SPC560D30x
SPC560D40x

32-bit MCU family built on the Power Architecture® for automotive body electronics applications

Datasheet – production data

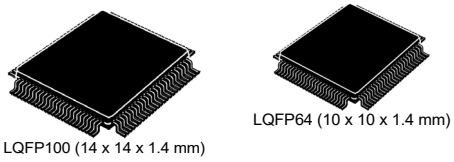

Features

- AEC-Q100 qualified
- High-performance up to 48 MHz e200z0h CPU
  - 32-bit Power Architecture® technology CPU
  - Variable length encoding (VLE)
- Memory
  - Up to 256 KB Code Flash with ECC
  - Up to 64 (4x16) KB Data Flash with ECC
  - Up to 16 KB SRAM with ECC
- Interrupts
  - 16 priority levels
  - Non-maskable interrupt (NMI)
  - Up to 38 external interrupts including 18 wakeup lines
- 16-channel eDMA
- GPIOs: 45 (LQFP64), 79 (LQFP100)
- Timer units
  - 4-channel 32-bit periodic interrupt timers
  - 4-channel 32-bit system timer module
  - System watchdog timer
  - 32-bit real-time clock timer
- 16-bit counter time-triggered I/Os
  - Up to 28 channels with PWM/MC/IC/OC
  - 5 independent counters
  - 27-channels with ADC trigger capability
- 12-bit analog-to-digital converter (ADC) with up to 33 channels
  - Up to 61 channels via external multiplexing
  - Individual conversion registers
  - Cross triggering unit (CTU)
- Dedicated diagnostic module for lighting
  - Advanced PWM generation
  - Time-triggered diagnostics
  - PWM-synchronized ADC measurements
- Communications interfaces
  - 1 FlexCAN interface (2.0B active) with 32 message buffers
  - 3 LINFlex/UART, 1 with DMA capability
  - 2 DSPI
- Clock generation
  - 4 to 16 MHz fast external crystal oscillator
  - 16 MHz fast internal RC oscillator
  - 128 kHz slow internal RC oscillator
  - Software-controlled FMPLL
  - Clock monitoring unit
- Exhaustive debugging capability
  - Nexus1 on all packages
  - Nexus2+ available on emulation device (SPC560B64B2-ENG)
- On-chip CAN/UART bootstrap loader
- Low power capabilities
  - Several low power mode configurations
  - Ultra-low power standby with RTC, SRAM and CAN monitoring
  - Fast wakeup schemes
- Single 5 V or 3.3 V supply
- Operates in ambient temperature range of -40 to 125 °C

Table 1. Device summary

Package	Part number	
	128 Kbyte code Flash	256 Kbyte code Flash
LQFP100	SPC560D30L3	SPC560D40L3
LQFP64	SPC560D30L1	SPC560D40L1

This is information on a product in full production. www.st.com

Contents

1 Introduction 4

1.1 Document overview 4

1.2 Description 4

2 Block diagram 6

3 Package pinouts and signal descriptions 9

3.1 Package pinouts 9

3.2 Pad configuration during reset phases 10

3.3 Voltage supply pins 10

3.4 Pad types 11

3.5 System pins 11

3.6 Functional ports 12

4 Electrical characteristics 24

4.1 Introduction 24

4.2 Parameter classification 24

4.3 NVUSRO register 25

4.3.1 NVUSRO[PAD3V5V] field description 25

4.3.2 NVUSRO[OSCILLATOR_MARGIN] field description 25

4.3.3 NVUSRO[WATCHDOG_EN] field description 25

4.4 Absolute maximum ratings 26

4.5 Recommended operating conditions 27

4.6 Thermal characteristics 29

4.6.1 Package thermal characteristics 29

4.6.2 Power considerations 29

4.7 I/O pad electrical characteristics 30

4.7.1 I/O pad types 30

4.7.2 I/O input DC characteristics 30

4.7.3 I/O output DC characteristics 32

4.7.4 Output pin transition times 34

4.7.5 I/O pad current specification 34

4.8 RESET electrical characteristics 38

4.9 Power management electrical characteristics 40
4.9.1 Voltage regulator electrical characteristics 40
4.9.2 Low voltage detector electrical characteristics 43
4.10 Power consumption 44
4.11 Flash memory electrical characteristics 45
4.11.1 Program/Erase characteristics 45
4.11.2 Flash power supply DC characteristics 47
4.11.3 Start-up/Switch-off timings 48
4.12 Electromagnetic compatibility (EMC) characteristics 48
4.12.1 Designing hardened software to avoid noise problems 48
4.12.2 Electromagnetic interference (EMI) 49
4.12.3 Absolute maximum ratings (electrical sensitivity) 49
4.13 Fast external crystal oscillator (4 to 16 MHz) electrical characteristics . . 50
4.14 FMPLL electrical characteristics 53
4.15 Fast internal RC oscillator (16 MHz) electrical characteristics 54
4.16 Slow internal RC oscillator (128 kHz) electrical characteristics 54
4.17 ADC electrical characteristics 55
4.17.1 Introduction 55
4.17.2 Input impedance and ADC accuracy 56
4.17.3 ADC electrical characteristics 61
4.18 On-chip peripherals 63
4.18.1 Current consumption 63
4.18.2 DSPI characteristics 64
4.18.3 JTAG characteristics 70

5 Package characteristics 72
5.1 ECOPACK® 72
5.2 Package mechanical data 72
5.2.1 LQFP100 72
5.2.2 LQFP64 74

6 Ordering information 75

Appendix A Acronyms and abbreviations 76

Revision history 78

1 Introduction

1.1 Document overview

This document describes the device features and highlights the important electrical and physical characteristics.

1.2 Description

These 32-bit automotive microcontrollers are a family of system-on-chip (SoC) devices designed to be central to the development of the next wave of central vehicle body controller, smart junction box, front module, peripheral body, door control and seat control applications.

This family is one of a series of next-generation integrated automotive microcontrollers based on the Power Architecture technology and designed specifically for embedded applications.

The advanced and cost-efficient e200z0h host processor core of this automotive controller family complies with the Power Architecture technology and only implements the VLE (variable-length encoding) APU (auxiliary processing unit) and provides improved code density. It operates at speed of up to 48 MHz and offers high performance processing optimized for low power consumption. It capitalizes on the available development infrastructure of current power architecture devices and is supported with software drivers, operating systems and configuration code to assist with the user's implementations.

The device platform has a single level of memory hierarchy and can support a wide range of on-chip static random access memory (SRAM) and internal flash memory.

Table 2. SPC560D30x and SPC560D40x device comparison

Feature	Device			
	SPC560D30L1	SPC560D30L3	SPC560D40L1	SPC560D40L3
CPU	e200z0h			
Execution speed	Static – up to 48 MHz			
Code flash memory	128 KB		256 KB	
Data flash memory	64 KB (4 × 16 KB)			
SRAM	12 KB		16 KB	
eDMA	16 ch			
ADC (12-bit)	16 ch	33 ch	16 ch	33 ch
CTU	16 ch			
Total timer I/O (1) eMIOS	14 ch, 16-bit	28 ch, 16-bit	14 ch, 16-bit	28 ch, 16-bit
Type X(2)	2 ch	5 ch	2 ch	5 ch
Type Y(3)	—	9 ch	—	9 ch
Type G(4)	7 ch	7 ch	7 ch	7 ch

Table 2. SPC560D30x and SPC560D40x device comparison (continued)

Feature	Device			
	SPC560D30L1	SPC560D30L3	SPC560D40L1	SPC560D40L3
Type H(5)	4 ch	7 ch	4 ch	7 ch
SCI (LINFlex)	3			
SPI (DSPI)	2			
CAN (FlexCAN)	1			
GPIO(6)	45	79	45	79
Debug	JTAG			
Package	LQFP64	LQFP100	LQFP64	LQFP100

1. Refer to eMIOS chapter of device reference manual for information on the channel configuration and functions.
2. Type X = MC + MCB + OPWMT + OPWMB + OPWFMB + SAIC + SAOC
3. Type Y = OPWMT + OPWMB + SAIC + SAOC
4. Type G = MCB + IPWM + IPM + DAOC + OPWMT + OPWMB + OPWFMB + OPWMCB + SAIC + SAOC
5. Type H = IPWM + IPM + DAOC + OPWMT + OPWMB + SAIC + SAOC
6. I/O count based on multiplexing with peripherals.

2 Block diagram

Figure 1 shows a top-level block diagram of the SPC560D30x and SPC560D40x device series.

Figure 1. SPC560D30x and SPC560D40x series block diagram

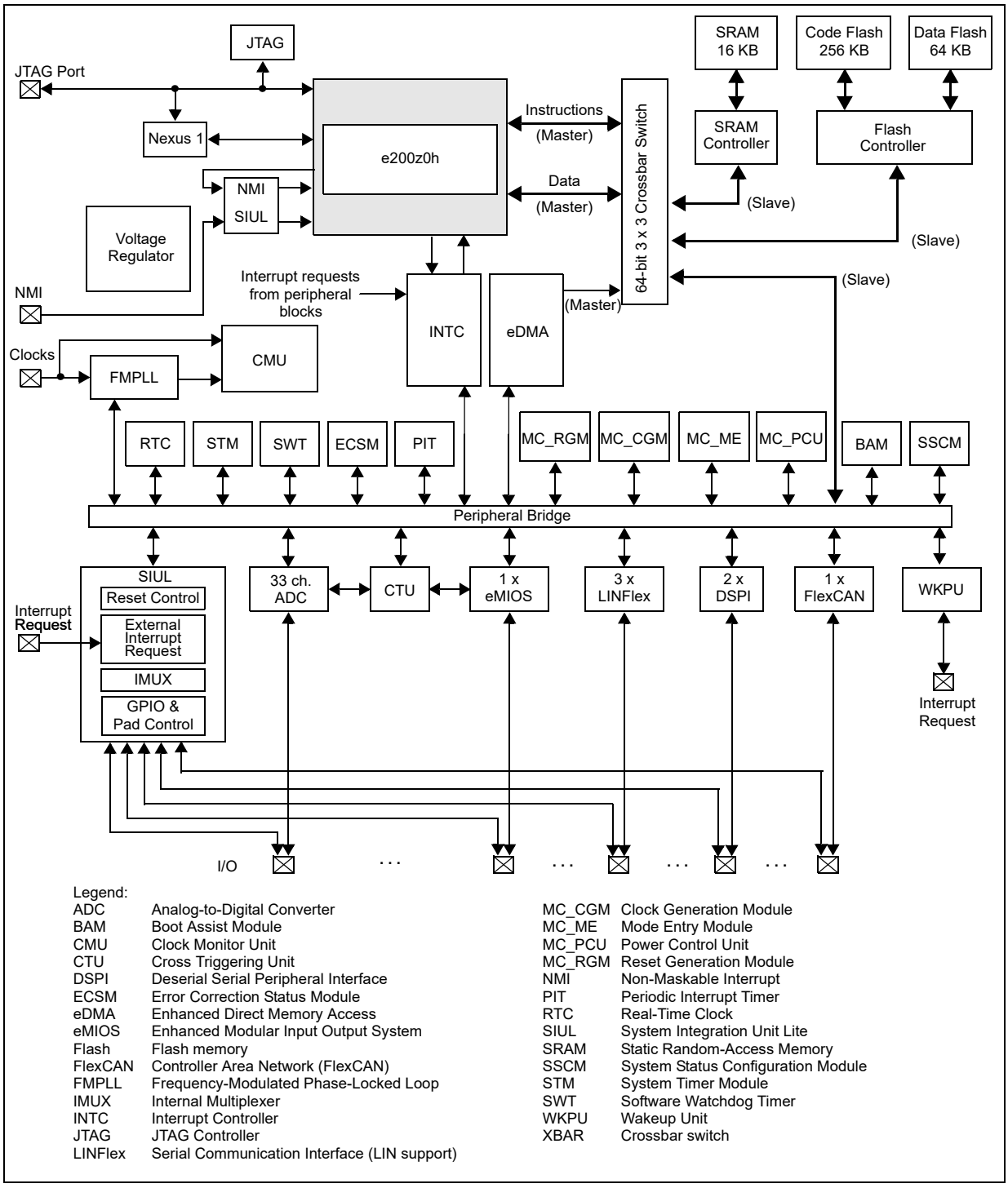

Legend:

ADC	Analog-to-Digital Converter	MC_CGM	Clock Generation Module
BAM	Boot Assist Module	MC_ME	Mode Entry Module
CMU	Clock Monitor Unit	MC_PCU	Power Control Unit
CTU	Cross Triggering Unit	MC_RGM	Reset Generation Module
DSPI	Deserial Serial Peripheral Interface	NMI	Non-Maskable Interrupt
ECSM	Error Correction Status Module	PIT	Periodic Interrupt Timer
eDMA	Enhanced Direct Memory Access	RTC	Real-Time Clock
eMIOS	Enhanced Modular Input Output System	SIUL	System Integration Unit Lite
Flash	Flash memory	SRAM	Static Random-Access Memory
FlexCAN	Controller Area Network (FlexCAN)	SSCM	System Status Configuration Module
FMPLL	Frequency-Modulated Phase-Locked Loop	STM	System Timer Module
IMUX	Internal Multiplexer	SWT	Software Watchdog Timer
INTC	Interrupt Controller	WKPU	Wakeup Unit
JTAG	JTAG Controller	XBAR	Crossbar switch
LINFlex	Serial Communication Interface (LIN support)		

Table 3 summarizes the functions of all the blocks present in the SPC560D30x and SPC560D40x series of microcontrollers. Note that the presence and number of blocks varies by device and package.

Table 3. SPC560D30x and SPC560D40x series block summary

Block	Function
Analog-to-digital converter (ADC)	Multi-channel, 12-bit analog-to-digital converter
Boot assist module (BAM)	A block of read-only memory containing VLE code which is executed according to the boot mode of the device
Clock generation module (MC_CGM)	Provides logic and control required for the generation of system and peripheral clocks
Clock monitor unit (CMU)	Monitors clock source (internal and external) integrity
Cross triggering unit (CTU)	Enables synchronization of ADC conversions with a timer event from the eMIOS or PIT
Crossbar switch (XBAR)	Supports simultaneous connections between two master ports and three slave ports. The crossbar supports a 32-bit address bus width and a 64-bit data bus width.
Deserial serial peripheral interface (DSPI)	Provides a synchronous serial interface for communication with external devices
Enhanced direct memory access (eDMA)	Performs complex data transfers with minimal intervention from a host processor via “*n*” programmable channels.
Enhanced modular input output system (eMIOS)	Provides the functionality to generate or measure events
Error correction status module (ECSM)	Provides a myriad of miscellaneous control functions for the device including program-visible information about configuration and revision levels, a reset status register, wakeup control for exiting sleep modes, and optional features such as information on memory errors reported by error-correcting codes
Flash memory	Provides non-volatile storage for program code, constants and variables
FlexCAN (controller area network)	Supports the standard CAN communications protocol
Frequency-modulated phase-locked loop (FMPLL)	Generates high-speed system clocks and supports programmable frequency modulation
Internal multiplexer (IMUX) SIU subblock	Allows flexible mapping of peripheral interface on the different pins of the device
Interrupt controller (INTC)	Provides priority-based preemptive scheduling of interrupt requests
JTAG controller (JTAGC)	Provides the means to test chip functionality and connectivity while remaining transparent to system logic when not in test mode
LINFlex controller	Manages a high number of LIN (Local Interconnect Network protocol) messages efficiently with a minimum of CPU load
Mode entry module (MC_ME)	Provides a mechanism for controlling the device operational mode and mode transition sequences in all functional states. It also manages the power control unit, reset generation module, clock generation module, and holds the configuration, control and status registers accessible for applications
Non-maskable interrupt (NMI)	Handles external events which produces an immediate response, such as power down detection

Table 3. SPC560D30x and SPC560D40x series block summary (continued)

Block	Function
Periodic interrupt timer (PIT)	Produces periodic interrupts and triggers
Power control unit (MC_PCU)	Reduces the overall power consumption by disconnecting parts of the device from the power supply via a power switching device; device components are grouped into sections called “power domains” which are controlled by the PCU
Real-time counter (RTC)	Provides a free-running counter and interrupt generation capability that can be used for timekeeping applications
Reset generation module (MC_RGM)	Centralizes reset sources and manages the device reset sequence of the device
Static random-access memory (SRAM)	Provides storage for program code, constants, and variables
System integration unit lite (SIUL)	Provides control over all the electrical pad controls and up 32 ports with 16-bits of bidirectional, general-purpose input and output signals and supports up to 32 external interrupts with trigger event configuration
System status and configuration module (SSCM)	Provides system configuration and status data (such as memory size and status, device mode and security status), device identification data, debug status port enable and selection, and bus and peripheral abort enable/disable
System timer module (STM)	Provides a set of output compare events to support AUTOSAR (Automotive Open System Architecture) and operating system tasks
Software watchdog timer (SWT)	Provides protection from runaway code
Wakeup unit (WKPU)	Supports up to 18 external sources that can generate interrupts or wakeup events, of which one can cause non-maskable interrupt requests or wakeup events.

3 Package pinouts and signal descriptions

3.1 Package pinouts

The available LQFP pinouts are provided in the following figures. For pin signal descriptions, refer to *Table 6*.

Figure 2 shows the SPC560D30x and SPC560D40x in the LQFP100 package.

Figure 2. LQFP100 LQFP pin configuration (top view)

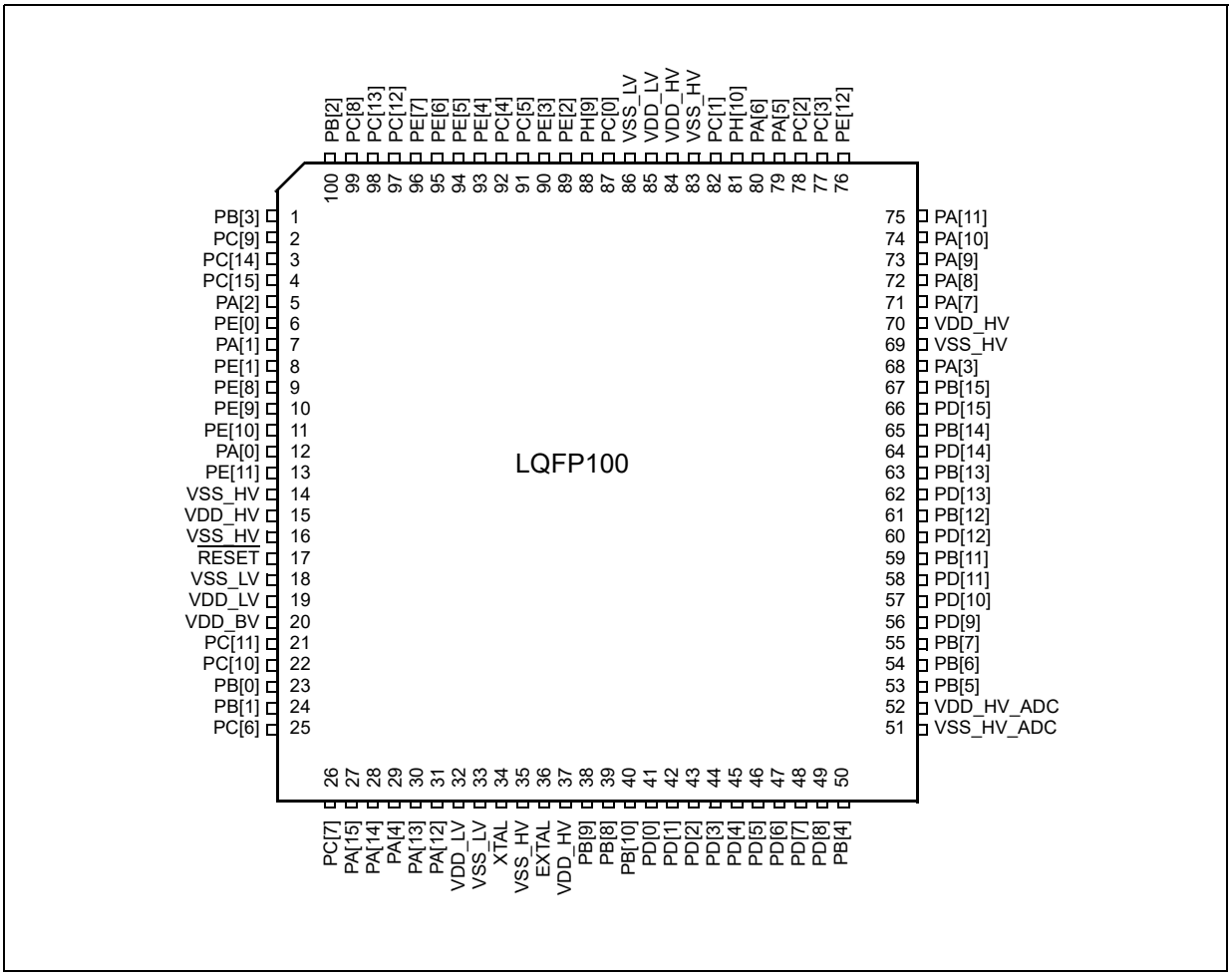

Figure 3 shows the SPC560D30x and SPC560D40x in the LQFP64 package.

Figure 3. LQFP64 LQFP pin configuration (top view)

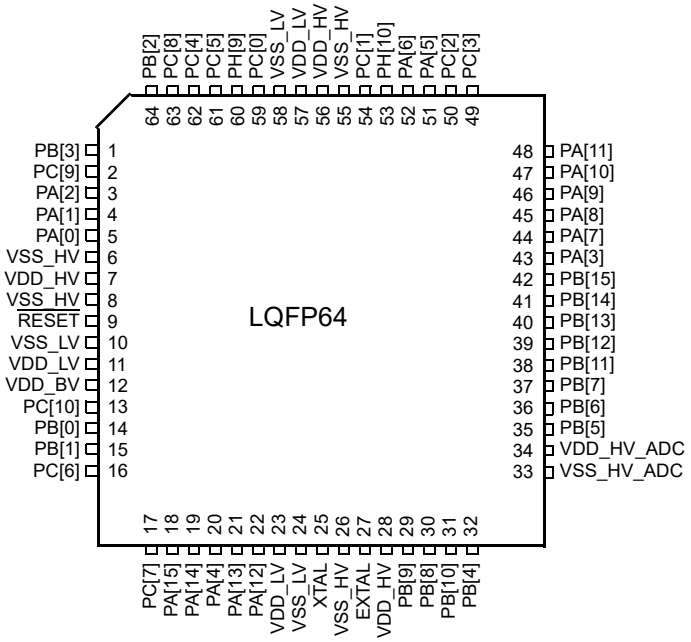

3.2 Pad configuration during reset phases

All pads have a fixed configuration under reset.

During the power-up phase, all pads are forced to tristate.

After power-up phase, all pads are forced to tristate with the following exceptions:

- PA[9] (FAB) is pull-down. Without external strong pull-up the device starts fetching from flash.
- PA[8] (ABS[0]) is pull-up.
- RESET pad is driven low. This is pull-up only after PHASE2 reset completion.
- JTAG pads (TCK, TMS and TDI) are pull-up while TDO remains tristate.
- Precise ADC pads (PB[7:4] and PD[11:0]) are left tristate (no output buffer available).
- Main oscillator pads (EXTAL, XTAL) are tristate.

3.3 Voltage supply pins

Voltage supply pins are used to provide power to the device. Two dedicated pins are used for 1.2 V regulator stabilization.

Table 4. Voltage supply pin descriptions

Port pin	Function	Pin number	
		LQFP64	LQFP100
VDD_HV	Digital supply voltage	7, 28, 34, 56	15, 37, 52, 70, 84
VSS_HV	Digital ground	6, 8, 26, 33, 55	14, 16, 35, 51, 69, 83
VDD_LV	1.2 V decoupling pins. Decoupling capacitor must be connected between these pins and the nearest V_{SS_LV} pin(1)	11, 23, 57	19, 32, 85
VSS_LV	1.2 V decoupling pins. Decoupling capacitor must be connected between these pins and the nearest V_{DD_LV} pin(1)	10, 24, 58	18, 33, 86
VDD_BV	Internal regulator supply voltage	12	20

1. A decoupling capacitor must be placed between each of the three VDD_LV/VSS_LV supply pairs to ensure stable voltage (refer the *Section 4.5: Recommended operating conditions* in the device datasheet for details).

3.4 Pad types

In the device the following types of pads are available for system pins and functional port pins:

S = Slow (1)

M = Medium (1) (2)

F = Fast (1) (2)

I = Input only with analog feature (1)

J = Input/Output (‘S’ pad) with analog feature

X = Oscillator

3.5 System pins

The system pins are listed in *Table 5*.

1. Refer, *Section 4.7: I/O pad electrical characteristics* in the device datasheet for details.
2. All medium and fast pads are in slow configuration by default at reset and can be configured as fast or medium (see the PCR[SRC] description in the device reference manual).

Table 5. System pin descriptions

Port pin	Function	I/O direction	Pad type	RESET configuration	Pin number	
					LQFP64	LQFP100
$\overline{\text{RESET}}$	Bidirectional reset with Schmitt-Trigger characteristics and noise filter	I/O	M	Input, weak pull-up only after PHASE2	9	17
EXTAL	Analog output of the oscillator amplifier circuit, when the oscillator is not in bypass mode. Analog input for the clock generator when the oscillator is in bypass mode(1)	I/O	X	Tristate	27	36
XTAL	Analog input of the oscillator amplifier circuit. Needs to be grounded if oscillator is used in bypass mode(1)	I	X	Tristate	25	34

1. Refer to the relevant section of the device datasheet.

3.6 Functional ports

The functional port pins are listed in *Table 6*.

Table 6. Functional port pin descriptions

Port pin	PCR	Alternate function(1)	Function	Peripheral	I/O direction(2)	Pad type	RESET configuration	Pin number	
								LQFP64	LQFP100
Port A									
PA[0]	PCR[0]	AF0 AF1 AF2 AF3 —	GPIO[0] E0UC[0] CLKOUT E0UC[13] WKPU[19](3)	SIUL eMIOS_0 CGL eMIOS_0 WKPU	I/O I/O O I/O I	M	Tristate	5	12
PA[1]	PCR[1]	AF0 AF1 AF2 AF3 — —	GPIO[1] E0UC[1] — — NMI(4) WKPU[2](3)	SIUL eMIOS_0 — — WKPU WKPU	I/O I/O — — I I	S	Tristate	4	7
PA[2]	PCR[2]	AF0 AF1 AF2 AF3 —	GPIO[2] E0UC[2] — MA[2] WKPU[3](3)	SIUL eMIOS_0 — ADC WKPU	I/O I/O — O I	S	Tristate	3	5

Table 6. Functional port pin descriptions (continued)

Port pin	PCR	Alternate function[1]	Function	Peripheral	I/O direction[2]	Pad type	RESET configuration	Pin number	
								LQFP64	LQFP100
PA[3]	PCR[3]	AF0 AF1 AF2 AF3 — —	GPIO[3] E0UC[3] — CS4_0 EIRQ[0] ADC1_S[0]	SIUL eMIOS_0 — DSPI_0 SIUL ADC	I/O I/O — I/O I I	S	Tristate	43	68
PA[4]	PCR[4]	AF0 AF1 AF2 AF3 —	GPIO[4] E0UC[4] — CS0_1 WKPU[9][3]	SIUL eMIOS_0 — DSPI_1 WKPU	I/O I/O — I/O I	S	Tristate	20	29
PA[5]	PCR[5]	AF0 AF1 AF2 AF3	GPIO[5] E0UC[5] — —	SIUL eMIOS_0 — —	I/O I/O — —	M	Tristate	51	79
PA[6]	PCR[6]	AF0 AF1 AF2 AF3 —	GPIO[6] E0UC[6] — CS1_1 EIRQ[1]	SIUL eMIOS_0 — DSPI_1 SIUL	I/O I/O — I/O I	S	Tristate	52	80
PA[7]	PCR[7]	AF0 AF1 AF2 AF3 — —	GPIO[7] E0UC[7] — — EIRQ[2] ADC1_S[1]	SIUL eMIOS_0 — — SIUL ADC	I/O I/O — — I I	S	Tristate	44	71
PA[8]	PCR[8]	AF0 AF1 AF2 AF3 — N/A[5]	GPIO[8] E0UC[8] E0UC[14] — EIRQ[3] ABS[0]	SIUL eMIOS_0 eMIOS_0 — SIUL BAM	I/O I/O — — I I	S	Input, weak pull-up	45	72
PA[9]	PCR[9]	AF0 AF1 AF2 AF3 N/A[5]	GPIO[9] E0UC[9] — CS2_1 FAB	SIUL eMIOS_0 — DSPI_1 BAM	I/O I/O — I/O I	S	Pull-down	46	73

Table 6. Functional port pin descriptions (continued)

Port pin	PCR	Alternate function[1]	Function	Peripheral	I/O direction[2]	Pad type	RESET configuration	Pin number	
								LQFP64	LQFP100
PA[10]	PCR[10]	AF0 AF1 AF2 AF3 —	GPIO[10] E0UC[10] — LIN2TX ADC1_S[2]	SIUL eMIOS_0 — LINFlex_2 ADC	I/O I/O — O I	S	Tristate	47	74
PA[11]	PCR[11]	AF0 AF1 AF2 AF3 — — —	GPIO[11] E0UC[11] — — EIRQ[16] ADC1_S[3] LIN2RX	SIUL eMIOS_0 — — SIUL ADC LINFlex_2	I/O I/O — — I I I	S	Tristate	48	75
PA[12]	PCR[12]	AF0 AF1 AF2 AF3 — —	GPIO[12] — — — EIRQ[17] SIN_0	SIUL — — — SIUL DSPI_0	I/O — — — I I	S	Tristate	22	31
PA[13]	PCR[13]	AF0 AF1 AF2 AF3	GPIO[13] SOUT_0 — CS3_1	SIUL DSPI_0 — DSPI_1	I/O O — I/O	M	Tristate	21	30
PA[14]	PCR[14]	AF0 AF1 AF2 AF3 —	GPIO[14] SCK_0 CS0_0 E0UC[0] EIRQ[4]	SIUL DSPI_0 DSPI_0 eMIOS_0 SIUL	I/O I/O I/O I/O I	M	Tristate	19	28
PA[15]	PCR[15]	AF0 AF1 AF2 AF3 —	GPIO[15] CS0_0 SCK_0 E0UC[1] WKPU[10][3]	SIUL DSPI_0 DSPI_0 eMIOS_0 WKPU	I/O I/O I/O I/O I	M	Tristate	18	27
Port B									
PB[0]	PCR[16]	AF0 AF1 AF2 AF3	GPIO[16] CAN0TX — LIN2TX	SIUL FlexCAN_0 — LINFlex_2	I/O O — O	M	Tristate	14	23

Table 6. Functional port pin descriptions (continued)

Port pin	PCR	Alternate function[1]	Function	Peripheral	I/O direction[2]	Pad type	RESET configuration	Pin number	
								LQFP64	LQFP100
PB[1]	PCR[17]	AF0 AF1 AF2 AF3 — —	GPIO[17] — — LIN0RX WKPU[4][3] CAN0RX	SIUL — — LINFlex_0 WKPU FlexCAN_0	I/O — — I I I	S	Tristate	15	24
PB[2]	PCR[18]	AF0 AF1 AF2 AF3	GPIO[18] LIN0TX — —	SIUL LINFlex_0 — —	I/O O — —	M	Tristate	64	100
PB[3]	PCR[19]	AF0 AF1 AF2 AF3 — —	GPIO[19] — — — WKPU[11][3] LIN0RX	SIUL — — — WKPU LINFlex_0	I/O — — — I I	S	Tristate	1	1
PB[4]	PCR[20]	AF0 AF1 AF2 AF3 —	GPIO[20] — — — ADC1_P[0]	SIUL — — — ADC	I — — — I	I	Tristate	32	50
PB[5]	PCR[21]	AF0 AF1 AF2 AF3 —	GPIO[21] — — — ADC1_P[1]	SIUL — — — ADC	I — — — I	I	Tristate	35	53
PB[6]	PCR[22]	AF0 AF1 AF2 AF3 —	GPIO[22] — — — ADC1_P[2]	SIUL — — — ADC	I — — — I	I	Tristate	36	54
PB[7]	PCR[23]	AF0 AF1 AF2 AF3 —	GPIO[23] — — — ADC1_P[3]	SIUL — — — ADC	I — — — I	I	Tristate	37	55

Table 6. Functional port pin descriptions (continued)

Port pin	PCR	Alternate function[1]	Function	Peripheral	I/O direction[2]	Pad type	RESET configuration	Pin number	
								LQFP64	LQFP100
PB[8]	PCR[24]	AF0 AF1 AF2 AF3 — —	GPIO[24] — — — ADC1_S[4] WKPU[25][3]	SIUL — — — ADC WKPU	I — — — I I	I	Tristate	30	39
PB[9]	PCR[25]	AF0 AF1 AF2 AF3 — —	GPIO[25] — — — ADC1_S[5] WKPU[26][3]	SIUL — — — ADC WKPU	I — — — I I	I	Tristate	29	38
PB[10]	PCR[26]	AF0 AF1 AF2 AF3 — —	GPIO[26] — — — ADC1_S[6] WKPU[8][3]	SIUL — — — ADC WKPU	I/O — — — I I	J	Tristate	31	40
PB[11]	PCR[27]	AF0 AF1 AF2 AF3 —	GPIO[27] E0UC[3] — CS0_0 ADC1_S[12]	SIUL eMIOS_0 — DSPI_0 ADC	I/O I/O — I/O I	J	Tristate	38	59
PB[12]	PCR[28]	AF0 AF1 AF2 AF3 —	GPIO[28] E0UC[4] — CS1_0 ADC1_X[0]	SIUL eMIOS_0 — DSPI_0 ADC	I/O I/O — O I	J	Tristate	39	61
PB[13]	PCR[29]	AF0 AF1 AF2 AF3 —	GPIO[29] E0UC[5] — CS2_0 ADC1_X[1]	SIUL eMIOS_0 — DSPI_0 ADC	I/O I/O — O I	J	Tristate	40	63
PB[14]	PCR[30]	AF0 AF1 AF2 AF3 —	GPIO[30] E0UC[6] — CS3_0 ADC1_X[2]	SIUL eMIOS_0 — DSPI_0 ADC	I/O I/O — O I	J	Tristate	41	65

Table 6. Functional port pin descriptions (continued)

Port pin	PCR	Alternate function[1]	Function	Peripheral	I/O direction[2]	Pad type	RESET configuration	Pin number	
								LQFP64	LQFP100
PB[15]	PCR[31]	AF0 AF1 AF2 AF3 —	GPIO[31] E0UC[7] — CS4_0 ADC1_X[3]	SIUL eMIOS_0 — DSPI_0 ADC	I/O I/O — O I	J	Tristate	42	67
Port C									
PC[0][6]	PCR[32]	AF0 AF1 AF2 AF3	GPIO[32] — TDI —	SIUL — JTAGC —	I/O — I —	M	Input, weak pull-up	59	87
PC[1][6]	PCR[33]	AF0 AF1 AF2 AF3	GPIO[33] — TDO —	SIUL — JTAGC —	I/O — O —	F	Tristate	54	82
PC[2]	PCR[34]	AF0 AF1 AF2 AF3 —	GPIO[34] SCK_1 — — EIRQ[5]	SIUL DSPI_1 — — SIUL	I/O I/O — — I	M	Tristate	50	78
PC[3]	PCR[35]	AF0 AF1 AF2 AF3 —	GPIO[35] CS0_1 MA[0] — EIRQ[6]	SIUL DSPI_1 ADC — SIUL	I/O I/O O — I	S	Tristate	49	77
PC[4]	PCR[36]	AF0 AF1 AF2 AF3 — —	GPIO[36] — — — SIN_1 EIRQ[18]	SIUL — — — DSPI_1 SIUL	I/O — — — I I	M	Tristate	62	92
PC[5]	PCR[37]	AF0 AF1 AF2 AF3 —	GPIO[37] SOUT_1 — — EIRQ[7]	SIUL DSPI_1 — — SIUL	I/O O — — I	M	Tristate	61	91

Table 6. Functional port pin descriptions (continued)

Port pin	PCR	Alternate function[1]	Function	Peripheral	I/O direction[2]	Pad type	RESET configuration	Pin number	
								LQFP64	LQFP100
PC[6]	PCR[38]	AF0 AF1 AF2 AF3	GPIO[38] LIN1TX — —	SIUL LINFlex_1 — —	I/O O — —	S	Tristate	16	25
PC[7]	PCR[39]	AF0 AF1 AF2 AF3 — —	GPIO[39] — — — LIN1RX WKPU[12][3]	SIUL — — — LINFlex_1 WKPU	I/O — — — I I	S	Tristate	17	26
PC[8]	PCR[40]	AF0 AF1 AF2 AF3	GPIO[40] LIN2TX E0UC[3] —	SIUL LINFlex_2 eMIOS_0 —	I/O O I/O —	S	Tristate	63	99
PC[9]	PCR[41]	AF0 AF1 AF2 AF3 — —	GPIO[41] — E0UC[7] — LIN2RX WKPU[13][3]	SIUL — eMIOS_0 — LINFlex_2 WKPU	I/O — I/O — I I	S	Tristate	2	2
PC[10]	PCR[42]	AF0 AF1 AF2 AF3	GPIO[42] — — MA[1]	SIUL — — ADC	I/O — — O	M	Tristate	13	22
PC[11]	PCR[43]	AF0 AF1 AF2 AF3 —	GPIO[43] — — MA[2] WKPU[5][3]	SIUL — — ADC WKPU	I/O — — O I	S	Tristate	—	21
PC[12]	PCR[44]	AF0 AF1 AF2 AF3 —	GPIO[44] E0UC[12] — — EIRQ[19]	SIUL eMIOS_0 — — SIUL	I/O I/O — — I	M	Tristate	—	97
PC[13]	PCR[45]	AF0 AF1 AF2 AF3	GPIO[45] E0UC[13] — —	SIUL eMIOS_0 — —	I/O I/O — —	S	Tristate	—	98

Table 6. Functional port pin descriptions (continued)

Port pin	PCR	Alternate function[1]	Function	Peripheral	I/O direction[2]	Pad type	RESET configuration	Pin number	
								LQFP64	LQFP100
PC[14]	PCR[46]	AF0 AF1 AF2 AF3 —	GPIO[46] E0UC[14] — — EIRQ[8]	SIUL eMIOS_0 — — SIUL	I/O I/O — — I	S	Tristate	—	3
PC[15]	PCR[47]	AF0 AF1 AF2 AF3 —	GPIO[47] E0UC[15] — — EIRQ[20]	SIUL eMIOS_0 — — SIUL	I/O I/O — — I	M	Tristate	—	4
Port D									
PD[0]	PCR[48]	AF0 AF1 AF2 AF3 — —	GPIO[48] — — — WKPU[27][3] ADC1_P[4]	SIUL — — — WKPU ADC	I — — — I I	I	Tristate	—	41
PD[1]	PCR[49]	AF0 AF1 AF2 AF3 — —	GPIO[49] — — — WKPU[28][3] ADC1_P[5]	SIUL — — — WKPU ADC	I — — — I I	I	Tristate	—	42
PD[2]	PCR[50]	AF0 AF1 AF2 AF3 —	GPIO[50] — — — ADC1_P[6]	SIUL — — — ADC	I — — — I	I	Tristate	—	43
PD[3]	PCR[51]	AF0 AF1 AF2 AF3 —	GPIO[51] — — — ADC1_P[7]	SIUL — — — ADC	I — — — I	I	Tristate	—	44

Table 6. Functional port pin descriptions (continued)

Port pin	PCR	Alternate function[1]	Function	Peripheral	I/O direction[2]	Pad type	RESET configuration	Pin number	
								LQFP64	LQFP100
PD[4]	PCR[52]	AF0 AF1 AF2 AF3 —	GPIO[52] — — — ADC1_P[8]	SIUL — — — ADC	I — — — I	I	Tristate	—	45
PD[5]	PCR[53]	AF0 AF1 AF2 AF3 —	GPIO[53] — — — ADC1_P[9]	SIUL — — — ADC	I — — — I	I	Tristate	—	46
PD[6]	PCR[54]	AF0 AF1 AF2 AF3 —	GPIO[54] — — — ADC1_P[10]	SIUL — — — ADC	I — — — I	I	Tristate	—	47
PD[7]	PCR[55]	AF0 AF1 AF2 AF3 —	GPIO[55] — — — ADC1_P[11]	SIUL — — — ADC	I — — — I	I	Tristate	—	48
PD[8]	PCR[56]	AF0 AF1 AF2 AF3 —	GPIO[56] — — — ADC1_P[12]	SIUL — — — ADC	I — — — I	I	Tristate	—	49
PD[9]	PCR[57]	AF0 AF1 AF2 AF3 —	GPIO[57] — — — ADC1_P[13]	SIUL — — — ADC	I — — — I	I	Tristate	—	56
PD[10]	PCR[58]	AF0 AF1 AF2 AF3 —	GPIO[58] — — — ADC1_P[14]	SIUL — — — ADC	I — — — I	I	Tristate	—	57

Table 6. Functional port pin descriptions (continued)

Port pin	PCR	Alternate function[1]	Function	Peripheral	I/O direction[2]	Pad type	RESET configuration	Pin number	
								LQFP64	LQFP100
PD[11]	PCR[59]	AF0 AF1 AF2 AF3 —	GPIO[59] — — — ADC1_P[15]	SIUL — — — ADC	I — — — I	I	Tristate	—	58
PD[12]	PCR[60]	AF0 AF1 AF2 AF3 —	GPIO[60] CS5_0 E0UC[24] — ADC1_S[8]	SIUL DSPI_0 eMIOS_0 — ADC	I/O O I/O — I	J	Tristate	—	60
PD[13]	PCR[61]	AF0 AF1 AF2 AF3 —	GPIO[61] CS0_1 E0UC[25] — ADC1_S[9]	SIUL DSPI_1 eMIOS_0 — ADC	I/O I/O I/O — I	J	Tristate	—	62
PD[14]	PCR[62]	AF0 AF1 AF2 AF3 —	GPIO[62] CS1_1 E0UC[26] — ADC1_S[10]	SIUL DSPI_1 eMIOS_0 — ADC	I/O O I/O — I	J	Tristate	—	64
PD[15]	PCR[63]	AF0 AF1 AF2 AF3 —	GPIO[63] CS2_1 E0UC[27] — ADC1_S[11]	SIUL DSPI_1 eMIOS_0 — ADC	I/O O I/O — I	J	Tristate	—	66
Port E									
PE[0]	PCR[64]	AF0 AF1 AF2 AF3 —	GPIO[64] E0UC[16] — — WKPU[6][3]	SIUL eMIOS_0 — — WKPU	I/O I/O — — I	S	Tristate	—	6
PE[1]	PCR[65]	AF0 AF1 AF2 AF3	GPIO[65] E0UC[17] — —	SIUL eMIOS_0 — —	I/O I/O — —	M	Tristate	—	8

Table 6. Functional port pin descriptions (continued)

Port pin	PCR	Alternate function[1]	Function	Peripheral	I/O direction[2]	Pad type	RESET configuration	Pin number	
								LQFP64	LQFP100
PE[2]	PCR[66]	AF0 AF1 AF2 AF3 — —	GPIO[66] E0UC[18] — — EIRQ[21] SIN_1	SIUL eMIOS_0 — — SIUL DSPI_1	I/O I/O — — I I	M	Tristate	—	89
PE[3]	PCR[67]	AF0 AF1 AF2 AF3	GPIO[67] E0UC[19] SOUT_1 —	SIUL eMIOS_0 DSPI_1 —	I/O I/O O —	M	Tristate	—	90
PE[4]	PCR[68]	AF0 AF1 AF2 AF3 —	GPIO[68] E0UC[20] SCK_1 — EIRQ[9]	SIUL eMIOS_0 DSPI_1 — SIUL	I/O I/O I/O — I	M	Tristate	—	93
PE[5]	PCR[69]	AF0 AF1 AF2 AF3	GPIO[69] E0UC[21] CS0_1 MA[2]	SIUL eMIOS_0 DSPI_1 ADC	I/O I/O I/O O	M	Tristate	—	94
PE[6]	PCR[70]	AF0 AF1 AF2 AF3 —	GPIO[70] E0UC[22] CS3_0 MA[1] EIRQ[22]	SIUL eMIOS_0 DSPI_0 ADC SIUL	I/O I/O O O I	M	Tristate	—	95
PE[7]	PCR[71]	AF0 AF1 AF2 AF3 —	GPIO[71] E0UC[23] CS2_0 MA[0] EIRQ[23]	SIUL eMIOS_0 DSPI_0 ADC SIUL	I/O I/O O O I	M	Tristate	—	96
PE[8]	PCR[72]	AF0 AF1 AF2 AF3	GPIO[72] — E0UC[22] —	SIUL — eMIOS_0 —	I/O — I/O —	M	Tristate	—	9
PE[9]	PCR[73]	AF0 AF1 AF2 AF3 —	GPIO[73] — E0UC[23] — WKPU[7][3]	SIUL — eMIOS_0 — WKPU	I/O — I/O — I	S	Tristate	—	10

Table 6. Functional port pin descriptions (continued)

Port pin	PCR	Alternate function[1]	Function	Peripheral	I/O direction[2]	Pad type	RESET configuration	Pin number	
								LQFP64	LQFP100
PE[10]	PCR[74]	AF0 AF1 AF2 AF3 —	GPIO[74] — CS3_1 — EIRQ[10]	SIUL — DSPI_1 — SIUL	I/O — O — I	S	Tristate	—	11
PE[11]	PCR[75]	AF0 AF1 AF2 AF3 —	GPIO[75] E0UC[24] CS4_1 — WKPU[14][3]	SIUL eMIOS_0 DSPI_1 — WKPU	I/O I/O O — I	S	Tristate	—	13
PE[12]	PCR[76]	AF0 AF1 AF2 AF3 — —	GPIO[76] — — — ADC1_S[7] EIRQ[11]	SIUL — — — ADC SIUL	I/O — — — I I	S	Tristate	—	76
Port H									
PH[9][6]	PCR[121]	AF0 AF1 AF2 AF3	GPIO[121] — TCK —	SIUL — JTAGC —	I/O — I —	S	Input, weak pull-up	60	88
PH[10][6]	PCR[122]	AF0 AF1 AF2 AF3	GPIO[122] — TMS —	SIUL — JTAGC —	I/O — I —	S	Input, weak pull-up	53	81

1. Alternate functions are chosen by setting the values of the PCR.PA bitfields inside the SIUL module. PCR.PA = 00 ® AF0; PCR.PA = 01 ® AF1; PCR.PA = 10 ® AF2; PCR.PA = 11 ® AF3. This is intended to select the output functions; to use one of the input functions, the PCR.IBE bit must be written to ‘1’, regardless of the values selected in the PCR.PA bitfields. For this reason, the value corresponding to an input only function is reported as “—”.
2. Multiple inputs are routed to all respective modules internally. The input of some modules must be configured by setting the values of the PSMIO.PADSELx bitfields inside the SIUL module.
3. All WKPU pins also support external interrupt capability. See “wakeup unit” chapter of the device reference manual for further details.
4. NMI has higher priority than alternate function. When NMI is selected, the PCR.AF field is ignored.
5. “Not applicable” because these functions are available only while the device is booting. Refer to “BAM” chapter of the device reference manual for details.
6. Out of reset all the functional pins except PC[0:1] and PH[9:10] are available to the user as GPIO.
   PC[0:1] are available as JTAG pins (TDI and TDO respectively).
   PH[9:10] are available as JTAG pins (TCK and TMS respectively).
   If the user configures these JTAG pins in GPIO mode the device is no longer compliant with IEEE 1149.1 2001.

4 Electrical characteristics

4.1 Introduction

This section contains electrical characteristics of the device as well as temperature and power considerations.

This product contains devices to protect the inputs against damage due to high static voltages. However, it is advisable to take precautions to avoid application of any voltage higher than the specified maximum rated voltages.

To enhance reliability, unused inputs can be driven to an appropriate logic voltage level (V_{DD} or V_{SS}). This can be done by the internal pull-up or pull-down, which is provided by the product for most general purpose pins.

The parameters listed in the following tables represent the characteristics of the device and its demands on the system.

In the tables where the device logic provides signals with their respective timing characteristics, the symbol “CC” for Controller Characteristics is included in the Symbol column.

In the tables where the external system must provide signals with their respective timing characteristics to the device, the symbol “SR” is for System Requirement is included in the Symbol column.

4.2 Parameter classification

The electrical parameters shown in this supplement are guaranteed by various methods. To give the customer a better understanding, the classifications listed in *Table 7* are used and the parameters are tagged accordingly in the tables where appropriate.

Table 7. Parameter classifications

Classification tag	Tag description
P	Those parameters are guaranteed during production testing on each individual device.
C	Those parameters are achieved by the design characterization by measuring a statistically relevant sample size across process variations.
T	Those parameters are achieved by design characterization on a small sample size from typical devices under typical conditions unless otherwise noted. All values shown in the typical column are within this category.
D	Those parameters are derived mainly from simulations.

Note: The classification is shown in the column labeled “C” in the parameter tables where appropriate.

4.3 NVUSRO register

Bit values in the Non-Volatile User Options (NVUSRO) Register control portions of the device configuration, namely electrical parameters such as high voltage supply and oscillator margin, as well as digital functionality (watchdog enable/disable after reset).

For a detailed description of the NVUSRO register, refer to the device reference manual.

4.3.1 NVUSRO[PAD3V5V] field description

The DC electrical characteristics are dependent on the PAD3V5V bit value. *Table 8* shows how NVUSRO[PAD3V5V] controls the device configuration.

Table 8. PAD3V5V field description

Value [1]	Description
0	High voltage supply is 5.0 V
1	High voltage supply is 3.3 V

1. Default manufacturing value is ‘1’. Value can be programmed by customer in Shadow Flash.

4.3.2 NVUSRO[OSCILLATOR_MARGIN] field description

The fast external crystal oscillator consumption is dependent on the OSCILLATOR_MARGIN bit value. *Table 9* shows how NVUSRO[OSCILLATOR_MARGIN] controls the device configuration.

Table 9. OSCILLATOR_MARGIN field description

Value [1]	Description
0	Low consumption configuration (4 MHz/8 MHz)
1	High margin configuration (4 MHz/16 MHz)

1. Default manufacturing value is ‘1’. Value can be programmed by customer in Shadow Flash.

4.3.3 NVUSRO[WATCHDOG_EN] field description

The watchdog enable/disable configuration after reset is dependent on the WATCHDOG_EN bit value. *Table 10* shows how NVUSRO[WATCHDOG_EN] controls the device configuration.

Table 10. WATCHDOG_EN field description

Value [1]	Description
0	Disable after reset
1	Enable after reset

1. Default manufacturing value is ‘1’. Value can be programmed by customer in Shadow Flash.

4.4 Absolute maximum ratings

Table 11. Absolute maximum ratings

Symbol		Parameter	Conditions	Value		Unit
				Min	Max	
V_{SS}	SR	Digital ground on VSS_HV pins	—	0	0	V
V_{DD}	SR	Voltage on VDD_HV pins with respect to ground (V_{SS})	—	–0.3	6.0	V
V_{SS_LV}	SR	Voltage on VSS_LV (low voltage digital supply) pins with respect to ground (V_{SS})	—	V_{SS} – 0.1	V_{SS} + 0.1	V
V_{DD_BV}	SR	Voltage on VDD_BV (regulator supply) pin with respect to ground (V_{SS})	—	–0.3	6.0	V
			Relative to V_{DD}	V_{DD} – 0.3	V_{DD} + 0.3	
V_{SS_ADC}	SR	Voltage on VSS_HV_ADC (ADC reference) pin with respect to ground (V_{SS})	—	V_{SS} – 0.1	V_{SS} + 0.1	V
V_{DD_ADC}	SR	Voltage on VDD_HV_ADC (ADC reference) pin with respect to ground (V_{SS})	—	–0.3	6.0	V
			Relative to V_{DD}	V_{DD} – 0.3	V_{DD} + 0.3	
V_{IN}	SR	Voltage on any GPIO pin with respect to ground (V_{SS})	—	–0.3	6.0	V
			Relative to V_{DD}	V_{DD} – 0.3	V_{DD} + 0.3	
I_{INJPAD}	SR	Injected input current on any pin during overload condition	—	–10	10	mA
I_{INJSUM}	SR	Absolute sum of all injected input currents during overload condition	—	–50	50	mA
I_{AVGSEG}	SR	Sum of all the static I/O current within a supply segment (1)	V_{DD} = 5.0 V ± 10%, PAD3V5V = 0	—	70	mA
			V_{DD} = 3.3 V ± 10%, PAD3V5V = 1	—	64	
I_{CORELV}	SR	Low voltage static current sink through VDD_BV	—	—	150	mA
$T_{STORAGE}$	SR	Storage temperature	—	–55	150	°C

1. Supply segments are described in *Section 4.7.5: I/O pad current specification*.

Note: Stresses exceeding the recommended absolute maximum ratings may cause permanent damage to the device. This is a stress rating only and functional operation of the device at these or any other conditions above those indicated in the operational sections of this specification are not implied. Exposure to absolute maximum rating conditions for extended periods may affect device reliability. During overload conditions ($V_{IN} > V_{DD}$ or $V_{IN} < V_{SS}$), the voltage on pins with respect to ground (V_{SS}) must not exceed the recommended values.

4.5 Recommended operating conditions

Table 12. Recommended operating conditions (3.3 V)

Symbol		C	Parameter	Conditions	Value		Unit
					Min	Max	
V_{SS}	SR	—	Digital ground on VSS_HV pins	—	0	0	V
V_{DD}(1)	SR	—	Voltage on VDD_HV pins with respect to ground (V_{SS})	—	3.0	3.6	V
V_{SS_LV}(2)	SR	—	Voltage on VSS_LV (low voltage digital supply) pins with respect to ground (V_{SS})	—	V_{SS} – 0.1	V_{SS} + 0.1	V
V_{DD_BV}(3)	SR	—	Voltage on VDD_BV pin (regulator supply) with respect to ground (V_{SS})	—	3.0	3.6	V
				Relative to V_{DD}	V_{DD} – 0.1	V_{DD} + 0.1	
V_{SS_ADC}	SR	—	Voltage on VSS_HV_ADC (ADC reference) pin with respect to ground (V_{SS})	—	V_{SS} – 0.1	V_{SS} + 0.1	V
V_{DD_ADC}(4)	SR	—	Voltage on VDD_HV_ADC pin (ADC reference) with respect to ground (V_{SS})	—	3.0(5)	3.6	V
				Relative to V_{DD}	V_{DD} – 0.1	V_{DD} + 0.1	
V_{IN}	SR	—	Voltage on any GPIO pin with respect to ground (V_{SS})	—	V_{SS} – 0.1	—	V
				Relative to V_{DD}	—	V_{DD} + 0.1	
I_{INJPAD}	SR	—	Injected input current on any pin during overload condition	—	–5	5	mA
I_{INJSUM}	SR	—	Absolute sum of all injected input currents during overload condition	—	–50	50	mA
TV_{DD}	SR	—	V_{DD} slope to ensure correct power up(6)	—	3.0(7)	250×10^3 (0.25 [V/µs])	V/s

1. 100 nF capacitance needs to be provided between each V_{DD}/V_{SS} pair.
2. 330 nF capacitance needs to be provided between each V_{DD_LV}/V_{SS_LV} supply pair.
3. 470 nF capacitance needs to be provided between V_{DD_BV} and the nearest V_{SS_LV} (higher value may be needed depending on external regulator characteristics).
4. 100 nF capacitance needs to be provided between V_{DD_ADC}/V_{SS_ADC} pair.
5. Full electrical specification cannot be guaranteed when voltage drops below 3.0 V. In particular, ADC electrical characteristics and I/Os DC electrical specification may not be guaranteed. When voltage drops below V_{LVDHVL}, device is reset.
6. Guaranteed by device validation.
7. Minimum value of TV_{DD} must be guaranteed until V_{DD} reaches 2.6 V (maximum value of V_{PORH}).

Table 13. Recommended operating conditions (5.0 V)

Symbol		C	Parameter	Conditions	Value		Unit
					Min	Max	
V_{SS}	SR	—	Digital ground on VSS_HV pins	—	0	0	V
V_{DD}(1)	SR	—	Voltage on VDD_HV pins with respect to ground (V_{SS})	—	4.5	5.5	V
				Voltage drop(2)	3.0	5.5	
V_{SS_LV}(3)	SR	—	Voltage on VSS_LV (low voltage digital supply) pins with respect to ground (V_{SS})	—	V_{SS} – 0.1	V_{SS} + 0.1	V
V_{DD_BV}(4)	SR	—	Voltage on VDD_BV pin (regulator supply) with respect to ground (V_{SS})	—	4.5	5.5	V
				Voltage drop(2)	3.0	5.5	
				Relative to V_{DD}	V_{DD} – 0.1	V_{DD} + 0.1	
V_{SS_ADC}	SR	—	Voltage on VSS_HV_ADC (ADC reference) pin with respect to ground (V_{SS}	—	V_{SS} – 0.1	V_{SS} + 0.1	V
V_{DD_ADC}(5)	SR	—	Voltage on VDD_HV_ADC pin (ADC reference) with respect to ground (V_{SS})	—	4.5	5.5	V
				Voltage drop(2)	3.0	5.5	
				Relative to V_{DD}	V_{DD} – 0.1	V_{DD} + 0.1	
V_{IN}	SR	—	Voltage on any GPIO pin with respect to ground (V_{SS})	—	V_{SS} – 0.1	—	V
				Relative to V_{DD}	—	V_{DD} + 0.1	
I_{INJPAD}	SR	—	Injected input current on any pin during overload condition	—	–5	5	mA
I_{INJSUM}	SR	—	Absolute sum of all injected input currents during overload condition	—	–50	50	mA
TV_{DD}	SR	—	V_{DD} slope to ensure correct power up(6)	—	3.0(7)	250 x 10^3 (0.25 [V/ µs])	V/ s

1. 100 nF capacitance needs to be provided between each V_{DD}/V_{SS} pair.
2. Full device operation is guaranteed by design when the voltage drops below 4.5 V down to 3.6 V. However, certain analog electrical characteristics will not be guaranteed to stay within the stated limits.
3. 330 nF capacitance needs to be provided between each V_{DD_LV}/V_{SS_LV} supply pair.
4. 470 nF capacitance needs to be provided between V_{DD_BV} and the nearest V_{SS_LV} (higher value may be needed depending on external regulator characteristics).
5. 100 nF capacitance needs to be provided between V_{DD_ADC}/V_{SS_ADC} pair.
6. Guaranteed by device validation.
7. Minimum value of TV_{DD} must be guaranteed until V_{DD} reaches 2.6 V (maximum value of V_{PORH}).

Note: SRAM data retention is guaranteed with V_{DD_LV} not below 1.08 V.

4.6 Thermal characteristics

4.6.1 Package thermal characteristics

Table 14. LQFP thermal characteristics

Symbol		C	Parameter	Conditions[1]		Value	Unit
$R_{\theta JA}$	CC	D	Thermal resistance, junction-to-ambient natural convection[2]	Single-layer board —1s	LQFP64	72.1	°C/W
					LQFP100	65.2	
				Four-layer board — 2s2p	LQFP64	57.3	
					LQFP100	51.8	
$R_{\theta JB}$	CC	D	Thermal resistance, junction-to-board[3]	Four-layer board — 2s2p	LQFP64	44.1	°C/W
					LQFP100	41.3	
$R_{\theta JC}$	CC	D	Thermal resistance, junction-to-case[4]	Single-layer board — 1s	LQFP64	26.5	°C/W
					LQFP100	23.9	
				Four-layer board — 2s2p	LQFP64	26.2	
					LQFP100	23.7	
Ψ_{JB}	CC	D	Junction-to-board thermal characterization parameter, natural convection	Single-layer board — 1s	LQFP64	41	°C/W
					LQFP100	41.6	
				Four-layer board — 2s2p	LQFP64	43	
					LQFP100	43.4	
Ψ_{JC}	CC	D	Junction-to-case thermal characterization parameter, natural convection	Single-layer board — 1s	LQFP64	11.5	°C/W
					LQFP100	10.4	
				Four-layer board — 2s2p	LQFP64	11.1	
					LQFP100	10.2	

1. V_{DD} = 3.3 V ± 10% / 5.0 V ± 10%, T_A = –40 to 125 °C
2. Junction-to-ambient thermal resistance determined per JEDEC JESD51-3 and JESD51-7. Thermal test board meets JEDEC specification for this package. When Greek letters are not available, the symbols are typed as R_{thJA}.
3. Junction-to-board thermal resistance determined per JEDEC JESD51-8. Thermal test board meets JEDEC specification for the specified package. When Greek letters are not available, the symbols are typed as R_{thJB}.
4. Junction-to-case at the top of the package determined using MIL-STD 883 Method 1012.1. The cold plate temperature is used for the case temperature. Reported value includes the thermal resistance of the interface layer. When Greek letters are not available, the symbols are typed as R_{thJC}.

Note: Thermal characteristics are targets based on simulation that are subject to change per device characterization.

4.6.2 Power considerations

The average chip-junction temperature, T_J, in degrees Celsius, may be calculated using *Equation 1*:

Equation 1 $T_J = T_A + (P_D \times R_{\theta JA})$

Where:

T_A is the ambient temperature in °C.

$R_{\theta JA}$ is the package junction-to-ambient thermal resistance, in °C/W.

P_D is the sum of P_{INT} and $P_{I/O}$ ($P_D = P_{INT} + P_{I/O}$).

P_{INT} is the product of I_{DD} and V_{DD}, expressed in watts. This is the chip internal power.

$P_{I/O}$ represents the power dissipation on input and output pins; user determined.

Most of the time for the applications, $P_{I/O} < P_{INT}$ and may be neglected. On the other hand, $P_{I/O}$ may be significant, if the device is configured to continuously drive external modules and/or memories.

An approximate relationship between P_D and T_J (if $P_{I/O}$ is neglected) is given by:

Equation 2 $P_D = K / (T_J + 273\ °C)$

Therefore, solving equations *1* and *2*:

Equation 3 $K = P_D \times (T_A + 273\ °C) + R_{\theta JA} \times P_D^2$

Where:

K is a constant for the particular part, which may be determined from *Equation 3* by measuring P_D (at equilibrium) for a known T_A. Using this value of K, the values of P_D and T_J may be obtained by solving equations *1* and *2* iteratively for any value of T_A.

4.7 I/O pad electrical characteristics

4.7.1 I/O pad types

The device provides four main I/O pad types depending on the associated alternate functions:

- Slow pads — These pads are the most common pads, providing a good compromise between transition time and low electromagnetic emission.
- Medium pads — These pads provide transition fast enough for the serial communication channels with controlled current to reduce electromagnetic emission.
- Input only pads — These pads are associated to ADC channels (ADC_P[X]) providing low input leakage.

Medium pads can use slow configuration to reduce electromagnetic emission except for PC[1], that is medium only, at the cost of reducing AC performance.

4.7.2 I/O input DC characteristics

Table 15 provides input DC electrical characteristics as described in *Figure 4*.

Figure 4. Input DC electrical characteristics definition

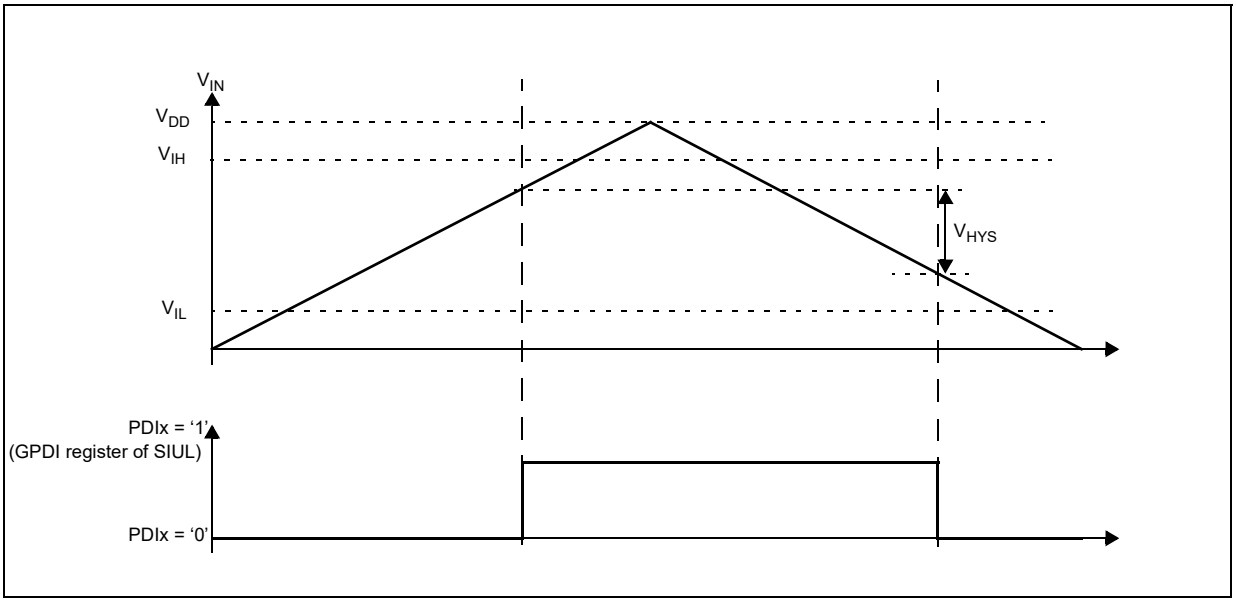

Table 15. I/O input DC electrical characteristics

Symbol		C	Parameter	Conditions[1]		Value			Unit
						Min	Typ	Max	
V_{IH}	SR	P	Input high level CMOS (Schmitt Trigger)	—		$0.65V_{DD}$	—	$V_{DD}+0.4$	V
V_{IL}	SR	P	Input low level CMOS (Schmitt Trigger)	—		–0.4	—	$0.35V_{DD}$	V
V_{HYS}	CC	C	Input hysteresis CMOS (Schmitt Trigger)	—		$0.1V_{DD}$	—	—	V
I_{LKG}	CC	D	Digital input leakage	No injection on adjacent pin	T_A = –40 °C	—	2	200	nA
		D			T_A = 25 °C	—	2	200	
		D			T_A = 85 °C	—	5	300	
		D			T_A = 105 °C	—	12	500	
		P			T_A = 125 °C	—	70	1000	
W_{FI}[2]	SR	P	Digital input filtered pulse	—		—	—	40	ns
W_{NFI}[2]	SR	P	Digital input not filtered pulse	—		1000	—	—	ns

1. V_{DD} = 3.3 V ± 10% / 5.0 V ± 10%, T_A = –40 to 125 °C, unless otherwise specified.
2. In the range from 40 to 1000 ns, pulses can be filtered or not filtered, according to the operating temperature and voltage.

4.7.3 I/O output DC characteristics

The following tables provide DC characteristics for bidirectional pads:

- *Table 16* provides weak pull figures. Both pull-up and pull-down resistances are supported.
- *Table 17* provides output driver characteristics for I/O pads when in SLOW configuration.
- *Table 18* provides output driver characteristics for I/O pads when in MEDIUM configuration.

Table 16. I/O pull-up/pull-down DC electrical characteristics

Symbol		C	Parameter	Conditions[1]		Value			Unit
						Min	Typ	Max	
$\lvert I_{WPU} \rvert$	CC	P	Weak pull-up current absolute value	$V_{IN} = V_{IL}$, V_{DD} = 5.0 V ± 10%	PAD3V5V = 0	10	—	150	µA
		C			PAD3V5V = 1[2]	10	—	250	
		P		$V_{IN} = V_{IL}$, V_{DD} = 3.3 V ± 10%	PAD3V5V = 1	10	—	150	
$\lvert I_{WPD} \rvert$	CC	P	Weak pull-down current absolute value	$V_{IN} = V_{IH}$, V_{DD} = 5.0 V ± 10%	PAD3V5V = 0	10	—	150	µA
		C			PAD3V5V = 1[2]	10	—	250	
		P		$V_{IN} = V_{IH}$, V_{DD} = 3.3 V ± 10%	PAD3V5V = 1	10	—	150	

1. V_{DD} = 3.3 V ± 10% / 5.0 V ± 10%, T_A = –40 to 125 °C, unless otherwise specified.
2. The configuration PAD3V5 = 1 when V_{DD} = 5 V is only a transient configuration during power-up. All pads but RESET are configured in input or in high impedance state.

Table 17. SLOW configuration output buffer electrical characteristics

Symbol		C	Parameter	Conditions[1]		Value			Unit
						Min	Typ	Max	
V_{OH}	CC	P	Output high level SLOW configuration	Push Pull	I_{OH} = –2 mA, V_{DD} = 5.0 V ± 10%, PAD3V5V = 0 (recommended)	$0.8V_{DD}$	—	—	V
		C			I_{OH} = –2 mA, V_{DD} = 5.0 V ± 10%, PAD3V5V = 1[2]	$0.8V_{DD}$	—	—	
		C			I_{OH} = –1 mA, V_{DD} = 3.3 V ± 10%, PAD3V5V = 1 (recommended)	$V_{DD} - 0.8$	—	—	
V_{OL}	CC	P	Output low level SLOW configuration	Push Pull	I_{OL} = 2 mA, V_{DD} = 5.0 V ± 10%, PAD3V5V = 0 (recommended)	—	—	$0.1V_{DD}$	V
		C			I_{OL} = 2 mA, V_{DD} = 5.0 V ± 10%, PAD3V5V = 1[2]	—	—	$0.1V_{DD}$	
		C			I_{OL} = 1 mA, V_{DD} = 3.3 V ± 10%, PAD3V5V = 1 (recommended)	—	—	0.5	

1. V_{DD} = 3.3 V ± 10% / 5.0 V ± 10%, T_A = –40 to 125 °C, unless otherwise specified.

2. The configuration PAD3V5 = 1 when V_{DD} = 5 V is only a transient configuration during power-up. All pads but RESET are configured in input or in high impedance state.

Table 18. MEDIUM configuration output buffer electrical characteristics

Symbol		C	Parameter	Conditions[1]		Value			Unit
						Min	Typ	Max	
V_{OH}	CC	C	Output high level MEDIUM configuration	Push Pull	I_{OH} = –3.8 mA, V_{DD} = 5.0 V ± 10%, PAD3V5V = 0	$0.8V_{DD}$	—	—	V
		P			I_{OH} = –2 mA, V_{DD} = 5.0 V ± 10%, PAD3V5V = 0 (recommended)	$0.8V_{DD}$	—	—	
		C			I_{OH} = –1 mA, V_{DD} = 5.0 V ± 10%, PAD3V5V = 1[2]	$0.8V_{DD}$	—	—	
		C			I_{OH} = –1 mA, V_{DD} = 3.3 V ± 10%, PAD3V5V = 1 (recommended)	V_{DD} – 0.8	—	—	
		C			I_{OH} = –100 µA, V_{DD} = 5.0 V ± 10%, PAD3V5V = 0	$0.8V_{DD}$	—	—	
V_{OL}	CC	C	Output low level MEDIUM configuration	Push Pull	I_{OL} = 3.8 mA, V_{DD} = 5.0 V ± 10%, PAD3V5V = 0	—	—	$0.2V_{DD}$	V
		P			I_{OL} = 2 mA, V_{DD} = 5.0 V ± 10%, PAD3V5V = 0 (recommended)	—	—	$0.1V_{DD}$	
		C			I_{OL} = 1 mA, V_{DD} = 5.0 V ± 10%, PAD3V5V = 1[2]	—	—	$0.1V_{DD}$	
		C			I_{OL} = 1 mA, V_{DD} = 3.3 V ± 10%, PAD3V5V = 1 (recommended)	—	—	0.5	
		C			I_{OL} = 100 µA, V_{DD} = 5.0 V ± 10%, PAD3V5V = 0	—	—	$0.1V_{DD}$	

1. V_{DD} = 3.3 V ± 10% / 5.0 V ± 10%, T_A = –40 to 125 °C, unless otherwise specified.
2. The configuration PAD3V5 = 1 when V_{DD} = 5 V is only a transient configuration during power-up. All pads but RESET are configured in input or in high impedance state.

4.7.4 Output pin transition times

Table 19. Output pin transition times

Symbol		C	Parameter	Conditions[1]		Value			Unit
						Min	Typ	Max	
t_{tr}	CC	D	Output transition time output pin[2] SLOW configuration	C_L = 25 pF	V_{DD} = 5.0 V ± 10%, PAD3V5V = 0	—	—	50	ns
		T		C_L = 50 pF		—	—	100	
		D		C_L = 100 pF		—	—	125	
		D		C_L = 25 pF	V_{DD} = 3.3 V ± 10%, PAD3V5V = 1	—	—	50	
		T		C_L = 50 pF		—	—	100	
		D		C_L = 100 pF		—	—	125	
t_{tr}	CC	D	Output transition time output pin[2] MEDIUM configuration	C_L = 25 pF	V_{DD} = 5.0 V ± 10%, PAD3V5V = 0 SIUL.PCRx.SRC = 1	—	—	10	ns
		T		C_L = 50 pF		—	—	20	
		D		C_L = 100 pF		—	—	40	
		D		C_L = 25 pF	V_{DD} = 3.3 V ± 10%, PAD3V5V = 1 SIUL.PCRx.SRC = 1	—	—	12	
		T		C_L = 50 pF		—	—	25	
		D		C_L = 100 pF		—	—	40	

1. V_{DD} = 3.3 V ± 10% / 5.0 V ± 10%, T_A = –40 to 125 °C, unless otherwise specified.
2. C_L includes device and package capacitances (C_{PKG} < 5 pF).

4.7.5 I/O pad current specification

The I/O pads are distributed across the I/O supply segment. Each I/O supply segment is associated to a V_{DD}/V_{SS} supply pair as described in *Table 20*.

Table 21 provides I/O consumption figures.

In order to ensure device reliability, the average current of the I/O on a single segment should remain below the I_{AVGSEG} maximum value.

Table 20. I/O supply segment

Package	Supply segment			
	1	2	3	4
LQFP100	pin 16 – pin 35	pin 37 – pin 69	pin 70 – pin 83	pin 84 – pin 15
LQFP64	pin 8 – pin 26	pin 28 – pin 55	pin 56 – pin 7	—

Table 21. I/O consumption

Symbol		C	Parameter	Conditions[1]		Value Min	Value Typ	Value Max	Unit
I_{SWTSLW}[2]	CC	D	Dynamic I/O current for SLOW configuration	C_L = 25 pF	V_{DD} = 5.0 V ± 10%, PAD3V5V = 0	—	—	20	mA
					V_{DD} = 3.3 V ± 10%, PAD3V5V = 1	—	—	16	
I_{SWTMED}[2]	CC	D	Dynamic I/O current for MEDIUM configuration	C_L = 25 pF	V_{DD} = 5.0 V ± 10%, PAD3V5V = 0	—	—	29	mA
					V_{DD} = 3.3 V ± 10%, PAD3V5V = 1	—	—	17	
I_{RMSSLW}	CC	D	Root mean square I/O current for SLOW configuration	C_L = 25 pF, 2 MHz	V_{DD} = 5.0 V ± 10%, PAD3V5V = 0	—	—	2.3	mA
				C_L = 25 pF, 4 MHz		—	—	3.2	
				C_L = 100 pF, 2 MHz		—	—	6.6	
				C_L = 25 pF, 2 MHz	V_{DD} = 3.3 V ± 10%, PAD3V5V = 1	—	—	1.6	
				C_L = 25 pF, 4 MHz		—	—	2.3	
				C_L = 100 pF, 2 MHz		—	—	4.7	
I_{RMSMED}	CC	D	Root mean square I/O current for MEDIUM configuration	C_L = 25 pF, 13 MHz	V_{DD} = 5.0 V ± 10%, PAD3V5V = 0	—	—	6.6	mA
				C_L = 25 pF, 40 MHz		—	—	13.4	
				C_L = 100 pF, 13 MHz		—	—	18.3	
				C_L = 25 pF, 13 MHz	V_{DD} = 3.3 V ± 10%, PAD3V5V = 1	—	—	5	
				C_L = 25 pF, 40 MHz		—	—	8.5	
				C_L = 100 pF, 13 MHz		—	—	11	
I_{AVGSEG}	SR	D	Sum of all the static I/O current within a supply segment	V_{DD} = 5.0 V ± 10%, PAD3V5V = 0		—	—	70	mA
				V_{DD} = 3.3 V ± 10%, PAD3V5V = 1		—	—	65	

1. V_{DD} = 3.3 V ± 10% / 5.0 V ± 10%, T_A = –40 to 125 °C, unless otherwise specified.
2. Stated maximum values represent peak consumption that lasts only a few ns during I/O transition.

Table 22 provides the weight of concurrent switching I/Os.

In order to ensure device functionality, the sum of the weight of concurrent switching I/Os on a single segment should remain below 100%.

Table 22. I/O weight

Pad	LQFP100/LQFP64			
	Weight 5 V		Weight 3.3 V	
	SRC[1]= 0	SRC = 1	SRC = 0	SRC = 1
PB[3]	9%	9%	10%	10%
PC[9]	8%	8%	10%	10%

Table 22. I/O weight (continued)

Pad	LQFP100/LQFP64			
	Weight 5 V		Weight 3.3 V	
	SRC[1]= 0	SRC = 1	SRC = 0	SRC = 1
PC[14]	8%	8%	10%	10%
PC[15]	8%	11%	9%	10%
PA[2]	8%	8%	9%	9%
PE[0]	7%	7%	9%	9%
PA[1]	7%	7%	8%	8%
PE[1]	7%	10%	8%	8%
PE[8]	6%	9%	8%	8%
PE[9]	6%	6%	7%	7%
PE[10]	6%	6%	7%	7%
PA[0]	5%	7%	6%	7%
PE[11]	5%	5%	6%	6%
PC[11]	7%	7%	9%	9%
PC[10]	8%	11%	9%	10%
PB[0]	8%	11%	9%	10%
PB[1]	8%	8%	10%	10%
PC[6]	8%	8%	10%	10%
PC[7]	8%	8%	10%	10%
PA[15]	8%	11%	9%	10%
PA[14]	7%	11%	9%	9%
PA[4]	7%	7%	8%	8%
PA[13]	7%	10%	8%	9%
PA[12]	7%	7%	8%	8%
PB[9]	1%	1%	1%	1%
PB[8]	1%	1%	1%	1%
PB[10]	5%	5%	6%	6%
PD[0]	1%	1%	1%	1%
PD[1]	1%	1%	1%	1%
PD[2]	1%	1%	1%	1%
PD[3]	1%	1%	1%	1%
PD[4]	1%	1%	1%	1%
PD[5]	1%	1%	1%	1%
PD[6]	1%	1%	1%	1%

Table 22. I/O weight (continued)

Pad	LQFP100/LQFP64			
	Weight 5 V		Weight 3.3 V	
	SRC[1]= 0	SRC = 1	SRC = 0	SRC = 1
PD[7]	1%	1%	1%	1%
PD[8]	1%	1%	1%	1%
PB[4]	1%	1%	1%	1%
PB[5]	1%	1%	1%	1%
PB[6]	1%	1%	1%	1%
PB[7]	1%	1%	1%	1%
PD[9]	1%	1%	1%	1%
PD[10]	1%	1%	1%	1%
PD[11]	1%	1%	1%	1%
PB[11]	9%	9%	11%	11%
PD[12]	8%	8%	10%	10%
PB[12]	8%	8%	10%	10%
PD[13]	8%	8%	9%	9%
PB[13]	8%	8%	9%	9%
PD[14]	7%	7%	9%	9%
PB[14]	7%	7%	8%	8%
PD[15]	7%	7%	8%	8%
PB[15]	6%	6%	7%	7%
PA[3]	6%	6%	7%	7%
PA[7]	4%	4%	5%	5%
PA[8]	4%	4%	5%	5%
PA[9]	4%	4%	5%	5%
PA[10]	5%	5%	6%	6%
PA[11]	5%	5%	6%	6%
PE[12]	5%	5%	6%	6%
PC[3]	5%	5%	6%	6%
PC[2]	5%	7%	6%	6%
PA[5]	5%	6%	5%	6%
PA[6]	4%	4%	5%	5%
PC[1]	5%	17%	4%	12%
PC[0]	6%	9%	7%	8%
PE[2]	7%	10%	8%	9%

Table 22. I/O weight (continued)

Pad	LQFP100/LQFP64			
	Weight 5 V		Weight 3.3 V	
	SRC[1]= 0	SRC = 1	SRC = 0	SRC = 1
PE[3]	7%	10%	9%	9%
PC[5]	8%	11%	9%	10%
PC[4]	8%	11%	9%	10%
PE[4]	8%	12%	10%	10%
PE[5]	8%	12%	10%	11%
PE[6]	9%	12%	10%	11%
PE[7]	9%	12%	10%	11%
PC[12]	9%	13%	11%	11%
PC[13]	9%	9%	11%	11%
PC[8]	9%	9%	11%	11%
PB[2]	9%	13%	11%	12%

1. SRC: “Slew Rate Control” bit in SIU_PCR

Note: *V_{DD} = 3.3 V ± 10% / 5.0 V ± 10%, T_A = -40 to 125 °C, unless otherwise specified.*

4.8 $\overline{\text{RESET}}$ electrical characteristics

The device implements a dedicated bidirectional $\overline{\text{RESET}}$ pin.

Figure 5. Start-up reset requirements

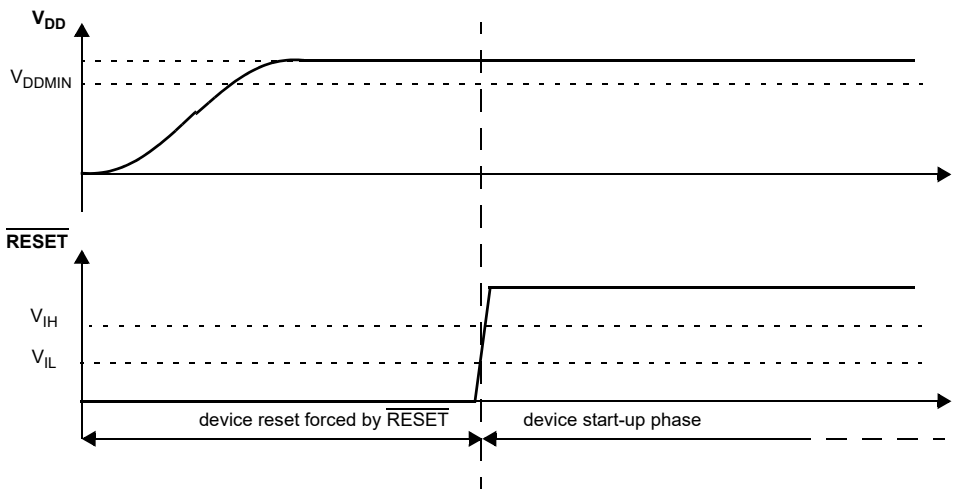

Figure 6. Noise filtering on reset signal

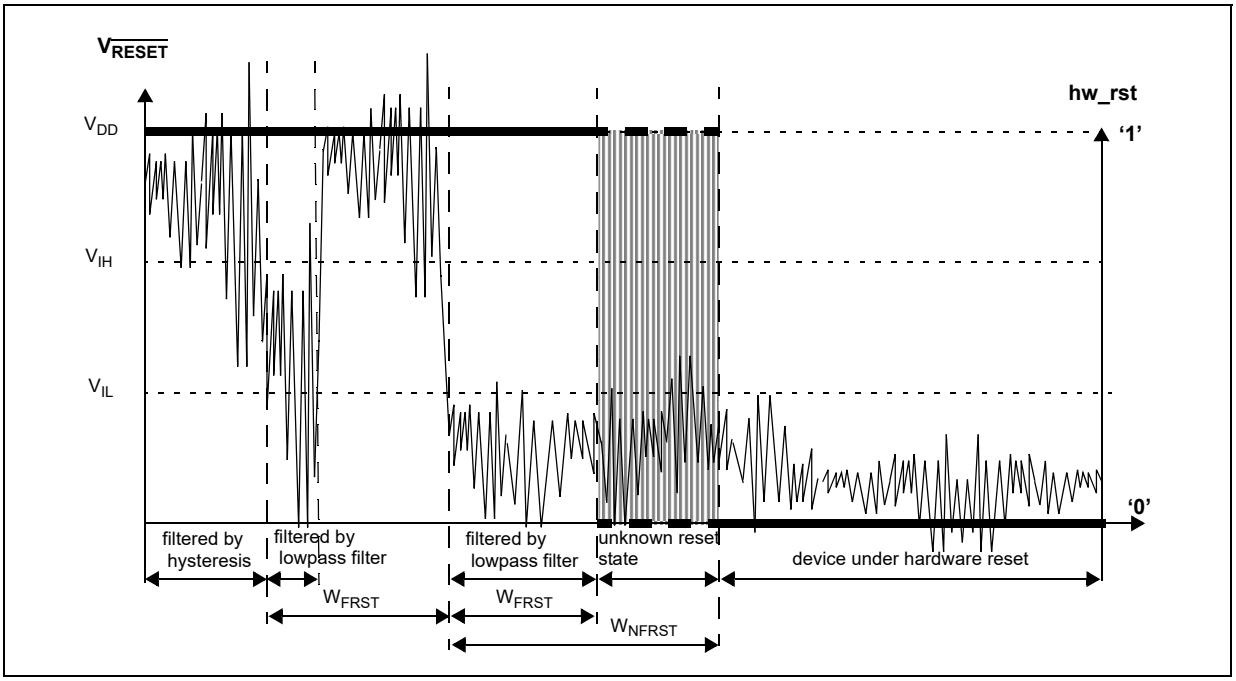

Table 23. Reset electrical characteristics

Symbol		C	Parameter	Conditions[1]	Value			Unit
					Min	Typ	Max	
V_{IH}	SR	P	Input High Level CMOS (Schmitt Trigger)	—	$0.65V_{DD}$	—	V_{DD} + 0.4	V
V_{IL}	SR	P	Input low Level CMOS (Schmitt Trigger)	—	–0.4	—	$0.35V_{DD}$	V
V_{HYS}	CC	C	Input hysteresis CMOS (Schmitt Trigger)	—	$0.1V_{DD}$	—	—	V
V_{OL}	CC	P	Output low level	Push Pull, I_{OL} = 2 mA, V_{DD} = 5.0 V ± 10%, PAD3V5V = 0 (recommended)	—	—	$0.1V_{DD}$	V
				Push Pull, I_{OL} = 1 mA, V_{DD} = 5.0 V ± 10%, PAD3V5V = 1[2]	—	—	$0.1V_{DD}$	
				Push Pull, I_{OL} = 1 mA, V_{DD} = 3.3 V ± 10%, PAD3V5V = 1 (recommended)	—	—	0.5	

Table 23. Reset electrical characteristics (continued)

Symbol		C	Parameter	Conditions[1]	Value			Unit
					Min	Typ	Max	
t_{tr}	CC	D	Output transition time output pin[3] MEDIUM configuration	C_L = 25 pF, V_{DD} = 5.0 V ± 10%, PAD3V5V = 0	—	—	10	ns
				C_L = 50 pF, V_{DD} = 5.0 V ± 10%, PAD3V5V = 0	—	—	20	
				C_L = 100 pF, V_{DD} = 5.0 V ± 10%, PAD3V5V = 0	—	—	40	
				C_L = 25 pF, V_{DD} = 3.3 V ± 10%, PAD3V5V = 1	—	—	12	
				C_L = 50 pF, V_{DD} = 3.3 V ± 10%, PAD3V5V = 1	—	—	25	
				C_L = 100 pF, V_{DD} = 3.3 V ± 10%, PAD3V5V = 1	—	—	40	
W_{FRST}	SR	P	$\overline{\text{RESET}}$ input filtered pulse	—	—	—	40	ns
W_{NFRST}	SR	P	$\overline{\text{RESET}}$ input not filtered pulse	—	1000	—	—	ns
$\lvert I_{WPU} \rvert$	CC	P	Weak pull-up current absolute value	V_{DD} = 3.3 V ± 10%, PAD3V5V = 1	10	—	150	µA
				V_{DD} = 5.0 V ± 10%, PAD3V5V = 0	10	—	150	
				V_{DD} = 5.0 V ± 10%, PAD3V5V = 1[4]	10	—	250	

1. V_{DD} = 3.3 V ± 10% / 5.0 V ± 10%, T_A = –40 to 125 °C, unless otherwise specified.
2. This is a transient configuration during power-up, up to the end of reset PHASE2 (refer to RGM module section of the device reference manual).
3. C_L includes device and package capacitance (C_{PKG} < 5 pF).
4. The configuration PAD3V5 = 1 when V_{DD} = 5 V is only transient configuration during power-up. All pads but RESET are configured in input or in high impedance state.

4.9 Power management electrical characteristics

4.9.1 Voltage regulator electrical characteristics

The device implements an internal voltage regulator to generate the low voltage core supply V_{DD_LV} from the high voltage ballast supply V_{DD_BV}. The regulator itself is supplied by the common I/O supply V_{DD}. The following supplies are involved:

- HV: High voltage external power supply for voltage regulator module. This must be provided externally through V_{DD} power pin.
- BV: High voltage external power supply for internal ballast module. This must be provided externally through V_{DD_BV} power pin. Voltage values should be aligned with V_{DD}.
- LV: Low voltage internal power supply for core, FMPLL and flash digital logic. This is generated by the internal voltage regulator but provided outside to connect stability

capacitor. It is further split into four main domains to ensure noise isolation between critical LV modules within the device:

- LV_COR: Low voltage supply for the core. It is also used to provide supply for FMPLL through double bonding.
- LV_CFLA: Low voltage supply for code flash module. It is supplied with dedicated ballast and shorted to LV_COR through double bonding.
- LV_DFLA: Low voltage supply for data flash module. It is supplied with dedicated ballast and shorted to LV_COR through double bonding.
- LV_PLL: Low voltage supply for FMPLL. It is shorted to LV_COR through double bonding.

Figure 7. Voltage regulator capacitance connection

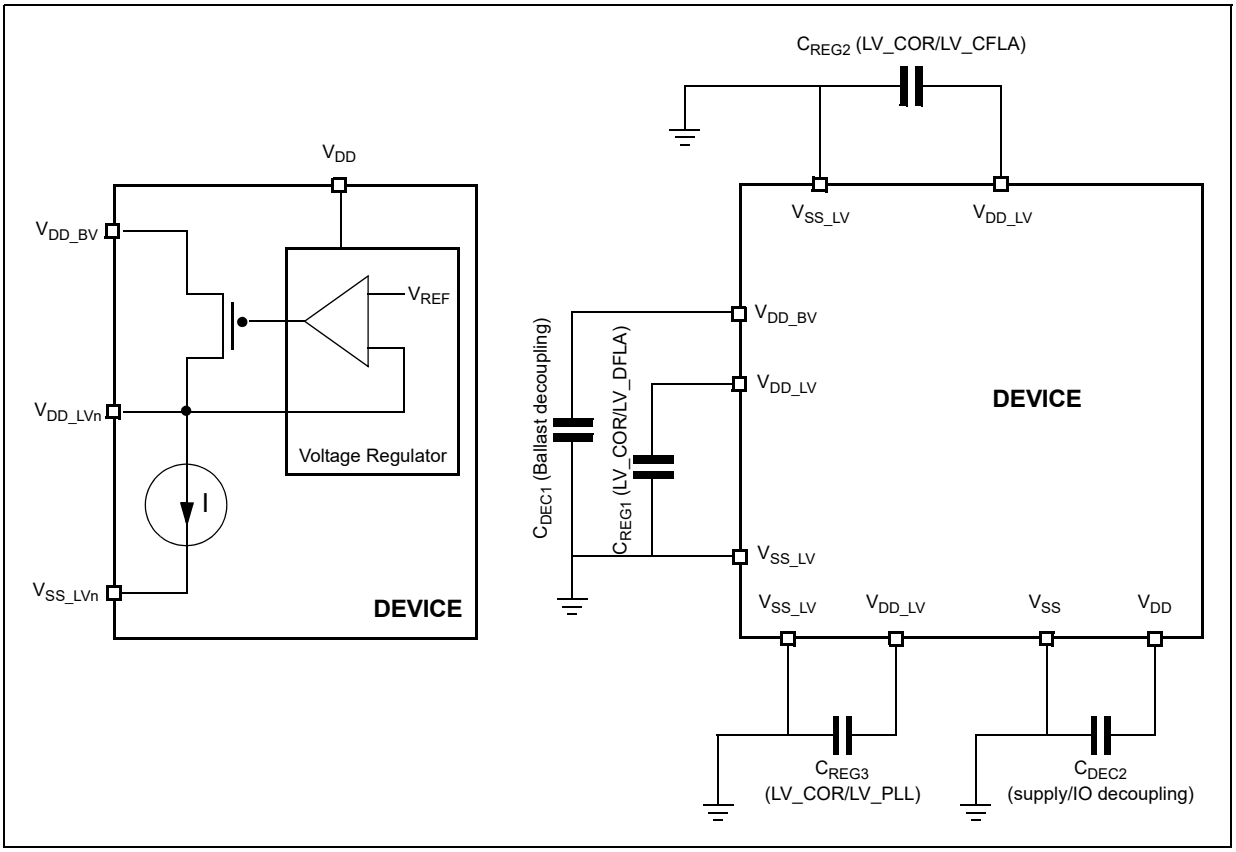

The internal voltage regulator requires external capacitance (C_{REGn}) to be connected to the device in order to provide a stable low voltage digital supply to the device. Capacitances should be placed on the board as near as possible to the associated pins. Care should also be taken to limit the serial inductance of the board to less than 5 nH.

Each decoupling capacitor must be placed between each of the three V_{DD_LV}/V_{SS_LV} supply pairs to ensure stable voltage (see *Section 4.5: Recommended operating conditions*).

Table 24. Voltage regulator electrical characteristics

Symbol		C	Parameter	Conditions[1]	Value			Unit
					Min	Typ	Max	
C_{REGn}	SR	—	Internal voltage regulator external capacitance	—	200	—	500	nF
R_{REG}	SR	—	Stability capacitor equivalent serial resistance	Range: 10 kHz to 20 MHz	—	—	0.2	W
C_{DEC1}	SR	—	Decoupling capacitance[2] ballast	V_{DD_BV}/V_{SS_LV} pair: V_{DD_BV} = 4.5 V to 5.5 V	100[3]	470[4]	—	nF
				V_{DD_BV}/V_{SS_LV} pair: V_{DD_BV} = 3 V to 3.6 V	400		—	
C_{DEC2}	SR	—	Decoupling capacitance regulator supply	V_{DD}/V_{SS} pair	10	100	—	nF
V_{MREG}	CC	T	Main regulator output voltage	Before exiting from reset	—	1.32	—	V
		P		After trimming	1.16	1.28	—	
I_{MREG}	SR	—	Main regulator current provided to V_{DD_LV} domain	—	—	—	150	mA
$I_{MREGINT}$	CC	D	Main regulator module current consumption	I_{MREG} = 200 mA	—	—	2	mA
				I_{MREG} = 0 mA	—	—	1	
V_{LPREG}	CC	P	Low-power regulator output voltage	After trimming	1.16	1.28	—	V
I_{LPREG}	SR	—	Low power regulator current provided to V_{DD_LV} domain	—	—	—	15	mA
$I_{LPREGINT}$	CC	D	Low-power regulator module current consumption	I_{LPREG} = 15 mA; T_A = 55°C	—	—	600	µA
		—		I_{LPREG} = 0 mA; T_A = 55°C	—	5	—	
V_{ULPREG}	CC	P	Ultra low power regulator output voltage	After trimming	1.16	1.28	—	V
I_{ULPREG}	SR	—	Ultra low power regulator current provided to V_{DD_LV} domain	—	—	—	5	mA
$I_{ULPREGINT}$	CC	D	Ultra low power regulator module current consumption	I_{ULPREG} = 5 mA; T_A = 55°C	—	—	100	µA
				I_{ULPREG} = 0 mA; T_A = 55 °C	—	2	—	
I_{DD_BV}	CC	D	In-rush average current on V_{DD_BV} during power-up[5]	—	—	—	300[6]	mA

1. V_{DD} = 3.3 V ± 10% / 5.0 V ± 10%, T_A = –40 to 125 °C, unless otherwise specified.
2. This capacitance value is driven by the constraints of the external voltage regulator supplying the V_{DD_BV} voltage. A typical value is in the range of 470 nF.
3. This value is acceptable to guarantee operation from 4.5 V to 5.5 V.

4. External regulator and capacitance circuitry must be capable of providing I_{DD_BV} while maintaining supply V_{DD_BV} in operating range.
5. In-rush average current is seen only for short time during power-up and on standby exit (maximum 20 µs, depending on external capacitances to be loaded).
6. The duration of the in-rush current depends on the capacitance placed on LV pins. BV decoupling capacitors must be sized accordingly. Refer to I_{MREG} value for minimum amount of current to be provided in cc.

4.9.2 Low voltage detector electrical characteristics

The device implements a power-on reset (POR) module to ensure correct power-up initialization, as well as five low voltage detectors (LVDs) to monitor the V_{DD} and the V_{DD_LV} voltage while device is supplied:

- POR monitors V_{DD} during the power-up phase to ensure device is maintained in a safe reset state (refer to RGM Destructive Event Status (RGM_DES) Register flag F_POR in device reference manual)
- LVDHV3 monitors V_{DD} to ensure device reset below minimum functional supply (refer to RGM Destructive Event Status (RGM_DES) Register flag F_LVD27 in device reference manual)
- LVDHV3B monitors V_{DD_BV} to ensure device reset below minimum functional supply (refer to RGM Destructive Event Status (RGM_DES) Register flag F_LVD27_VREG in device reference manual)
- LVDHV5 monitors V_{DD} when application uses device in the 5.0 V ± 10% range (refer to RGM Functional Event Status (RGM_FES) Register flag F_LVD45 in device reference manual)
- LVDLVCOR monitors power domain No. 1 (refer to RGM Destructive Event Status (RGM_DES) Register flag F_LVD12_PD1 in device reference manual)
- LVDLVBKP monitors power domain No. 0 (refer to RGM Destructive Event Status (RGM_DES) Register flag F_LVD12_PD0 in device reference manual)

Figure 8. Low voltage detector vs reset

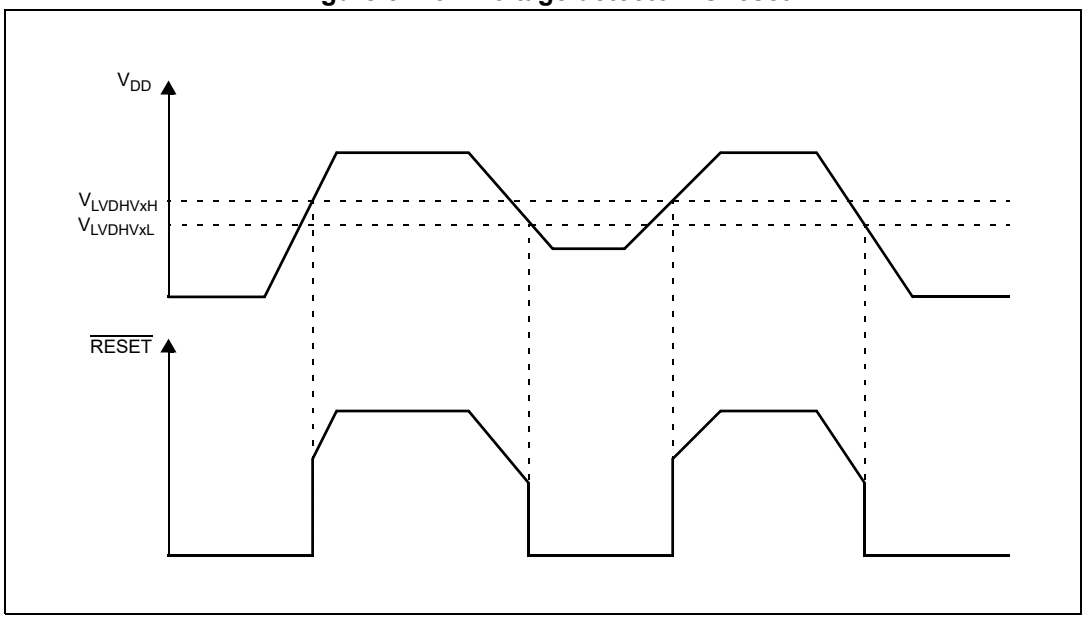

Table 25. Low voltage detector electrical characteristics

Symbol		C	Parameter	Conditions[1]	Value			Unit
					Min	Typ	Max	
V_{PORUP}	SR	P	Supply for functional POR module	T_A = 25 °C, after trimming	1.0	—	5.5	V
V_{PORH}	CC	P	Power-on reset threshold		1.5	—	2.6	V
$V_{LVDHV3H}$	CC	T	LVDHV3 low voltage detector high threshold		—	—	2.95	V
$V_{LVDHV3L}$	CC	P	LVDHV3 low voltage detector low threshold		2.6	—	2.9	V
$V_{LVDHV3BH}$	CC	P	LVDHV3B low voltage detector high threshold		—	—	2.95	V
$V_{LVDHV3BL}$	CC	P	LVDHV3B low voltage detector low threshold		2.6	—	2.9	V
$V_{LVDHV5H}$	CC	T	LVDHV5 low voltage detector high threshold		—	—	4.5	V
$V_{LVDHV5L}$	CC	P	LVDHV5 low voltage detector low threshold		3.8	—	4.4	V
$V_{LVDLVCORL}$	CC	P	LVDLVCOR low voltage detector low threshold		1.08	—	1.16	V
$V_{LVDLVBKPL}$	CC	P	LVDLVBKP low voltage detector low threshold		1.08	—	1.16	V

1. V_{DD} = 3.3 V ± 10% / 5.0 V ± 10%, T_A = –40 to 125 °C, unless otherwise specified.

4.10 Power consumption

Table 26 provides DC electrical characteristics for significant application modes. These values are indicative values; actual consumption depends on the application.

Table 26. Power consumption on VDD_BV and VDD_HV

Symbol		C	Parameter	Conditions[1]		Value			Unit
						Min	Typ	Max	
I_{DDMAX}[2]	CC	D	RUN mode maximum average current	—		—	90	130[3]	mA
I_{DDRUN}[4]	CC	T	RUN mode typical average current[5]	f_{CPU} = 8 MHz		—	7	—	mA
		T		f_{CPU} = 16 MHz		—	18	—	
		T		f_{CPU} = 32 MHz		—	29	—	
		P		f_{CPU} = 48 MHz		—	40	100	
I_{DDHALT}	CC	C	HALT mode current[6]	Slow internal RC oscillator (128 kHz) running	T_A = 25 °C	—	8	15	mA
		P			T_A = 125 °C	—	14	25	
I_{DDSTOP}	CC	P	STOP mode current[7]	Slow internal RC oscillator (128 kHz) running	T_A = 25 °C	—	180	700[8]	µA
		D			T_A = 55 °C	—	500	—	
		D			T_A = 85 °C	—	1	6[8]	mA
		D			T_A = 105 °C	—	2	9[8]	
		P			T_A = 125 °C	—	4.5	12[8]	

Table 26. Power consumption on VDD_BV and VDD_HV (continued)

Symbol		C	Parameter	Conditions[1]		Value			Unit
						Min	Typ	Max	
$I_{DDSTDBY}$	CC	P	STANDBY mode current[9]	Slow internal RC oscillator (128 kHz) running	T_A = 25 °C	—	30	100	µA
		D			T_A = 55 °C	—	75	—	
		D			T_A = 85 °C	—	180	700	
		D			T_A = 105 °C	—	315	1000	
		P			T_A = 125 °C	—	560	1700	

1. V_{DD} = 3.3 V ± 10% / 5.0 V ± 10%, T_A = –40 to 125 °C, unless otherwise specified.
2. Running consumption does not include I/Os toggling which is highly dependent on the application. The given value is thought to be a worst case value with all peripherals running, and code fetched from code flash while modify operation ongoing on data flash. Notice that this value can be significantly reduced by application: switch off not used peripherals (default), reduce peripheral frequency through internal prescaler, fetch from RAM most used functions, use low power mode when possible.
3. Higher current may be sinked by device during power-up and standby exit. Refer to in-rush average current on *Table 24*.
4. RUN current measured with typical application with accesses on both flash memory and SRAM.
5. Only for the “P” classification: Code fetched from SRAM: serial IPs CAN and LIN in loop-back mode, DSPI as Master, PLL as system clock (3 × Multiplier) peripherals on (eMIOS/CTU/ADC) and running at maximum frequency, periodic SW/WDG timer reset enabled.
6. Data flash power down. Code flash in low power. SIRC (128 kHz) and FIRC (16 MHz) on. 10 MHz XTAL clock. FlexCAN: 0 ON (clocked but no reception or transmission). LINFlex: instances: 0, 1, 2 ON (clocked but no reception or transmission), instance: 3 clocks gated. eMIOS: instance: 0 ON (16 channels on PA[0]–PA[11] and PC[12]–PC[15]) with PWM 20 kHz, instance: 1 clock gated. DSPI: instance: 0 (clocked but no communication). RTC/API ON.PIT ON. STM ON. ADC ON but no conversion except 2 analog watchdogs.
7. Only for the “P” classification: No clock, FIRC (16 MHz) off, SIRC (128 kHz) on, PLL off, HPVreg off, ULPVreg/LPVreg on. All possible peripherals off and clock gated. Flash in power down mode.
8. When going from RUN to STOP mode and the core consumption is > 6 mA, it is normal operation for the main regulator module to be kept on by the on-chip current monitoring circuit. This is most likely to occur with junction temperatures exceeding 125°C and under these circumstances, it is possible for the current to initially exceed the maximum STOP specification by up to 2 mA. After entering stop, the application junction temperature will reduce to the ambient level and the main regulator will be automatically switched off when the load current is below 6 mA.
9. Only for the “P” classification: ULPVreg on, HP/LPVreg off, 16 KB SRAM on, device configured for minimum consumption, all possible modules switched off.

4.11 Flash memory electrical characteristics

The data flash operation depends strongly on the code flash operation. If code flash is switched-off, the data flash is disabled.

4.11.1 Program/Erase characteristics

Table 27 shows the program and erase characteristics.

Table 27. Program and erase specifications (code flash)

Symbol		C	Parameter	Value				Unit
				Min	Typ[1]	Initial max[2]	Max[3]	
$t_{dwprogram}$	CC	C	Double word (64-bits) program time[4]	—	22	50	500	µs
$t_{16Kpperase}$	CC	C	16 KB block preprogram and erase time	—	300	500	5000	ms

Table 27. Program and erase specifications (code flash) (continued)

Symbol		C	Parameter	Value				Unit
				Min	Typ(1)	Initial max(2)	Max(3)	
$t_{32Kpperase}$	CC	C	32 KB block preprogram and erase time	—	400	600	5000	ms
$t_{128Kpperase}$	CC	C	128 KB block preprogram and erase time	—	800	1300	7500	ms
t_{esus}	CC	C	Erase suspend latency	—	—	30	30	µs

1. Typical program and erase times assume nominal supply values and operation at 25 °C. All times are subject to change pending device characterization.
2. Initial factory condition: < 100 program/erase cycles, 25 °C, typical supply voltage.
3. The maximum program and erase times occur after the specified number of program/erase cycles. These maximum values are characterized but not guaranteed.
4. Actual hardware programming times. This does not include software overhead.

Table 28. Program and erase specifications (data flash)

Symbol		C	Parameter	Value				Unit
				Min	Typ(1)	Initial max(2)	Max(3)	
$t_{swprogram}$	CC	C	Single word (32-bits) program time(4)	—	30	70	300	µs
$t_{16Kpperase}$	CC	C	16 KB block preprogram and erase time	—	700	800	1500	ms
t_{Bank_D}	CC	C	64 KB block preprogram and erase time	—	1900	2300	4800	ms

1. Typical program and erase times assume nominal supply values and operation at 25 °C. All times are subject to change pending device characterization.
2. Initial factory condition: < 100 program/erase cycles, 25 °C, typical supply voltage.
3. The maximum program and erase times occur after the specified number of program/erase cycles. These maximum values are characterized but not guaranteed.
4. Actual hardware programming times. This does not include software overhead.

Table 29. Flash module life

Symbol		C	Parameter	Conditions	Value			Unit
					Min	Typ	Max	
P/E	CC	C	Number of program/erase cycles per block over the operating temperature range (T_J)	16 KB blocks	100000	—	—	cycles
				32 KB blocks	10000	100000	—	cycles
				128 KB blocks	1000	100000	—	cycles
Retention	CC	C	Minimum data retention at 85 °C average ambient temperature(1)	Blocks with 0–1000 P/E cycles	20	—	—	years
				Blocks with 1001–10000 P/E cycles	10	—	—	
				Blocks with 10001–100000 P/E cycles	5	—	—	

1. Ambient temperature averaged over application duration. It is recommended not to exceed the product operating temperature range.

ECC circuitry provides correction of single bit faults and is used to improve further automotive reliability results. Some units will experience single bit corrections throughout the life of the product with no impact to product reliability.

Table 30. Flash memory read access timing

Symbol		C	Parameter	Conditions[1]	Max	Unit
f_{CFREAD}	CC	P	Maximum working frequency for reading code flash memory at given number of wait states in worst conditions	2 wait states	48	MHz
		C		0 wait states	20	
f_{DFREAD}	CC	P	Maximum working frequency for reading data flash memory at given number of wait states in worst conditions	6 wait states	48	MHz

1. V_{DD} = 3.3 V ± 10% / 5.0 V ± 10%, T_A = –40 to 125 °C, unless otherwise specified.

4.11.2 Flash power supply DC characteristics

Table 31 shows the power supply DC characteristics on external supply.

Note: Power supply for data flash is actually provided by code flash; this means that data flash cannot work if code flash is not powered.

Table 31. Flash power supply DC electrical characteristics

Symbol		C	Parameter	Conditions[1]		Value			Unit
						Min	Typ	Max	
I_{CFREAD}	CC	D	Sum of the current consumption on V_{DDHV} and V_{DDBV} on read access	Flash module read f_{CPU} = 48 MHz	Code flash	—	—	33	mA
I_{DFREAD}	CC	D			Data flash	—	—	4	mA
I_{CFMOD}	CC	D	Sum of the current consumption on V_{DDHV} and V_{DDBV} on matrix modification (program/erase)	Program/Erase on-going while reading flash registers, f_{CPU} = 48 MHz	Code flash	—	—	33	mA
I_{DFMOD}	CC	D			Data flash	—	—	6	mA
I_{FLPW}	CC	D	Sum of the current consumption on V_{DDHV} and V_{DDBV} during flash low-power mode	—	Code flash	—	—	910	µA
I_{CFPWD}	CC	D	Sum of the current consumption on V_{DDHV} and V_{DDBV} during flash power-down mode	—	Code flash	—	—	125	µA
I_{DFPWD}	CC	D			Data flash	—	—	25	µA

1. V_{DD} = 3.3 V ± 10% / 5.0 V ± 10%, T_A = –40 to 125 °C, unless otherwise specified.

4.11.3 Start-up/Switch-off timings

Table 32. Start-up time/Switch-off time

Symbol		C	Parameter	Conditions[1]	Value			Unit
					Min	Typ	Max	
$t_{FLARSTEXIT}$	CC	T	Delay for flash module to exit reset mode	Code flash	—	—	125	µs
				Data flash	—	—	150	µs
$t_{FLALPEXIT}$	CC	T	Delay for flash module to exit low-power mode[2]	Code flash	—	—	0.5	µs
$t_{FLAPDEXIT}$	CC	T	Delay for flash module to exit power-down mode	Code flash	—	—	30	µs
				Data flash	—	—	30[3]	µs
$t_{FLALPENTRY}$	CC	T	Delay for flash module to enter low-power mode	Code flash	—	—	0.5	µs
$t_{FLAPDENTRY}$	CC	T	Delay for flash module to enter power-down mode	Code flash	—	—	1.5	µs
				Data flash	—	—	4[3]	µs

1. V_{DD} = 3.3 V ± 10% / 5.0 V ± 10%, T_A = –40 to 125 °C, unless otherwise specified.
2. Data flash does not support low-power mode.
3. If code flash is already switched-on.

4.12 Electromagnetic compatibility (EMC) characteristics

Susceptibility tests are performed on a sample basis during product characterization.

4.12.1 Designing hardened software to avoid noise problems

EMC characterization and optimization are performed at component level with a typical application environment and simplified MCU software. It should be noted that good EMC performance is highly dependent on the user application and the software in particular.

Therefore it is recommended that the user apply EMC software optimization and prequalification tests in relation with the EMC level requested for his application.

- Software recommendations – The software flowchart must include the management of runaway conditions such as:
  - Corrupted program counter
  - Unexpected reset
  - Critical data corruption (control registers...)
- Prequalification trials – Most of the common failures (unexpected reset and program counter corruption) can be reproduced by manually forcing a low state on the reset pin or the oscillator pins for 1 second.

  To complete these trials, ESD stress can be applied directly on the device. When unexpected behavior is detected, the software can be hardened to prevent unrecoverable errors occurring (see the application note *Software Techniques For Improving Microcontroller EMC Performance* (AN1015)).

4.12.2 Electromagnetic interference (EMI)

The product is monitored in terms of emission based on a typical application. This emission test conforms to the IEC 61967-1 standard, which specifies the general conditions for EMI measurements.

Table 33. EMI radiated emission measurement

Symbol		C	Parameter	Conditions		Value			Unit
						Min	Typ	Max	
—	SR	—	Scan range	—		0.150	—	1000	MHz
f_{CPU}	SR	—	Operating frequency	—		—	48	—	MHz
V_{DD_LV}	SR	—	LV operating voltages	—		—	1.28	—	V
S_{EMI}	CC	T	Peak level	V_{DD} = 5 V, T_A = 25 °C, LQFP100 package Test conforming to IEC 61967-2, f_{OSC} = 8 MHz/f_{CPU} = 48 MHz	No PLL frequency modulation	—	—	18	dBµV
					± 2% PLL frequency modulation	—	—	14	dBµV

Note: EMI testing and I/O port waveforms per IEC 61967-1, -2, -4
For information on conducted emission and susceptibility measurement (norm IEC 61967-4), please contact your local marketing representative.

4.12.3 Absolute maximum ratings (electrical sensitivity)

Based on two different tests (ESD and LU) using specific measurement methods, the product is stressed in order to determine its performance in terms of electrical sensitivity.

Electrostatic discharge (ESD)

Electrostatic discharges (a positive then a negative pulse separated by 1 second) are applied to the pins of each sample according to the each pin combination. The sample size depends on the number of supply pins in the device (3 parts × (n + 1) supply pin). This test conforms to the AEC-Q100-002/-003/-011 standard. For more details, refer to the application note *Electrostatic Discharge Sensitivity Measurement* (AN1181).

Table 34. ESD absolute maximum ratings

Symbol		C	Ratings	Conditions	Class	Max value	Unit
$V_{ESD(HBM)}$	CC	T	Electrostatic discharge voltage (Human Body Model)	T_A = 25 °C conforming to AEC-Q100-002	H1C	2000	V
$V_{ESD(MM)}$	CC	T	Electrostatic discharge voltage (Machine Model)	T_A = 25 °C conforming to AEC-Q100-003	M2	200	V
$V_{ESD(CDM)}$	CC	T	Electrostatic discharge voltage (Charged Device Model)	T_A = 25 °C conforming to AEC-Q100-011	C3A	500	V
						750 (corners)	V

Note: All ESD testing is in conformity with CDF-AEC-Q100 Stress Test Qualification for Automotive Grade Integrated Circuits.
A device will be defined as a failure if after exposure to ESD pulses the device no longer meets the device specification requirements. Complete DC parametric and functional testing shall be performed per applicable device specification at room temperature followed by hot temperature, unless specified otherwise in the device specification.

Static latch-up (LU)

Two complementary static tests are required on six parts to assess the latch-up performance:

- A supply overvoltage is applied to each power supply pin.
- A current injection is applied to each input, output and configurable I/O pin.

These tests are compliant with the EIA/JESD 78 IC latch-up standard.

Table 35. Latch-up results

Symbol		C	Parameter	Conditions	Class
LU	CC	T	Static latch-up class	T_A = 125 °C conforming to JESD 78	II level A

4.13 Fast external crystal oscillator (4 to 16 MHz) electrical characteristics

The device provides an oscillator/resonator driver. *Figure 9* describes a simple model of the internal oscillator driver and provides an example of a connection for an oscillator or a resonator.

Table 36 provides the parameter description of 4 MHz to 16 MHz crystals used for the design simulations.

Figure 9. Crystal oscillator and resonator connection scheme

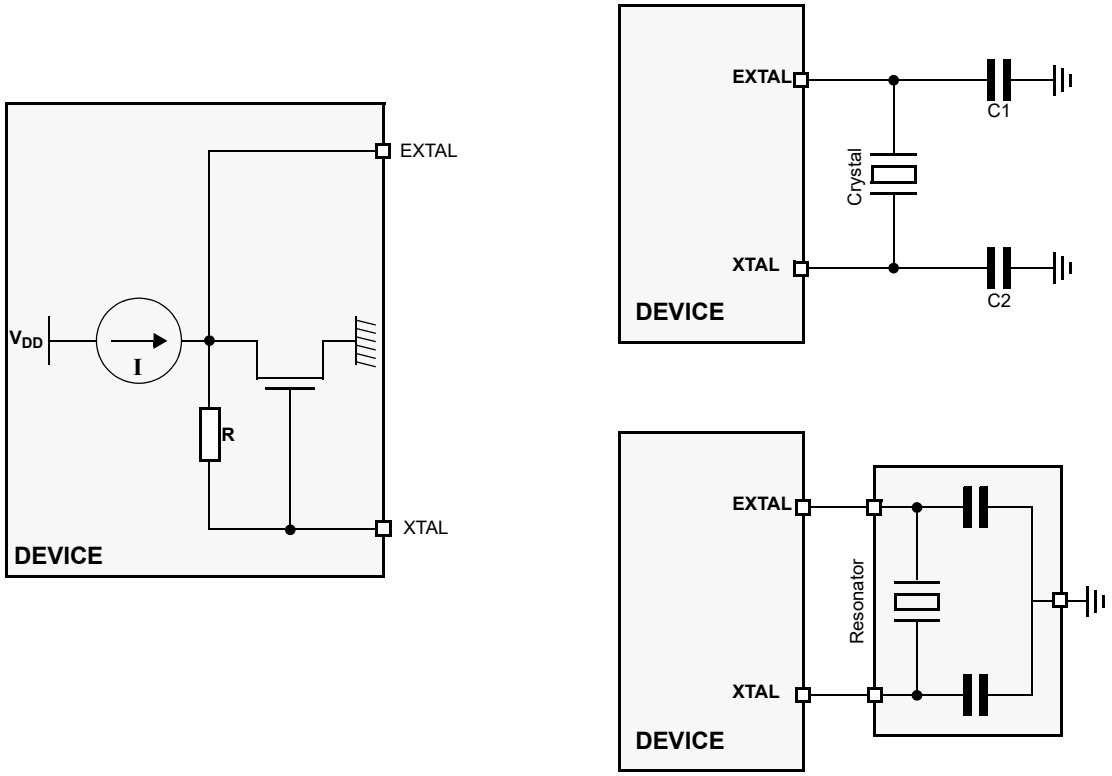

Notes:
1. XTAL/EXTAL must not be directly used to drive external circuits
2. A series resistor may be required, according to the crystal oscillator supplier recommendations.

Table 36. Crystal description

Nominal frequency (MHz)	NDK crystal reference	Crystal equivalent series resistance (ESR) Ω	Crystal motional capacitance (C_m) fF	Crystal motional inductance (L_m) mH	Load on xtalin/xtalout $C_1 = C_2$ (pF)(1)	Shunt capacitance between xtalout and xtalin C0(2) (pF)
4	NX8045GB	300	2.68	591.0	21	2.93
8	NX5032GA	300	2.46	160.7	17	3.01
10		150	2.93	86.6	15	2.91
12		120	3.11	56.5	15	2.93
16		120	3.90	25.3	10	3.00

1. The values specified for C1 and C2 are the same as used in simulations. It should be ensured that the testing includes all the parasitics (from the board, probe, crystal, etc.) as the AC / transient behavior depends upon them.
2. The value of C0 specified here includes 2 pF additional capacitance for parasitics (to be seen with bond-pads, package, etc.).

Figure 10. Fast external crystal oscillator (4 to 16 MHz) timing diagram

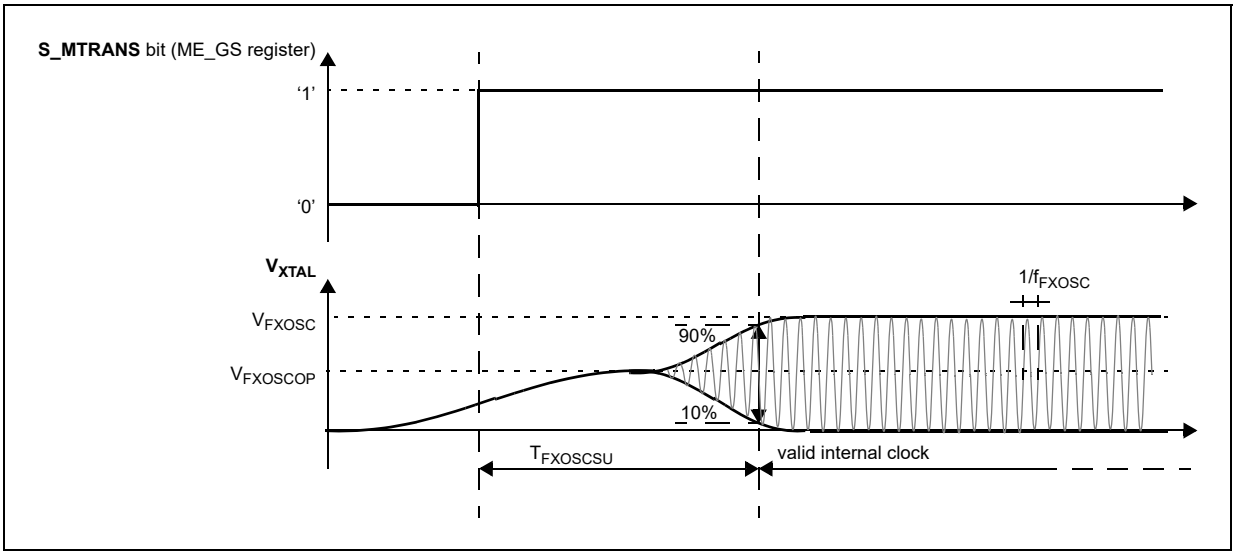

Table 37. Fast external crystal oscillator (4 to 16 MHz) electrical characteristics

Symbol		C	Parameter	Conditions[1]	Value			Unit
					Min	Typ	Max	
f_{FXOSC}	SR	—	Fast external crystal oscillator frequency	—	4.0	—	16.0	MHz
g_{mFXOSC}	CC	C	Fast external crystal oscillator transconductance	V_{DD} = 3.3 V ± 10%, PAD3V5V = 1 OSCILLATOR_MARGIN = 0	2.2	—	8.2	mA/V
	CC	P		V_{DD} = 5.0 V ± 10%, PAD3V5V = 0 OSCILLATOR_MARGIN = 0	2.0	—	7.4	
	CC	C		V_{DD} = 3.3 V ± 10%, PAD3V5V = 1 OSCILLATOR_MARGIN = 1	2.7	—	9.7	
	CC	C		V_{DD} = 5.0 V ± 10%, PAD3V5V = 0 OSCILLATOR_MARGIN = 1	2.5	—	9.2	
V_{FXOSC}	CC	T	Oscillation amplitude at EXTAL	f_{OSC} = 4 MHz, OSCILLATOR_MARGIN = 0	1.3	—	—	V
				f_{OSC} = 16 MHz, OSCILLATOR_MARGIN = 1	1.3	—	—	
$V_{FXOSCOP}$	CC	P	Oscillation operating point	—	—	0.95		V
I_{FXOSC}[2]	CC	T	Fast external crystal oscillator consumption	—	—	2	3	mA

Table 37. Fast external crystal oscillator (4 to 16 MHz) electrical characteristics (continued)

Symbol		C	Parameter	Conditions[1]	Value			Unit
					Min	Typ	Max	
$t_{FXOSCSU}$	CC	T	Fast external crystal oscillator start-up time	f_{OSC} = 4 MHz, OSCILLATOR_MARGIN = 0	—	—	6	ms
				f_{OSC} = 16 MHz, OSCILLATOR_MARGIN = 1	—	—	1.8	
V_{IH}	SR	P	Input high level CMOS (Schmitt Trigger)	Oscillator bypass mode	$0.65V_{DD}$	—	V_{DD}+0.4	V
V_{IL}	SR	P	Input low level CMOS (Schmitt Trigger)	Oscillator bypass mode	–0.4	—	$0.35V_{DD}$	V

1. V_{DD} = 3.3 V ± 10% / 5.0 V ± 10%, T_A = –40 to 125 °C, unless otherwise specified.
2. Stated values take into account only analog module consumption but not the digital contributor (clock tree and enabled peripherals).

4.14 FMPLL electrical characteristics

The device provides a frequency-modulated phase-locked loop (FMPLL) module to generate a fast system clock from the main oscillator driver.

Table 38. FMPLL electrical characteristics

Symbol		C	Parameter	Conditions[1]	Value			Unit
					Min	Typ	Max	
f_{PLLIN}	SR	—	FMPLL reference clock[2]	—	4	—	48	MHz
Δ_{PLLIN}	SR	—	FMPLL reference clock duty cycle[2]	—	40	—	60	%
f_{PLLOUT}	CC	D	FMPLL output clock frequency	—	16	—	48	MHz
f_{VCO}[3]	CC	P	VCO frequency without frequency modulation	—	256	—	512	MHz
			VCO frequency with frequency modulation	—	245	—	533	
f_{CPU}	SR	—	System clock frequency	—	—	—	48	MHz
f_{FREE}	CC	P	Free-running frequency		20	—	150	MHz
t_{LOCK}	CC	P	FMPLL lock time	Stable oscillator (f_{PLLIN} = 16 MHz)	—	40	100	µs
Δt_{LTJIT}	CC	—	FMPLL long term jitter	f_{PLLIN} = 16 MHz (resonator), f_{PLLCLK} at 48 MHz, 4000 cycles	—	—	10	ns
I_{PLL}	CC	C	FMPLL consumption	T_A = 25 °C	—	—	4	mA

1. V_{DD} = 3.3 V ± 10% / 5.0 V ± 10%, T_A = –40 to 125 °C, unless otherwise specified.
2. PLLIN clock retrieved directly from FXOSC clock. Input characteristics are granted when oscillator is used in functional mode. When bypass mode is used, oscillator input clock should verify f_{PLLIN} and Δ_{PLLIN}.
3. Frequency modulation is considered ±4%.

4.15 Fast internal RC oscillator (16 MHz) electrical characteristics

The device provides a 16 MHz fast internal RC oscillator (FIRC). This is used as the default clock at the power-up of the device.

Table 39. Fast internal RC oscillator (16 MHz) electrical characteristics

Symbol		C	Parameter	Conditions[1]		Value			Unit
						Min	Typ	Max	
f_{FIRC}	CC	P	Fast internal RC oscillator high frequency	T_A = 25 °C, trimmed		—	16	—	MHz
	SR	—		—		12		20	
$I_{FIRCRUN}$[2]	CC	T	Fast internal RC oscillator high frequency current in running mode	T_A = 25 °C, trimmed		—	—	200	µA
$I_{FIRCPWD}$	CC	D	Fast internal RC oscillator high frequency current in power down mode	T_A = 25 °C		—	—	10	µA
$I_{FIRCSTOP}$	CC	T	Fast internal RC oscillator high frequency and system clock current in stop mode	T_A = 25 °C	sysclk = off	—	500	—	µA
					sysclk = 2 MHz	—	600	—	
					sysclk = 4 MHz	—	700	—	
					sysclk = 8 MHz	—	900	—	
					sysclk = 16 MHz	—	1250	—	
t_{FIRCSU}	CC	C	Fast internal RC oscillator start-up time	V_{DD} = 5.0 V ± 10%		—	1.1	2.0	µs
$\Delta_{FIRCPRE}$	CC	C	Fast internal RC oscillator precision after software trimming of f_{FIRC}	T_A = 25 °C		–1	—	1	%
$\Delta_{FIRCTRIM}$	CC	C	Fast internal RC oscillator trimming step	T_A = 25 °C		—	1.6		%
$\Delta_{FIRCVAR}$	CC	C	Fast internal RC oscillator variation in temperature and supply with respect to f_{FIRC} at T_A = 55°C in high-frequency configuration	—		–5	—	5	%

1. V_{DD} = 3.3 V ± 10% / 5.0 V ± 10%, T_A = –40 to 125 °C, unless otherwise specified.
2. This does not include consumption linked to clock tree toggling and peripherals consumption when RC oscillator is ON.

4.16 Slow internal RC oscillator (128 kHz) electrical characteristics

The device provides a 128 kHz slow internal RC oscillator (SIRC). This can be used as the reference clock for the RTC module.

Table 40. Slow internal RC oscillator (128 kHz) electrical characteristics

Symbol		C	Parameter	Conditions[1]	Value			Unit
					Min	Typ	Max	
f_{SIRC}	CC	P	Slow internal RC oscillator low frequency	T_A = 25 °C, trimmed	—	128	—	kHz
	SR	—		—	100	—	150	
I_{SIRC}[2]	CC	C	Slow internal RC oscillator low frequency current	T_A = 25 °C, trimmed	—	—	5	µA
t_{SIRCSU}	CC	P	Slow internal RC oscillator start-up time	T_A = 25 °C, V_{DD} = 5.0 V±10%	—	8	12	µs
$\Delta_{SIRCPRE}$	CC	C	Slow internal RC oscillator precision after software trimming of f_{SIRC}	T_A = 25 °C	–2	—	2	%
$\Delta_{SIRCTRIM}$	CC	C	Slow internal RC oscillator trimming step	—	—	2.7	—	
$\Delta_{SIRCVAR}$	CC	P	Slow internal RC oscillator variation in temperature and supply with respect to f_{SIRC} at T_A = 55°C in high frequency configuration	High frequency configuration	–10	—	10	%

1. V_{DD} = 3.3 V ± 10% / 5.0 V ± 10%, T_A = –40 to 125 °C, unless otherwise specified.
2. This does not include consumption linked to clock tree toggling and peripherals consumption when RC oscillator is ON.

4.17 ADC electrical characteristics

4.17.1 Introduction

The device provides a 12-bit Successive Approximation Register (SAR) analog-to-digital converter.

Figure 11. ADC characteristics and error definitions

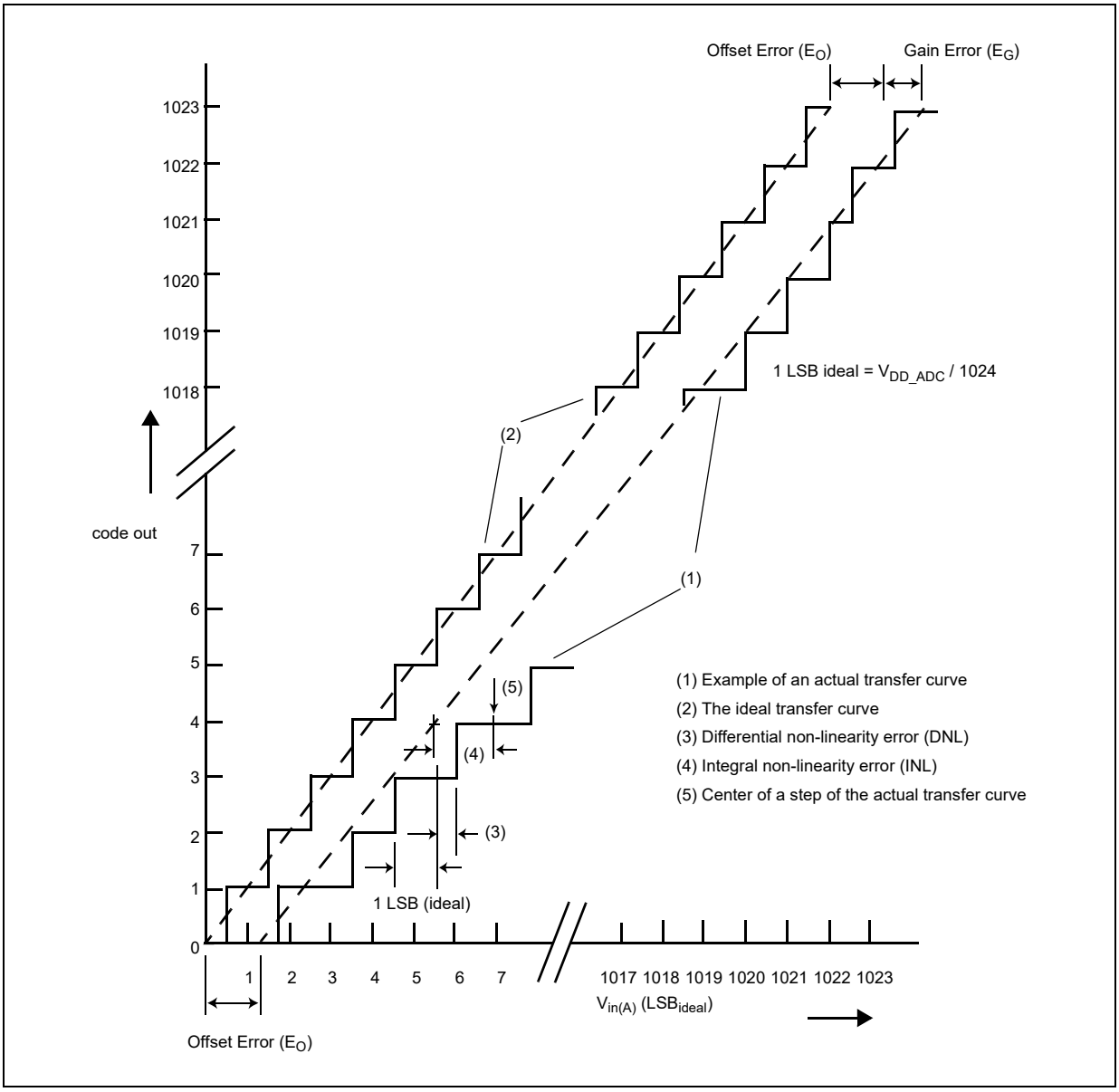

4.17.2 Input impedance and ADC accuracy

In the following analysis, the input circuit corresponding to the precise channels is considered.

To preserve the accuracy of the A/D converter, it is necessary that analog input pins have low AC impedance. Placing a capacitor with good high frequency characteristics at the input pin of the device can be effective: the capacitor should be as large as possible, ideally infinite. This capacitor contributes to attenuating the noise present on the input pin; furthermore, it sources charge during the sampling phase, when the analog signal source is a high-impedance source.

A real filter can typically be obtained by using a series resistance with a capacitor on the input pin (simple RC filter). The RC filtering may be limited according to the value of source

impedance of the transducer or circuit supplying the analog signal to be measured. The filter at the input pins must be designed taking into account the dynamic characteristics of the input signal (bandwidth) and the equivalent input impedance of the ADC itself.

In fact a current sink contributor is represented by the charge sharing effects with the sampling capacitance: being C_S and C_{p2} substantially two switched capacitances, with a frequency equal to the conversion rate of the ADC, it can be seen as a resistive path to ground. For instance, assuming a conversion rate of 1 MHz, with C_S+C_{p2} equal to 3 pF, a resistance of 330 kΩ is obtained ($R_{EQ} = 1 / (f_c \times (C_S+C_{p2}))$, where f_c represents the conversion rate at the considered channel). To minimize the error induced by the voltage partitioning between this resistance (sampled voltage on C_S+C_{p2}) and the sum of $R_S + R_F$, the external circuit must be designed to respect the *Equation 4*:

Equation 4

$$V_A \bullet \frac{R_S + R_F}{R_{EQ}} < \frac{1}{2} LSB$$

Equation 4 generates a constraint for external network design, in particular on a resistive path.

Figure 12. Input equivalent circuit (precise channels)

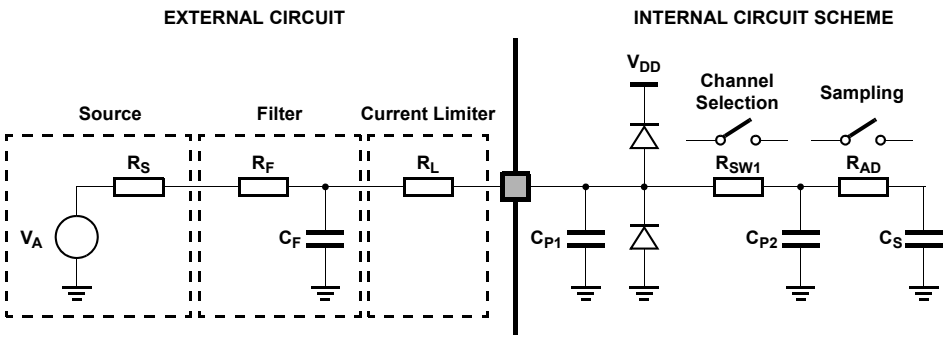

R_S: Source impedance

R_F: Filter resistance

C_F: Filter capacitance

R_L: Current limiter resistance

R_{SW1}: Channel selection switch impedance

R_{AD}: Sampling switch impedance

C_P: Pin capacitance (two contributions, C_{P1} and C_{P2})

C_S: Sampling capacitance

Figure 13. Input equivalent circuit (extended channels)

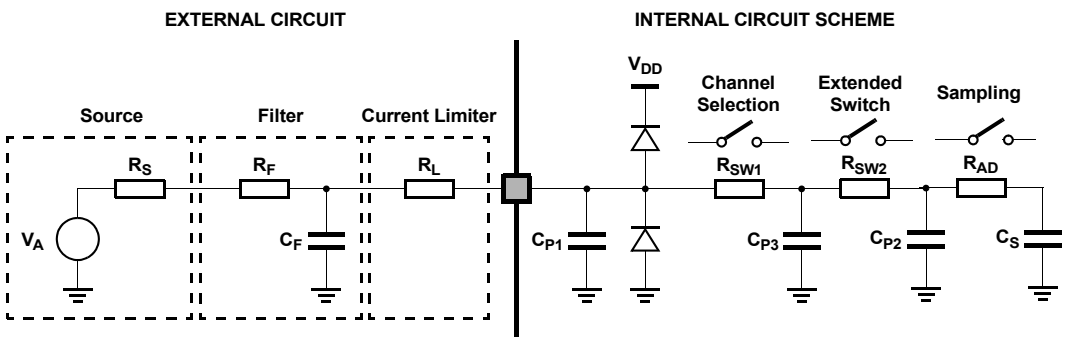

R_S: Source impedance

R_F: Filter resistance

C_F: Filter capacitance

R_L: Current limiter resistance

R_{SW1}: Channel selection switch impedance (two contributions, R_{SW1} and R_{SW2})

R_{AD}: Sampling switch impedance

C_P: Pin capacitance (two contributions, C_{P1}, C_{P2} and C_{P3})

C_S: Sampling capacitance

A second aspect involving the capacitance network shall be considered. Assuming the three capacitances C_F, C_{P1} and C_{P2} are initially charged at the source voltage V_A (refer to the equivalent circuit in *Figure 13*): A charge sharing phenomenon is installed when the sampling phase is started (A/D switch close).

Figure 14. Transient behavior during sampling phase

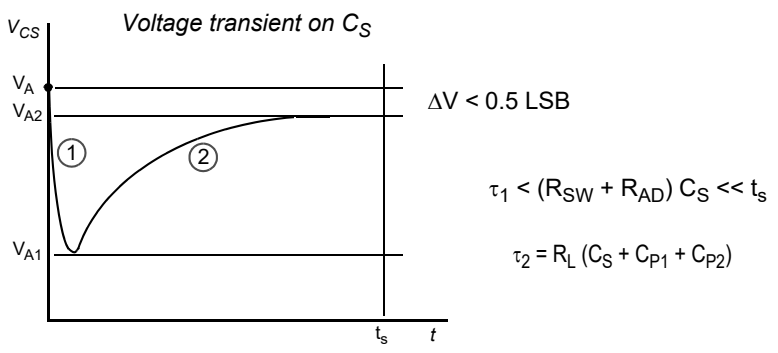

In particular two different transient periods can be distinguished:

1. A first and quick charge transfer from the internal capacitance C_{P1} and C_{P2} to the sampling capacitance C_S occurs (C_S is supposed initially completely discharged): considering a worst case (since the time constant in reality would be faster) in which C_{P2} is reported in parallel to C_{P1} (call $C_P = C_{P1} + C_{P2}$), the two capacitances C_P and C_S are in series, and the time constant is

Equation 5

$$\tau_1 = (R_{SW} + R_{AD}) \bullet \frac{C_P \bullet C_S}{C_P + C_S}$$

Equation 5 can again be simplified considering only C_S as an additional worst condition. In reality, the transient is faster, but the A/D converter circuitry has been designed to be robust also in the very worst case: the sampling time t_s is always much longer than the internal time constant:

Equation 6

$$\tau_1 < (R_{SW} + R_{AD}) \bullet C_S \ll t_s$$

The charge of C_{P1} and C_{P2} is redistributed also on C_S, determining a new value of the voltage V_{A1} on the capacitance according to the *Equation 7*:

Equation 7

$$V_{A1} \bullet (C_S + C_{P1} + C_{P2}) = V_A \bullet (C_{P1} + C_{P2})$$

2. A second charge transfer involves also C_F (that is typically bigger than the on-chip capacitance) through the resistance R_L: again considering the worst case in which C_{P2} and C_S were in parallel to C_{P1} (since the time constant in reality would be faster), the time constant is:

Equation 8

$$\tau_2 < R_L \bullet (C_S + C_{P1} + C_{P2})$$

In this case, the time constant depends on the external circuit: in particular imposing that the transient is completed well before the end of sampling time t_s, a constraints on R_L sizing is obtained:

Equation 9

$$10 \bullet \tau_2 = 10 \bullet R_L \bullet (C_S + C_{P1} + C_{P2}) < t_s$$

Of course, R_L shall be sized also according to the current limitation constraints, in combination with R_S (source impedance) and R_F (filter resistance). Being C_F definitively bigger than C_{P1}, C_{P2} and C_S, then the final voltage V_{A2} (at the end of the charge transfer transient) will be much higher than V_{A1}. *Equation 10* must be respected (charge balance assuming now C_S already charged at V_{A1}):

Equation 10

$$V_{A2} \bullet (C_S + C_{P1} + C_{P2} + C_F) = V_A \bullet C_F + V_{A1} \bullet (C_{P1} + C_{P2} + C_S)$$

The two transients above are not influenced by the voltage source that, due to the presence of the R_FC_F filter, is not able to provide the extra charge to compensate the voltage drop on C_S with respect to the ideal source V_A; the time constant R_FC_F of the filter is very high with respect to the sampling time (t_s). The filter is typically designed to act as anti-aliasing.

Figure 15. Spectral representation of input signal

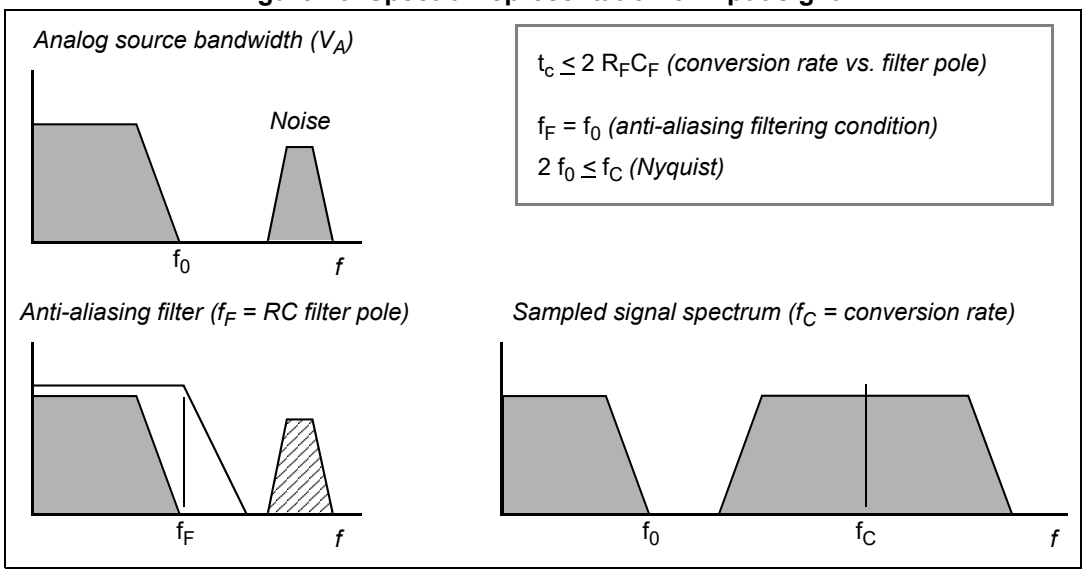

Calling f_0 the bandwidth of the source signal (and as a consequence the cut-off frequency of the anti-aliasing filter, f_F), according to the Nyquist theorem the conversion rate f_C must be at least $2f_0$; it means that the constant time of the filter is greater than or at least equal to twice the conversion period (t_c). Again the conversion period t_c is longer than the sampling time t_s, which is just a portion of it, even when fixed channel continuous conversion mode is selected (fastest conversion rate at a specific channel): in conclusion it is evident that the time constant of the filter R_FC_F is definitively much higher than the sampling time t_s, so the charge level on C_S cannot be modified by the analog signal source during the time in which the sampling switch is closed.

The considerations above lead to impose new constraints on the external circuit, to reduce the accuracy error due to the voltage drop on C_S; from the two charge balance equations above, it is simple to derive *Equation 11* between the ideal and real sampled voltage on C_S:

Equation 11

$$\frac{V_{A2}}{V_A} = \frac{C_{P1} + C_{P2} + C_F}{C_{P1} + C_{P2} + C_F + C_S}$$

From this formula, in the worst case (when V_A is maximum, that is for instance 5 V), assuming to accept a maximum error of half a count, a constraint is evident on C_F value:

Equation 12

$$C_F > 2048 \bullet C_S$$

4.17.3 ADC electrical characteristics

Table 41. ADC input leakage current

Symbol		C	Parameter	Conditions		Value			Unit
						Min	Typ	Max	
I_{LKG}	CC	C	Input leakage current	T_A = –40 °C	No current injection on adjacent pin	—	1	—	nA
		C		T_A = 25 °C		—	1	—	
		C		T_A = 105 °C		—	8	200	
		P		T_A = 125 °C		—	45	400	

Table 42. ADC conversion characteristics

Symbol		C	Parameter	Conditions[1]	Value			Unit
					Min	Typ	Max	
V_{SS_ADC}	SR	—	Voltage on VSS_HV_ADC (ADC reference) pin with respect to ground (V_{SS})[2]	—	–0.1	—	0.1	V
V_{DD_ADC}	SR	—	Voltage on VDD_HV_ADC pin (ADC reference) with respect to ground (V_{SS})	—	V_{DD} – 0.1	—	V_{DD} + 0.1	V
V_{AINx}	SR	—	Analog input voltage[3]	—	V_{SS_ADC} – 0.1	—	V_{DD_ADC} + 0.1	V
f_{ADC}	SR	—	ADC analog frequency	V_{DD} = 5.0 V	3.33	—	32 + 4%	MHz
				V_{DD} = 3.3 V	3.33	—	20 + 4%	
Δ_{ADC_SYS}	SR	—	ADC clock duty cycle (ipg_clk)	ADCLKSEL = 1[4]	45	—	55	%
t_{ADC_PU}	SR	—	ADC power up delay	—	—	—	1.5	µs
t_s	CC	T	Sampling time[5] V_{DD} = 3.3 V	f_{ADC} = 20 MHz, INPSAMP = 12	600	—	—	ns
				f_{ADC} = 3.33 MHz, INPSAMP = 255	—	—	76.2	µs
		T	Sampling time[5] V_{DD} = 5.0 V	f_{ADC} = 24 MHz, INPSAMP = 13	500	—	—	ns
				f_{ADC} = 3.33 MHz, INPSAMP = 255	—	—	76.2	µs

Table 42. ADC conversion characteristics (continued)

Symbol		C	Parameter	Conditions[1]		Value			Unit
						Min	Typ	Max	
t_c	CC	P	Conversion time[6] V_{DD} = 3.3 V	f_{ADC} = 20 MHz, INPCMP = 0		2.4	—	—	µs
				f_{ADC} = 13.33 MHz, INPCMP = 0		—	—	3.6	
		P	Conversion time[6] V_{DD} = 5.0 V	f_{ADC} = 32 MHz, INPCMP = 0		1.5	—	—	µs
				f_{ADC} = 13.33 MHz, INPCMP = 0		—	—	3.6	
C_S	CC	D	ADC input sampling capacitance	—		5			pF
C_{P1}	CC	D	ADC input pin capacitance 1	—		3			pF
C_{P2}	CC	D	ADC input pin capacitance 2	—		1			pF
C_{P3}	CC	D	ADC input pin capacitance 3	—		1.5			pF
R_{SW1}	CC	D	Internal resistance of analog source	—		—	—	1	kΩ
R_{SW2}	CC	D	Internal resistance of analog source	—		—	—	2	kΩ
R_{AD}	CC	D	Internal resistance of analog source	—		—	—	0.3	kΩ
I_{INJ}	SR	—	Input current injection	Current injection on one ADC input, different from the converte d one	V_{DD} = 3.3 V ± 10%	–5	—	5	mA
					V_{DD} = 5.0 V ± 10%	–5	—	5	
INLP	CC	T	Absolute integral non-linearity-precise channels	No overload		—	1	3	LSB
INLX	CC	T	Absolute integral non-linearity-extended channels	No overload		—	1.5	5	LSB
DNL	CC	T	Absolute differential non-linearity	No overload		—	0.5	1	LSB
E_O	CC	T	Absolute offset error	—		—	2	—	LSB
E_G	CC	T	Absolute gain error	—		—	2	—	LSB

1. V_{DD} = 3.3 V ± 10% / 5.0 V ± 10%, T_A = –40 to 125 °C, unless otherwise specified.

2. Analog and digital V_{SS} **must** be common (to be tied together externally).
3. V_{AINx} may exceed V_{SS_ADC} and V_{DD_ADC} limits, remaining on absolute maximum ratings, but the results of the conversion will be clamped respectively to 0x000 or 0xFFF.
4. Duty cycle is ensured by using system clock without prescaling. When ADCLKSEL = 0, the duty cycle is ensured by internal divider by 2.
5. During the sampling time the input capacitance C_S can be charged/discharged by the external source. The internal resistance of the analog source must allow the capacitance to reach its final voltage level within t_S. After the end of the sampling time t_S, changes of the analog input voltage have no effect on the conversion result. Values for the sample clock t_S depend on programming.
6. This parameter does not include the sampling time t_S, but only the time for determining the digital result and the time to load the result's register with the conversion result.

4.18 On-chip peripherals

4.18.1 Current consumption

Table 43. On-chip peripherals current consumption

Symbol		C	Parameter	Conditions		Typical value(1)	Unit
$I_{DD_BV(CAN)}$	CC	T	CAN (FlexCAN) supply current on V_{DD_BV}	500 Kbyte/s	Total (static + dynamic) consumption: – FlexCAN in loop-back mode – XTAL at 8 MHz used as CAN engine clock source – Message sending period is 580 µs	8 × f_{periph} + 85	µA
				125 Kbyte/s		8 × f_{periph} + 27	µA
$I_{DD_BV(eMIOS)}$	CC	T	eMIOS supply current on V_{DD_BV}	Static consumption: – eMIOS channel OFF – Global prescaler enabled		29 × f_{periph}	µA
				Dynamic consumption: – It does not change varying the frequency (0.003 mA)		3	µA
$I_{DD_BV(SCI)}$	CC	T	SCI (LINFlex) supply current on V_{DD_BV}	Total (static + dynamic) consumption: – LIN mode – Baudrate: 20 Kbyte/s		5 × f_{periph} + 31	µA
$I_{DD_BV(SPI)}$	CC	T	SPI (DSPI) supply current on V_{DD_BV}	Ballast static consumption (only clocked)		1	µA
				Ballast dynamic consumption (continuous communication): – Baudrate: 2 Mbit/s – Transmission every 8 µs – Frame: 16-bits		16 × f_{periph}	µA
$I_{DD_BV(ADC)}$	CC	T	ADC supply current on V_{DD_BV}	V_{DD} = 5.5 V	Ballast static consumption (no conversion)	41 × f_{periph}	µA
					Ballast dynamic consumption (continuous conversion)(2)	5 × f_{periph}	µA

Table 43. On-chip peripherals current consumption (continued)

Symbol		C	Parameter	Conditions		Typical value(1)	Unit
$I_{DD_HV_ADC(ADC)}$	CC	T	ADC supply current on $V_{DD_HV_ADC}$	V_{DD} = 5.5 V	Analog static consumption (no conversion)	2 × f_{periph}	µA
					Analog dynamic consumption (continuous conversion)	75 × f_{periph} + 32	µA
$I_{DD_HV(FLASH)}$	CC	T	CFlash + DFlash supply current on V_{DD_HV}	V_{DD} = 5.5 V	—	8.21	mA
$I_{DD_HV(PLL)}$	CC	T	PLL supply current on V_{DD_HV}	V_{DD} = 5.5 V	—	30 × f_{periph}	µA

1. f_{periph} is an absolute value.
2. During the conversion, the total current consumption is given from the sum of the static and dynamic consumption, i.e., (41 + 5) × f_{periph}.

Note: Operating conditions: TA = 25 °C, fperiph = 8 MHz to 48 MHz

4.18.2 DSPI characteristics

Table 44. DSPI characteristics

No.	Symbol		C	Parameter		DSPI0/DSPI1			Unit
						Min	Typ	Max	
1	t_{SCK}	SR	D	SCK cycle time	Master mode (MTFE = 0)	125	—	—	ns
			D		Slave mode (MTFE = 0)	125	—	—	
			D		Master mode (MTFE = 1)	83	—	—	
			D		Slave mode (MTFE = 1)	83	—	—	
—	f_{DSPI}	SR	D	DSPI digital controller frequency		—	—	f_{CPU}	MHz
—	Δt_{CSC}	CC	D	Internal delay between pad associated to SCK and pad associated to CSn in master mode	Master mode	—	—	130(1)	ns
—	Δt_{ASC}	CC	D	Internal delay between pad associated to SCK and pad associated to CSn in master mode for CSn1→1	Master mode	—	—	130(1)	ns
2	t_{CSCext}(2)	SR	D	CS to SCK delay	Slave mode	32	—	—	ns
3	t_{ASCext}(3)	SR	D	After SCK delay	Slave mode	$1/f_{DSPI}$ + 5	—	—	ns
4	t_{SDC}	CC	D	SCK duty cycle	Master mode	—	$t_{SCK}/2$	—	ns
		SR	D		Slave mode	$t_{SCK}/2$	—	—	

Table 44. DSPI characteristics (continued)

No.	Symbol		C	Parameter		DSPI0/DSPI1			Unit
						Min	Typ	Max	
5	t_A	SR	D	Slave access time	—	$1/f_{DSPI}$ + 70	—	—	ns
6	t_{DI}	SR	D	Slave SOUT disable time	—	7	—	—	ns
7	t_{PCSC}	SR	D	PCS*x* to $\overline{PCSS}$ time	—	0	—	—	ns
8	t_{PASC}	SR	D	$\overline{PCSS}$ to PCS*x* time	—	0	—	—	ns
9	t_{SUI}	SR	D	Data setup time for inputs	Master mode	43	—	—	ns
					Slave mode	5	—	—	
10	t_{HI}	SR	D	Data hold time for inputs	Master mode	0	—	—	ns
					Slave mode	2(4)	—	—	
11	t_{SUO}(5)	CC	D	Data valid after SCK edge	Master mode	—	—	32	ns
					Slave mode	—	—	52	
12	t_{HO}(5)	CC	D	Data hold time for outputs	Master mode	0	—	—	ns
					Slave mode	8	—	—	

1. Maximum is reached when CSn pad is configured as SLOW pad while SCK pad is configured as MEDIUM pad.
2. The t_{CSC} delay value is configurable through a register. When configuring t_{CSC} (using PCSSCK and CSSCK fields in DSPI_CTARx registers), delay between internal CS and internal SCK must be higher than Δt_{CSC} to ensure positive t_{CSCext}.
3. The t_{ASC} delay value is configurable through a register. When configuring t_{ASC} (using PASC and ASC fields in DSPI_CTARx registers), delay between internal CS and internal SCK must be higher than Δt_{ASC} to ensure positive t_{ASCext}.
4. This delay value corresponds to SMPL_PT = 00b which is bit field 9 and 8 of DSPI_MCR.
5. SCK and SOUT configured as MEDIUM pad.

Note: Operating conditions: COUT = 10 to 50 pF, SlewIN = 3.5 to 15 ns

Figure 16. DSPI classic SPI timing – master, CPHA = 0

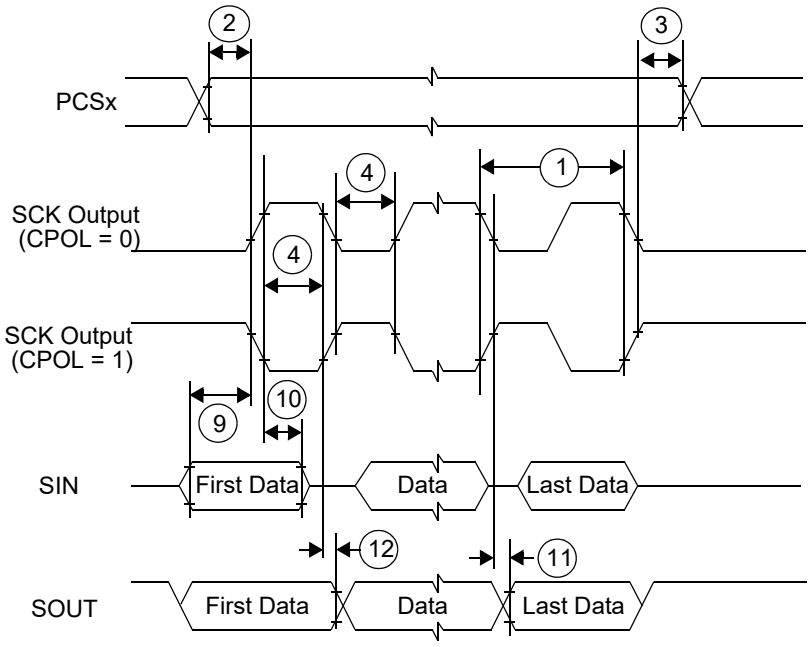

Note: Numbers shown reference *Table 44*.

Figure 17. DSPI classic SPI timing – master, CPHA = 1

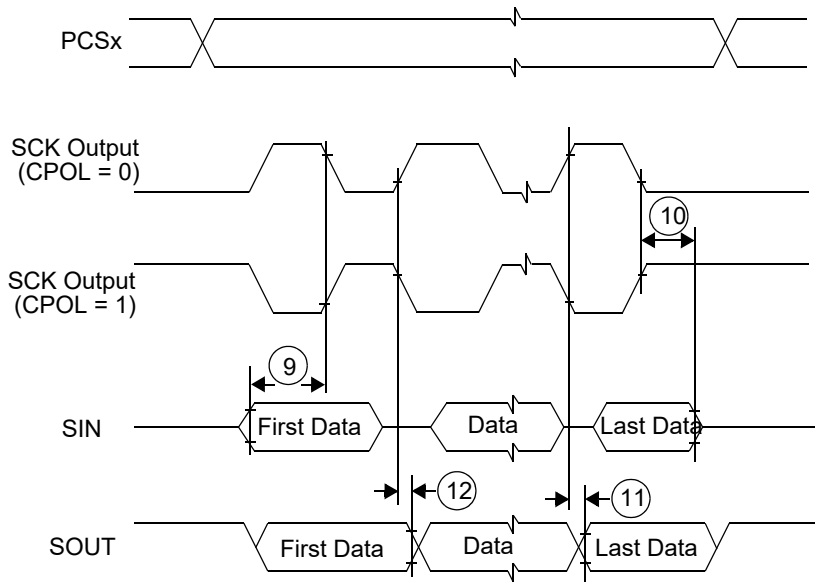

Note: Numbers shown reference *Table 44*.

Figure 18. DSPI classic SPI timing – slave, CPHA = 0

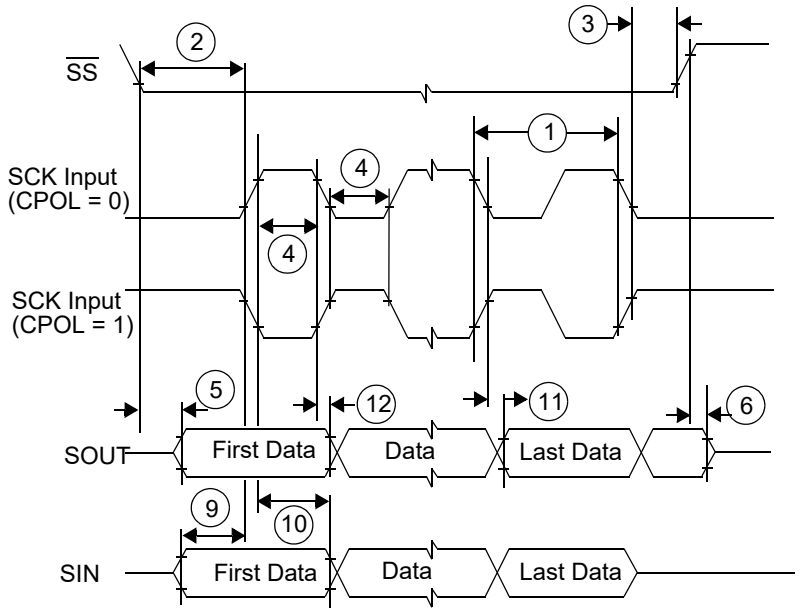

Note: Numbers shown reference *Table 44*.

Figure 19. DSPI classic SPI timing – slave, CPHA = 1

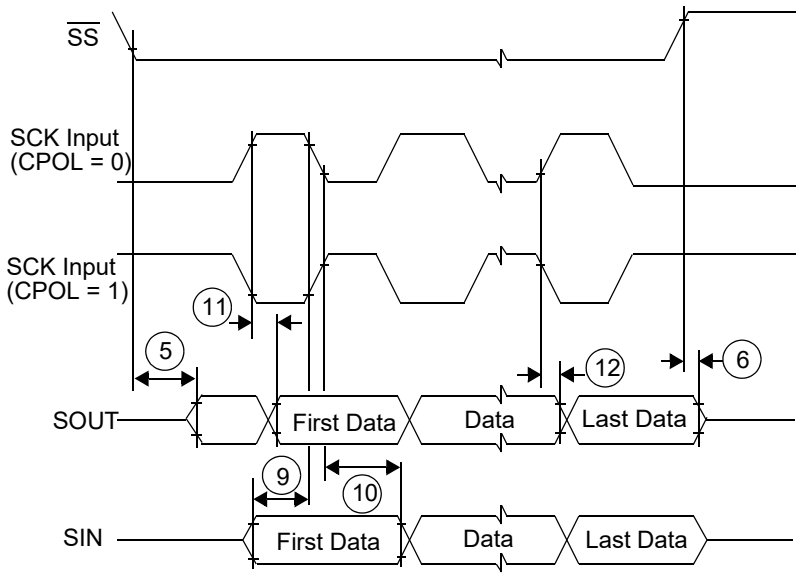

Note: Numbers shown reference *Table 44*.

Figure 20. DSPI modified transfer format timing – master, CPHA = 0

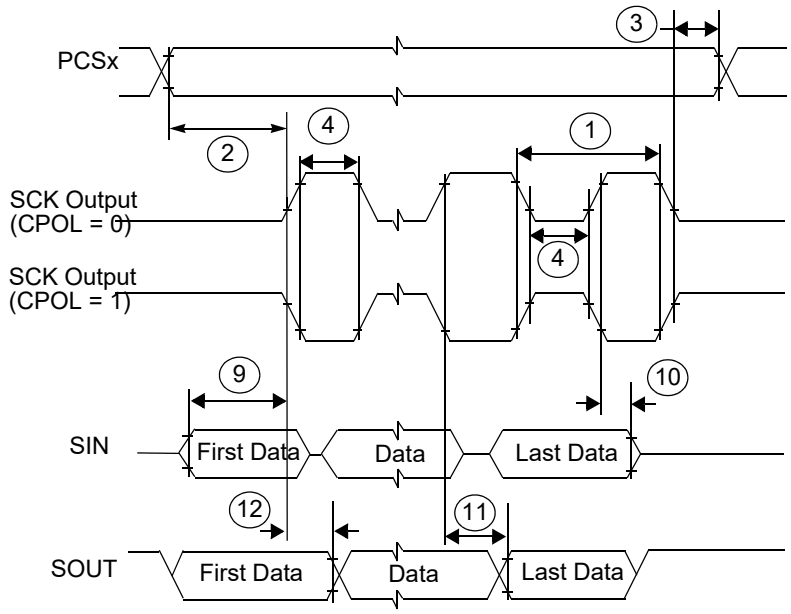

Note: Numbers shown reference *Table 44*.

Figure 21. DSPI modified transfer format timing – master, CPHA = 1

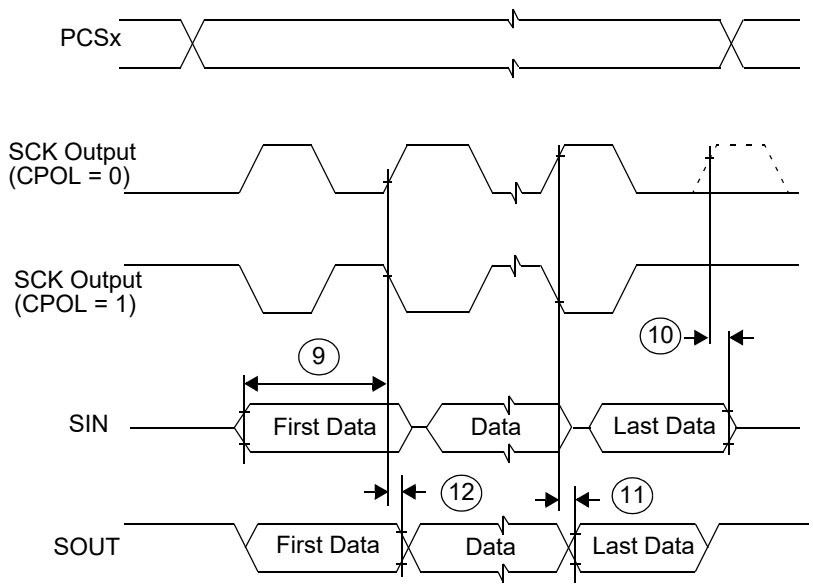

Note: Numbers shown reference *Table 44*.

Figure 22. DSPI modified transfer format timing – slave, CPHA = 0

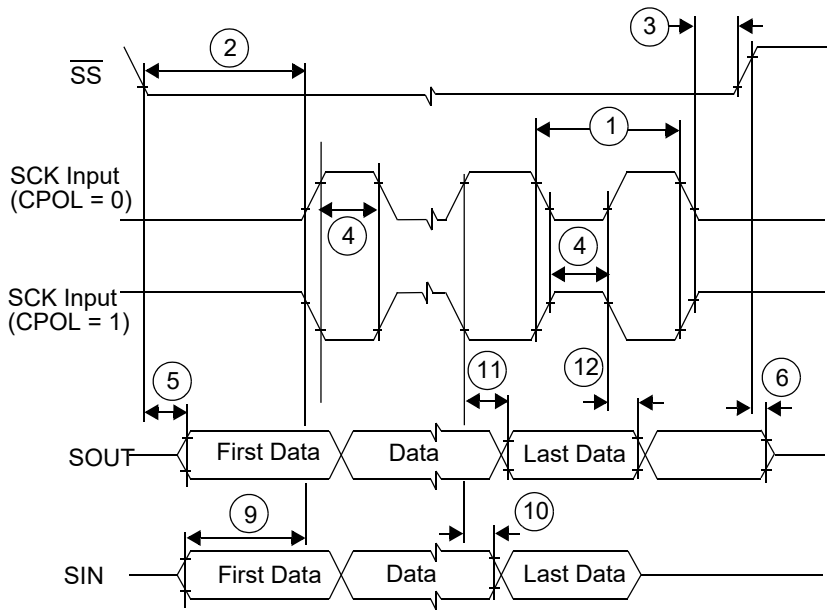

Note: Numbers shown reference *Table 44*.

Figure 23. DSPI modified transfer format timing – slave, CPHA = 1

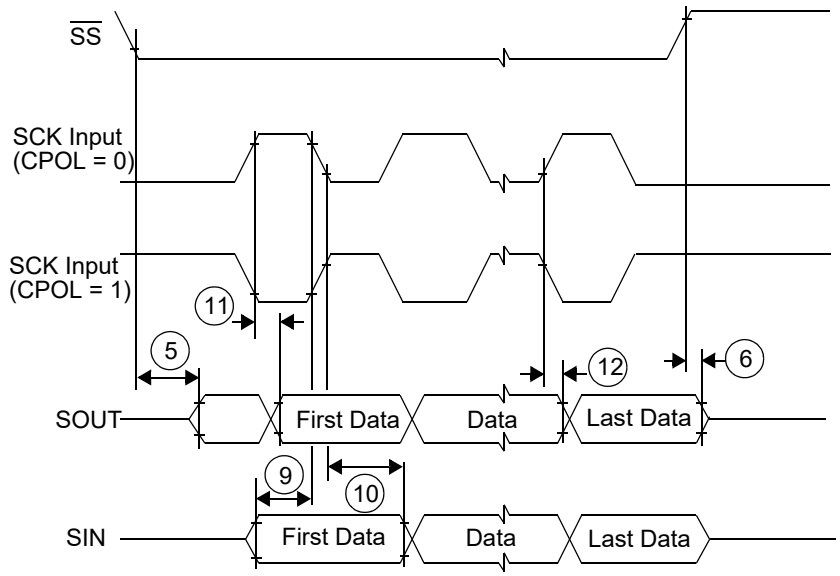

Note: Numbers shown reference *Table 44*.

Figure 24. DSPI PCS strobe (PCSS) timing

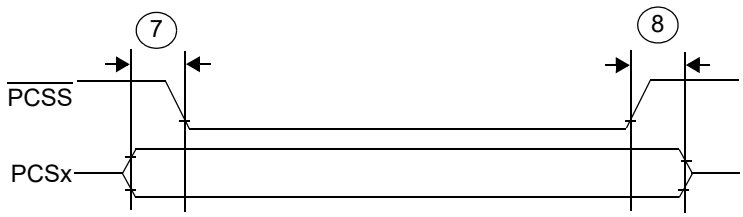

Note: Numbers shown reference *Table 44*.

4.18.3 JTAG characteristics

Table 45. JTAG characteristics

No.	Symbol		C	Parameter	Value			Unit
					Min	Typ	Max	
1	t_{JCYC}	CC	D	TCK cycle time	83.33	—	—	ns
2	t_{TDIS}	CC	D	TDI setup time	15	—	—	ns
3	t_{TDIH}	CC	D	TDI hold time	5	—	—	ns

Table 45. JTAG characteristics (continued)

No.	Symbol		C	Parameter	Value			Unit
					Min	Typ	Max	
4	t_{TMSS}	CC	D	TMS setup time	15	—	—	ns
5	t_{TMSH}	CC	D	TMS hold time	5	—	—	ns
6	t_{TDOV}	CC	D	TCK low to TDO valid	—	—	49	ns
7	t_{TDOI}	CC	D	TCK low to TDO invalid	6	—	—	ns

Figure 25. Timing diagram – JTAG boundary scan

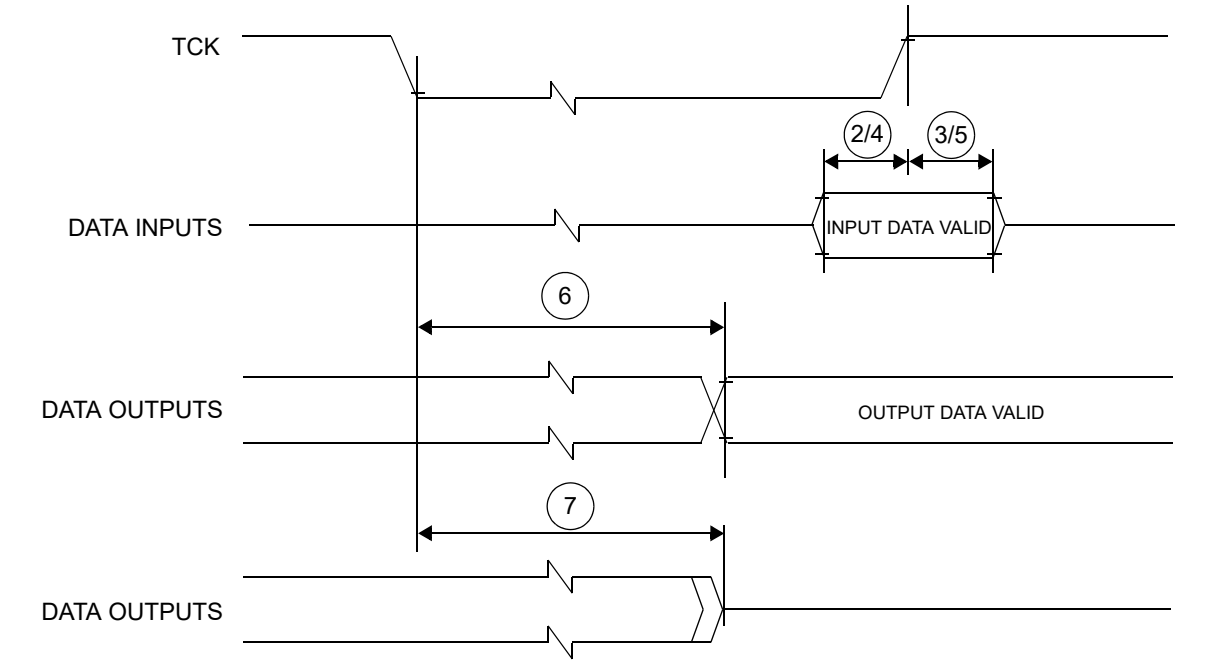

Note: Numbers shown reference *Table 45*.

5 Package characteristics

5.1 ECOPACK®

In order to meet environmental requirements, ST offers the devices in different grades of ECOPACK® packages, depending on their level of environmental compliance. ECOPACK® specifications, grade definitions and product status are available at: *www.st.com*. ECOPACK® is an ST trademark.

5.2 Package mechanical data

5.2.1 LQFP100

Figure 26. LQFP100 mechanical drawing

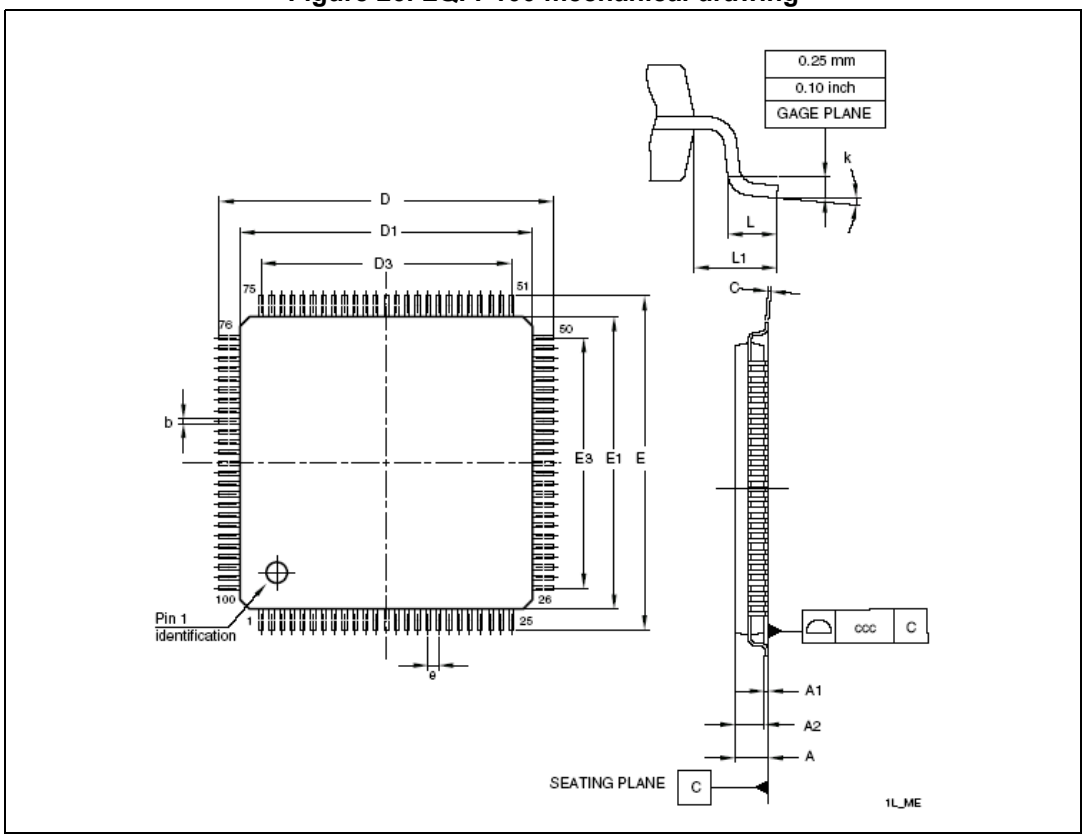

Table 46. LQFP100 mechanical data

Symbol	mm			inches[1]		
	Min	Typ	Max	Min	Typ	Max
A	—	—	1.600	—	—	0.0630
A1	0.050	—	0.150	0.0020	—	0.0059
A2	1.350	1.400	1.450	0.0531	0.0551	0.0571
b	0.170	0.220	0.270	0.0067	0.0087	0.0106
c	0.090	—	0.200	0.0035	—	0.0079
D	15.800	16.000	16.200	0.6220	0.6299	0.6378
D1	13.800	14.000	14.200	0.5433	0.5512	0.5591
D3	—	12.000	—	—	0.4724	—
E	15.800	16.000	16.200	0.6220	0.6299	0.6378
E1	13.800	14.000	14.200	0.5433	0.5512	0.5591
E3	—	12.000	—	—	0.4724	—
e	—	0.500	—	—	0.0197	—
L	0.450	0.600	0.750	0.0177	0.0236	0.0295
L1	—	1.000	—	—	0.0394	—
k	0.0°	3.5°	7.0°	0.0°	3.5°	7.0°
Tolerance	mm			inches		
ccc	0.080			0.0031		

1. Values in inches are converted from mm and rounded to four decimal digits.

5.2.2 LQFP64

Figure 27. LQFP64 mechanical drawing

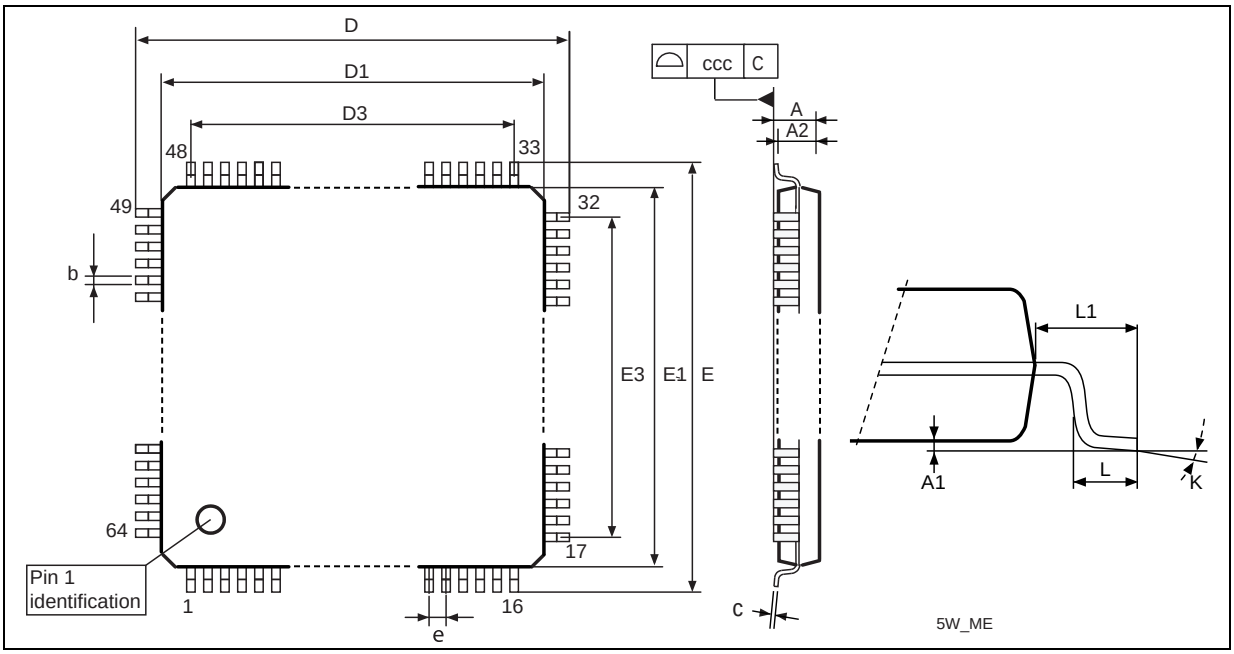

Table 47. LQFP64 mechanical data

Symbol	mm			inches(1)		
	Min	Typ	Max	Min	Typ	Max
A	—	—	1.6	—	—	0.0630
A1	0.05	—	0.15	0.0020	—	0.0059
A2	1.35	1.4	1.45	0.0531	0.0551	0.0571
b	0.17	0.22	0.27	0.0067	0.0087	0.0106
c	0.09	—	0.2	0.0035	—	0.0079
D	11.8	12	12.2	0.4646	0.4724	0.4803
D1	9.8	10	10.2	0.3858	0.3937	0.4016
D3	—	7.5	—	—	0.2953	—
E	11.8	12	12.2	0.4646	0.4724	0.4803
E1	9.8	10	10.2	0.3858	0.3937	0.4016
E3	—	7.5	—	—	0.2953	—
e	—	0.5	—	—	0.0197	—
L	0.45	0.6	0.75	0.0177	0.0236	0.0295
L1	—	1	—	—	0.0394	—
k	0.0°	3.5°	7.0°	0.0°	3.5°	7.0°
ccc	—	—	0.08	—	—	0.0031

1. Values in inches are converted from mm and rounded to four decimal digits.

6 Ordering information

Figure 28. Commercial product code structure

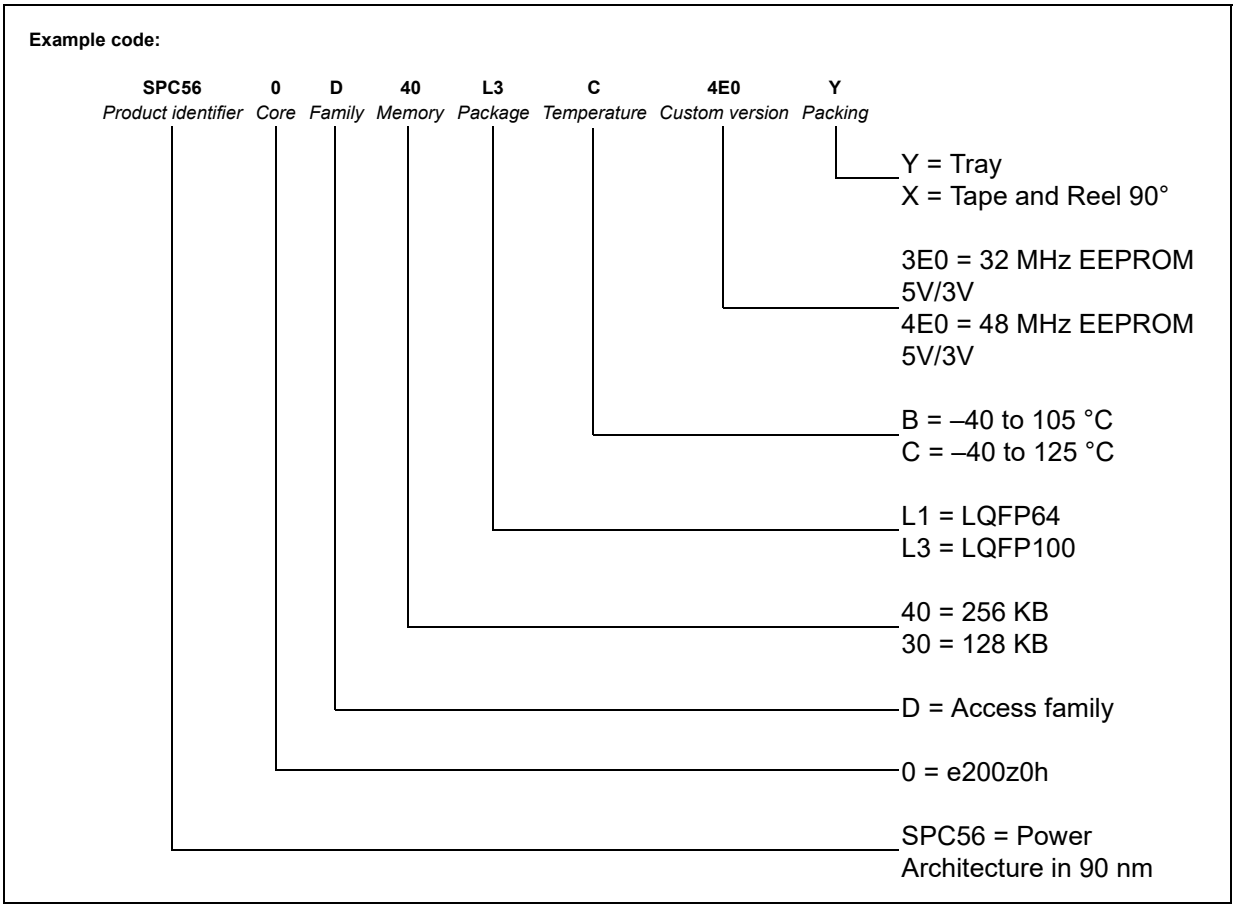

Appendix A Acronyms and abbreviations

Table 48 lists acronyms and abbreviations used in this document.

Table 48. Acronyms and abbreviations

Term	Meaning
APU	Auxilliary processing unit
CMOS	Complementary metal–oxide–semiconductor
CPHA	Clock phase
CPOL	Clock polarity
CS	Peripheral chip select
DAOC	Double action output compare
ECC	Error code correction
EVTO	Event out
GPIO	General purpose input/output
IPM	Input period measurement
IPWM	Input pulse width measurement
MB	Message buffer
MC	Modulus counter
MCB	Modulus counter buffered (up/down)
MCKO	Message clock out
MDO	Message data out
MSEO	Message start/end out
MTFE	Modified timing format enable
NVUSRO	Non-volatile user options register
OPWFMB	Output pulse width and frequency modulation buffered
OPWMB	Output pulse width modulation buffered
OPWMCB	Center aligned output pulse width modulation buffered with dead time
OPWMT	Output pulse width modulation trigger
PWM	Pulse width modulation
SAIC	Single action input capture
SAOC	Single action output compare
SCK	Serial communications clock
SOUT	Serial data out
TCK	Test clock input
TDI	Test data input

Table 48. Acronyms and abbreviations

Term	Meaning
TDO	Test data output
TMS	Test mode select

Revision history

Table 49 summarizes revisions to this document.

Table 49. Document revision history

Date	Revision	Changes
09-Jul-2009	1	Initial release.
18-Feb-2010	2	Updated the following tables: - Absolute maximum ratings - Low voltage power domain electrical characteristics; - On-chip peripherals current consumption - DSPI characteristics; - JTAG characteristics; - ADC conversion characteristics; Inserted a note on “Flash power supply DC characteristics” section.
10-Aug-2010	3	“Features” section: Updated information concerning eMIOS, ADC, LINFlex, Nexus and low power capabilities “SPC560D30x and SPC560D40x device comparison” table: updated the “Execution speed” row “SPC560D30x and SPC560D40x series block diagram” figure: – updated max number of Crossbar Switches – updated Legend “SPC560D30x and SPC560D40x series block summary” table: added contents concernig the eDMA block “LQFP100 pin configuration (top view)” figure: – removed alternate functions – updated supply pins “LQFP64 pin configuration (top view)” figure: removed alternate functions Added “Pin muxing” section “NVUSRO register” section: Deleted “NVUSRO[WATCHDOG_EN] field description“ section “Recommended operating conditions (3.3 V)” table: – TV_{DD}: deleted min value – In footnote No. 3, changed capacitance value between V_{DD_BV} and V_{SS_LV} “Recommended operating conditions (5.0 V)” table: deleted TV_{DD} min value “LQFP thermal characteristics” table: changed $R_{\theta JC}$ values “I/O input DC electrical characteristics” table: – W_{FI}: updated max value – W_{NFI}: updated min value “I/O consumption” table: removed I_{DYNSEG} row Added “I/O weight” table “Program and erase specifications (Code Flash)” table: deleted T_{Bank_C} row

Table 49. Document revision history (continued)

Date	Revision	Changes
10-Aug-2010	3 (cont.)	Updated the following tables: – “Voltage regulator electrical characteristics” – “Low voltage monitor electrical characteristics” – “Low voltage power domain electrical characteristics” – “Start-up time/Switch-off time” – “Fast external crystal oscillator (4 to 16 MHz) electrical characteristics” – “FMPLL electrical characteristics” – “Fast internal RC oscillator (16 MHz) electrical characteristics” – “ADC conversion characteristics” – “On-chip peripherals current consumption” – “DSPI characteristics” “DSPI characteristics” section: removed “DSPI PCS strobe (PCSS) timing” figure Updated “Order codes” table Added “Order codes for engineering samples” table Updated “Commercial product code structure” table
16-Sep-2011	4	Formatting and editorial changes throughout Device comparison table: for the “Total timer I/O eMIOS”, changed “13 ch” to “14 ch” SPC560D30/SPC560D40 series block summary: – added definition for “AUTOSAR” acronym – changed “System watchdog timer” to “Software watchdog timer” LQFP64 pin configuration (top view): changed pin 6 from VPP_TEST to VSS_HV Added section “Pad configuration during reset phases” Added section “Voltage supply pins” Added section “Pad types” Added section “System pins” Renamed and updated section “Functional ports” (was previously section “Pin muxing”); update includes replacing all instances of WKUP with WKPU (WKPU is the correct abbreviation for Wakeup Unit) Section “NVUSRO register”: edited content to separate configuration into electrical parameters and digital functionality Added section “NVUSRO[WATCHDOG_EN] field description” Absolute maximum ratings: Removed “C” column from table Replaced “TBD” with “—” in T_{VDD} min value cell of 3.3 V and 5 V recommended operating conditions tables LQFP thermal characteristics: removed $R_{\theta JB}$ single layer board conditions; updated footnote 4 I/O input DC electrical characteristics: removed footnote “All values need to be confirmed during device validation”; updated I_{LKG} characteristics

Table 49. Document revision history (continued)

Date	Revision	Changes
16-Sep-2011	4 (cont.)	MEDIUM configuration output buffer electrical characteristics: changed “I_{OH} = 100 µA” to “I_{OL} = 100 µA” in V_{OL} conditions I/O consumption: replaced instances of “Root medium square” with “Root mean square” Updated section “Voltage regulator electrical characteristics” Section “Low voltage detector electrical characteristics”: changed title (was “Voltage monitor electrical characteristics”); added a fifth LVD (LVDHV3B); added event status flag names found in RGM chapter of device reference manual to POR module and LVD descriptions; replaced instances of “Low voltage monitor” with “Low voltage detector”; deleted note referencing power domain No. 2 (this domain is not present on the device); updated electrical characteristics table Updated and renamed section “Power consumption” (was previously section “Low voltage domain power consumption”) Program and erase specifications (code flash): updated symbols; updated t_{esus} values Updated Flash memory read access timing EMI radiated emission measurement: updated S_{EMI} values Updated FMPLL electrical characteristics Crystal oscillator and resonator connection scheme: inserted footnote about possibly requiring a series resistor Fast internal RC oscillator (16 MHz) electrical characteristics: updated t_{FIRCSU} values Section “Input impedance and ADC accuracy”: changed “V_A/V_{A2}” to “V_{A2}/V_A” in Equation 13 ADC conversion characteristics: – updated conditions for sampling time V_{DD} = 5.0 V – updated conditions for conversion time V_{DD} = 5.0 V Updated Abbreviations Removed Order codes tables.
01-Dec-2011	5	Replaced “TBD” with “8.21 mA” in $I_{DD_HV(FLASH)}$ cell of On-chip peripherals current consumption table

Table 49. Document revision history (continued)

Date	Revision	Changes
04-Feb-2013	6	Removed all instances of table footnote “All values need to be confirmed during device validation” Section 4.1: Introduction, removed Caution note. Table 12: Recommended operating conditions (3.3 V), added minimum value of TVDD and footnote about it. Table 13: Recommended operating conditions (5.0 V), added minimum value of TVDD and footnote about it. Updated Section 4.17.2: Input impedance and ADC accuracy In Table 24, changed VLVDHV3L, VLVDHV3BL from 2.7 V to 2.6 V. Revised the Table 29: Flash module life Updated Table 44: DSPI characteristics, to add specifications 7 and 8, tPCSC and tPASC. Inserted Figure 24: DSPI PCS strobe (PCSS) timing
17-Sep-2013	7	Updated Disclaimer.
01-Nov-2018	8	Removed the following two tables: – Order codes – Order codes for engineering samples

IMPORTANT NOTICE – PLEASE READ CAREFULLY

STMicroelectronics NV and its subsidiaries (“ST”) reserve the right to make changes, corrections, enhancements, modifications, and improvements to ST products and/or to this document at any time without notice. Purchasers should obtain the latest relevant information on ST products before placing orders. ST products are sold pursuant to ST’s terms and conditions of sale in place at the time of order acknowledgement.

Purchasers are solely responsible for the choice, selection, and use of ST products and ST assumes no liability for application assistance or the design of Purchasers’ products.

No license, express or implied, to any intellectual property right is granted by ST herein.

Resale of ST products with provisions different from the information set forth herein shall void any warranty granted by ST for such product.

ST and the ST logo are trademarks of ST. All other product or service names are the property of their respective owners.

Information in this document supersedes and replaces information previously supplied in any prior versions of this document.

© 2018 STMicroelectronics – All rights reserved