# Glass Passivated Bridge Rectifiers

## FEATURES

- Glass passivated junction
- Integrally molded heatsink provide very low thermal resistance for maximum heat dissipation
- Typical $I_R$ less than 0.2μA
- High surge current capability
- UL Recognized File # E-326243
- Compliant to RoHS Directive 2011/65/EU and in accordance to WEEE 2002/96/EC

GBPC

GBPC-W

GBPC-M

Pb-Free

RoHS COMPLIANT

## MECHANICAL DATA

**Case:** GBPC
GBPC-W: Wire structure
GBPC-M: Terminal cathode parallel to anode
Molding compound, UL flammability classification rating 94V-0
**Terminal:** Matte tin plated leads, solderable per JESD22-B102
Meet JESD 201 class 1A whisker test
**Polarity:** Polarity as marked on the body
**Mounting torque:** 20 in-lbs maximum
**Weight:** 16.95 g (approximately)

## MAXIMUM RATINGS AND ELECTRICAL CHARACTERISTICS ($T_A$=25°C unless otherwise noted)

| PARAMETER | SYMBOL | 005 | 01 | 02 | 04 | 06 | 08 | 10 | UNIT |
|---|---|---|---|---|---|---|---|---|---|
| Maximum repetitive peak reverse voltage | $V_{RRM}$ | 50 | 100 | 200 | 400 | 600 | 800 | 1000 | V |
| Maximum RMS voltage | $V_{RMS}$ | 35 | 70 | 140 | 280 | 420 | 560 | 700 | V |
| Maximum DC blocking voltage | $V_{DC}$ | 50 | 100 | 200 | 400 | 600 | 800 | 1000 | V |
| Maximum average forward rectified current<br>GBPC15<br>GBPC25<br>GBPC35 | $I_{F(AV)}$ | 15<br>25<br>35 | | | | | | | A |
| Peak forward surge current,8.3 ms single half sine-wave superimposed on rated load (JEDEC method) GBPC15<br>GBPC25<br>GBPC35 | $I_{FSM}$ | 300<br>300<br>400 | | | | | | | A |
| Maximum instantaneous forward voltage drop per element at specified current (Note 1) GBPC15 7.5A<br>GBPC25 12.5A<br>GBPC35 17.5A | $V_F$ | 1.1 | | | | | | | V |
| Maximum reverse current @ Rated VR @ $T_J$=25°C | $I_R$ | 5 | | | | | | | μA |
| Typical thermal resistance | $R_{\theta JC}$ | 1.5 | | | | | | | °C/W |
| Operating junction temperature range | $T_J$ | - 55 to +150 | | | | | | | °C |
| Storage temperature range | $T_{STG}$ | - 55 to +150 | | | | | | | °C |

Note 1: Pulse test with PW=300μs, 1% duty cycle

| ORDERING INFORMATION | | | |
|---|---|---|---|
| PART NO. | PACKING CODE | PACKAGE | PACKING |
| GBPC*5xx (Note 1) | T0 | GBPC | Tray |

Note 1: "*" defines current from 15A (GBPC15xx) to 35A (GBPC35xx),
"xx" defines voltage from 50V (GBPC*5005) to 1000V (GBPC*510)

| EXAMPLE | | | |
|---|---|---|---|
| PREFERRED P/N | PART NO. | PACKING CODE | DESCRIPTION |
| GBPC1510 T0 | GBPC1510 | T0 | |

## RATINGS AND CHARACTERISTICS CURVES

($T_A$=25°C unless otherwise noted)

FIG.1 FORWARD CURRENT DERATING CURVE

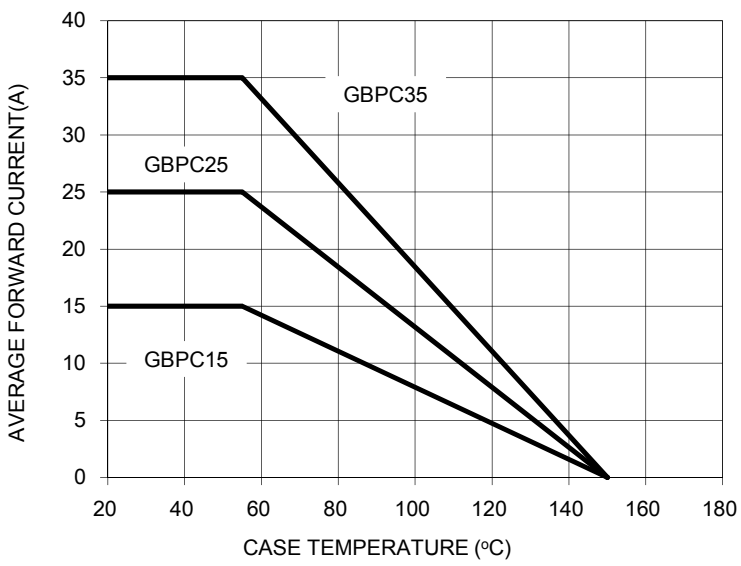


FIG. 2 TYPICAL REVERSE CHARACTERISTICS

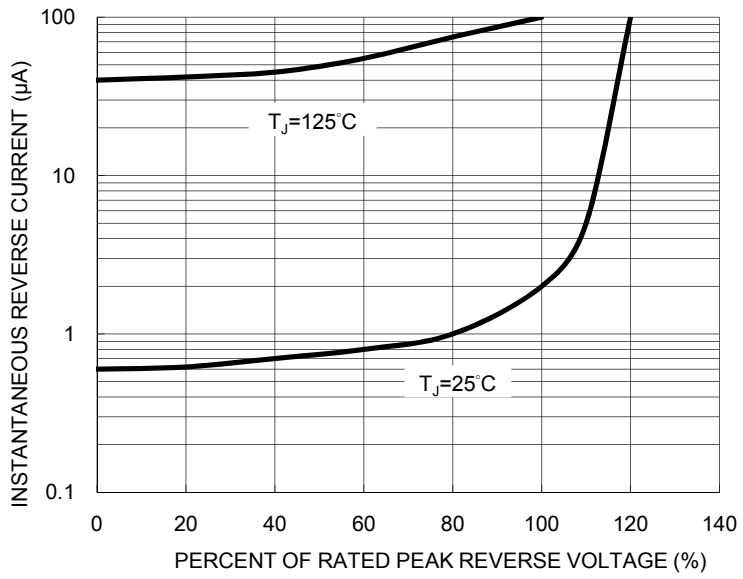


FIG. 3 MAXIMUM NON-REPETITIVE FORWARD SURGE CURRENT

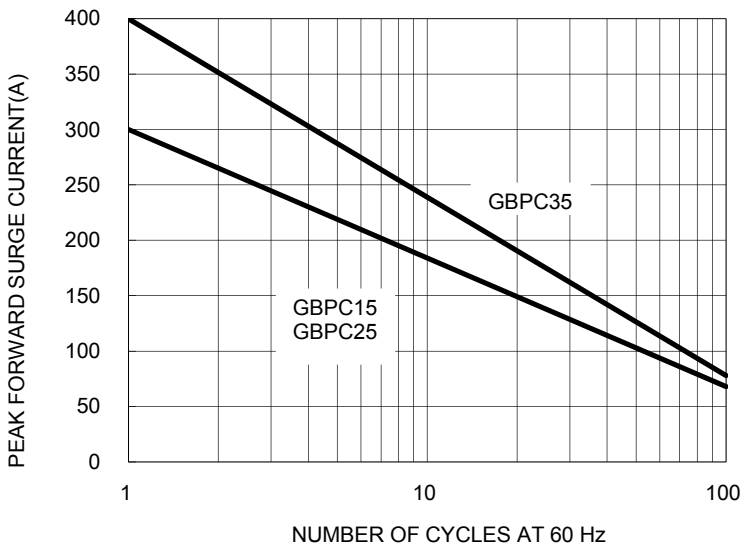


FIG. 4 TYPICAL FORWARD CHARACTERISTICS

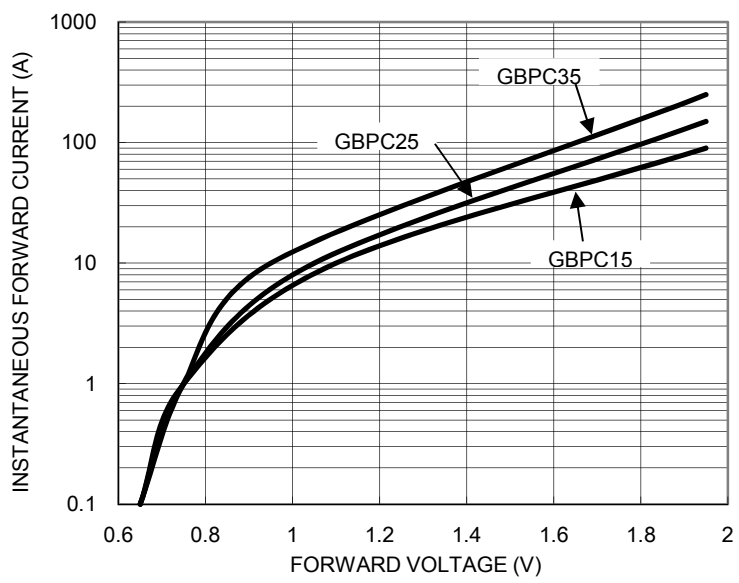

FIG. 5 TYPICAL JUNCTION CAPACITANCE

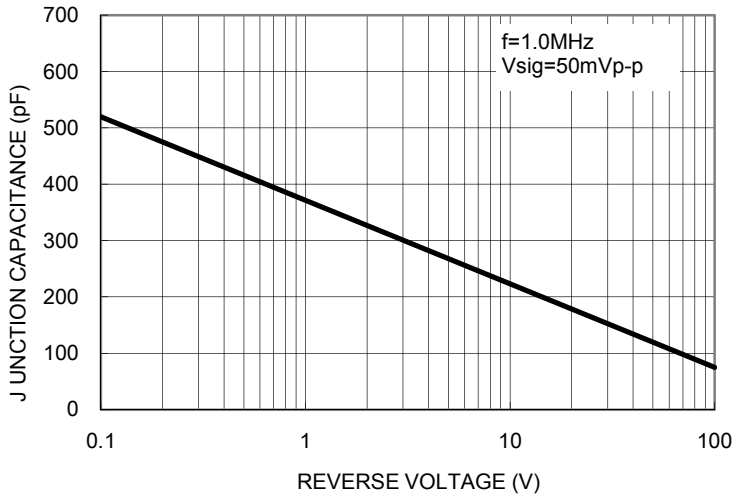


## PACKAGE OUTLINE DIMENSIONS

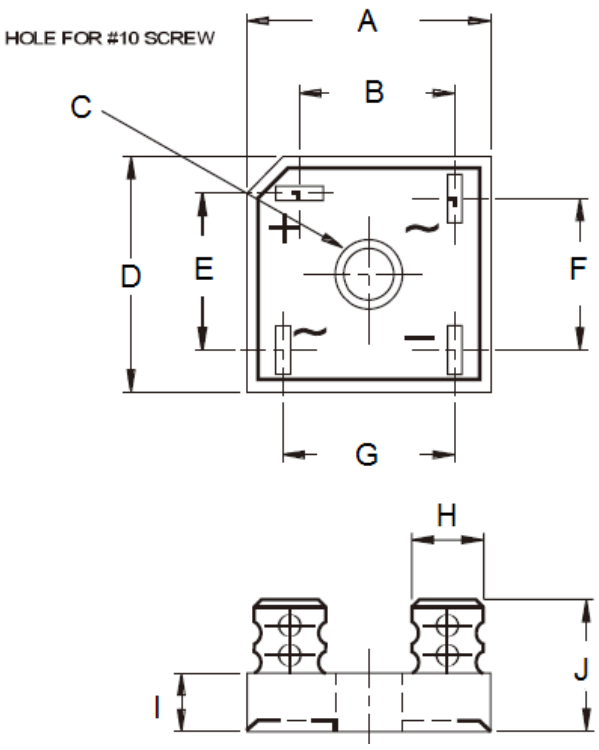


| GBPC | | | | |
|---|---|---|---|---|
| DIM. | Unit (mm) | | Unit (inch) | |
| | Min | Max | Min | Max |
| A | 28.50 | 29.00 | 1.122 | 1.142 |
| B | 15.50 | 17.60 | 0.610 | 0.693 |
| C | 5.08 | 5.59 | 0.200 | 0.220 |
| D | 28.50 | 29.00 | 1.122 | 1.142 |
| E | 15.50 | 17.60 | 0.610 | 0.693 |
| F | 13.30 | 15.30 | 0.524 | 0.602 |
| G | 17.10 | 19.10 | 0.673 | 0.752 |
| H | 6.35 (TYP) | | 0.25 (TYP) | |
| I | 10.97 | 11.23 | 0.432 | 0.442 |
| J | 21.50 | 24.50 | 0.846 | 0.965 |

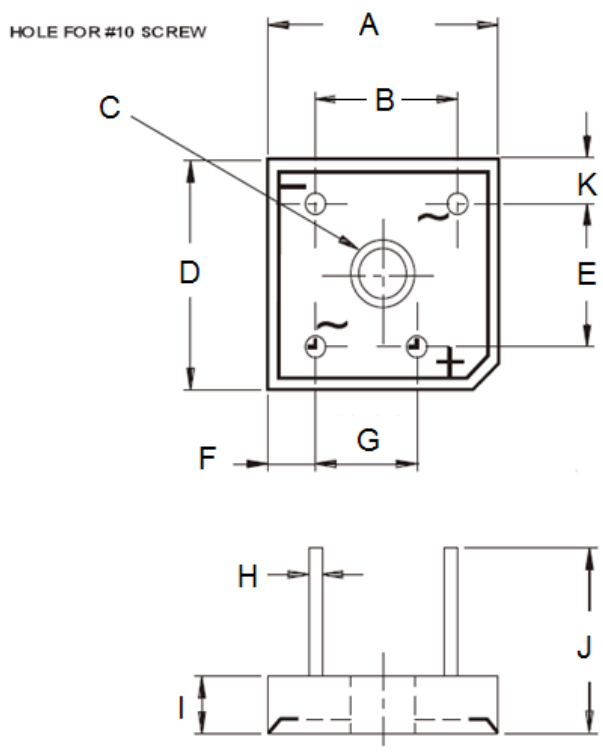


| GBPC-W | | | | |
|---|---|---|---|---|
| DIM. | Unit (mm) | | Unit (inch) | |
| | Min | Max | Min | Max |
| A | 28.50 | 29.00 | 1.122 | 1.142 |
| B | 17.10 | 19.10 | 0.673 | 0.752 |
| C | 5.08 | 5.59 | 0.200 | 0.220 |
| D | 28.50 | 29.00 | 1.122 | 1.142 |
| E | 17.10 | 19.10 | 0.673 | 0.752 |
| F | 4.40 | 6.20 | 0.173 | 0.244 |
| G | 10.40 | 12.40 | 0.409 | 0.488 |
| H | 0.97 | 1.07 | 0.038 | 0.042 |
| I | 10.97 | 11.23 | 0.432 | 0.442 |
| J | 30.50 | - | 1.201 | - |
| K | 4.40 | 6.20 | 0.173 | 0.244 |

## PACKAGE OUTLINE DIMENSIONS

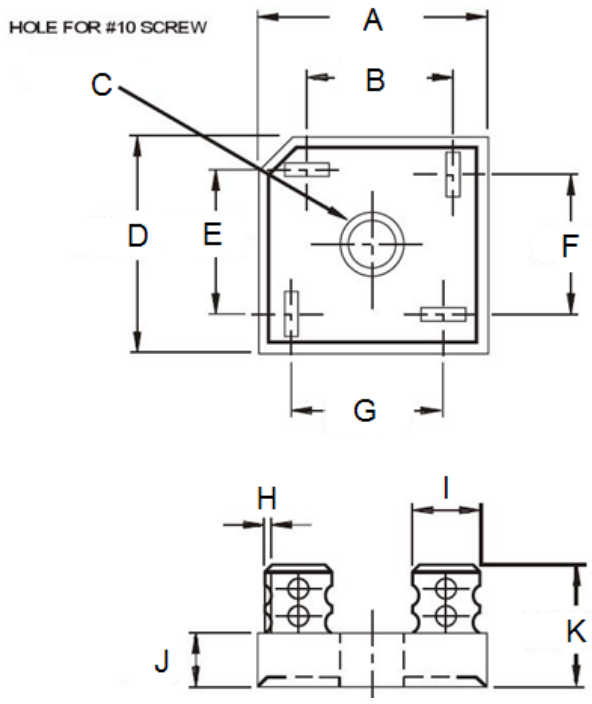


| GBPC-M | | | | |
|---|---|---|---|---|
| DIM. | Unit (mm) | | Unit (inch) | |
| | Min | Max | Min | Max |
| A | 28.50 | 29.00 | 1.122 | 1.142 |
| B | 15.50 | 17.60 | 0.610 | 0.693 |
| C | 5.08 | 5.59 | 0.200 | 0.220 |
| D | 28.50 | 29.00 | 1.122 | 1.142 |
| E | 15.50 | 17.60 | 0.610 | 0.693 |
| F | 15.50 | 17.60 | 0.610 | 0.693 |
| G | 15.50 | 17.60 | 0.610 | 0.693 |
| H | 0.76 | 0.86 | 0.030 | 0.034 |
| I | 6.6 (TYP) | | 0.26 (TYP) | |
| J | 10.97 | 11.23 | 0.432 | 0.442 |
| K | 21.26 | 24.57 | 0.837 | 0.967 |

## MARKING DIAGRAM

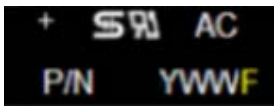


P/N = Specific Device Code
YWW = Date Code
F = Factory Code

## Notice

Specifications of the products displayed herein are subject to change without notice. TSC or anyone on its behalf, assumes no responsibility or liability for any errors or inaccuracies.

Information contained herein is intended to provide a product description only. No license, express or implied,to any intellectual property rights is granted by this document. Except as provided in TSC's terms and conditions of sale for such products, TSC assumes no liability whatsoever, and disclaims any express or implied warranty, relating to sale and/or use of TSC products including liability or warranties relating to fitness for a particular purpose, merchantability, or infringement of any patent, copyright, or other intellectual property right.

The products shown herein are not designed for use in medical, life-saving, or life-sustaining applications. Customers using or seling these products for use in such applications do so at their own risk and agree to fully indemnify TSC for any damages resulting from such improper use or sale.