Glass Passivated Bridge Rectifiers

FEATURES

- Glass passivated junction
- Integrally molded heatsink provide very low thermal resistance for maximum heat dissipation
- Typical I_R less than 0.2μA
- High surge current capability
- UL Recognized File # E-326243
- Compliant to RoHS Directive 2011/65/EU and in accordance to WEEE 2002/96/EC

GBPC

GBPC-W

GBPC-M

Pb-Free

RoHS COMPLIANT

MECHANICAL DATA

Case: GBPC
GBPC-W: Wire structure
GBPC-M: Terminal cathode parallel to anode
Molding compound, UL flammability classification rating 94V-0
Terminal: Matte tin plated leads, solderable per JESD22-B102
Meet JESD 201 class 1A whisker test
Polarity: Polarity as marked on the body
Mounting torque: 20 in-lbs maximum
Weight: 16.95 g (approximately)

MAXIMUM RATINGS AND ELECTRICAL CHARACTERISTICS (T_A=25°C unless otherwise noted)

PARAMETER	SYMBOL	005	01	02	04	06	08	10	UNIT
Maximum repetitive peak reverse voltage	V_{RRM}	50	100	200	400	600	800	1000	V
Maximum RMS voltage	V_{RMS}	35	70	140	280	420	560	700	V
Maximum DC blocking voltage	V_{DC}	50	100	200	400	600	800	1000	V
Maximum average forward rectified current GBPC15 GBPC25 GBPC35	$I_{F(AV)}$	15 25 35							A
Peak forward surge current,8.3 ms single half sine-wave superimposed on rated load (JEDEC method) GBPC15 GBPC25 GBPC35	I_{FSM}	300 300 400							A
Maximum instantaneous forward voltage drop per element at specified current (Note 1) GBPC15 7.5A GBPC25 12.5A GBPC35 17.5A	V_F	1.1							V
Maximum reverse current @ Rated VR @ T_J=25°C	I_R	5							μA
Typical thermal resistance	$R_{\theta JC}$	1.5							°C/W
Operating junction temperature range	T_J	- 55 to +150							°C
Storage temperature range	T_{STG}	- 55 to +150							°C

Note 1: Pulse test with PW=300μs, 1% duty cycle

ORDERING INFORMATION			
PART NO.	PACKING CODE	PACKAGE	PACKING
GBPC*5xx (Note 1)	T0	GBPC	Tray

Note 1: "*" defines current from 15A (GBPC15xx) to 35A (GBPC35xx),
"xx" defines voltage from 50V (GBPC*5005) to 1000V (GBPC*510)

EXAMPLE			
PREFERRED P/N	PART NO.	PACKING CODE	DESCRIPTION
GBPC1510 T0	GBPC1510	T0	

RATINGS AND CHARACTERISTICS CURVES

(T_A=25°C unless otherwise noted)

FIG.1 FORWARD CURRENT DERATING CURVE

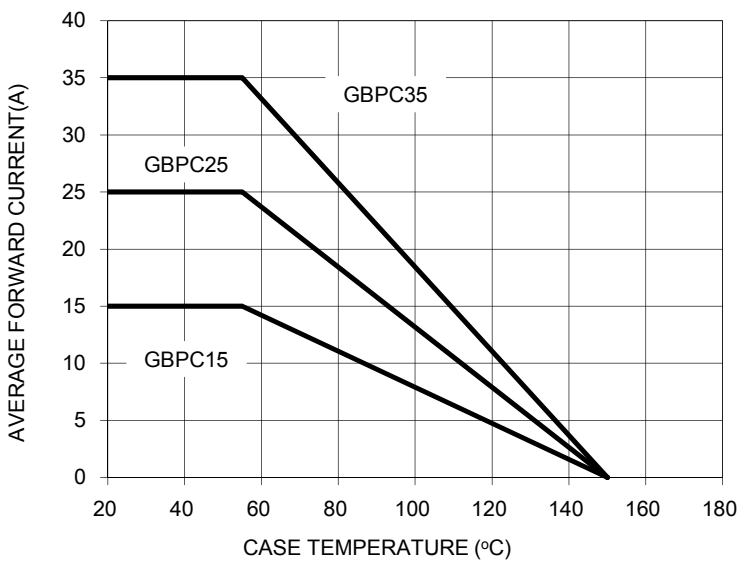

FIG. 2 TYPICAL REVERSE CHARACTERISTICS

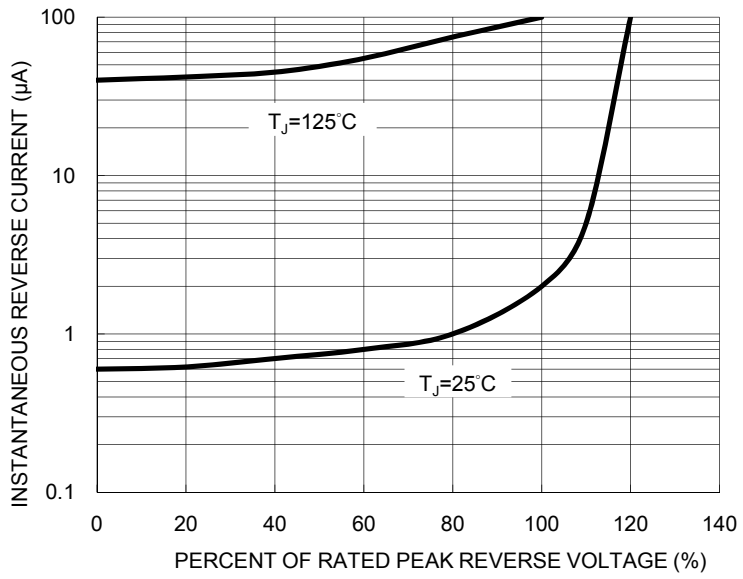

FIG. 3 MAXIMUM NON-REPETITIVE FORWARD SURGE CURRENT

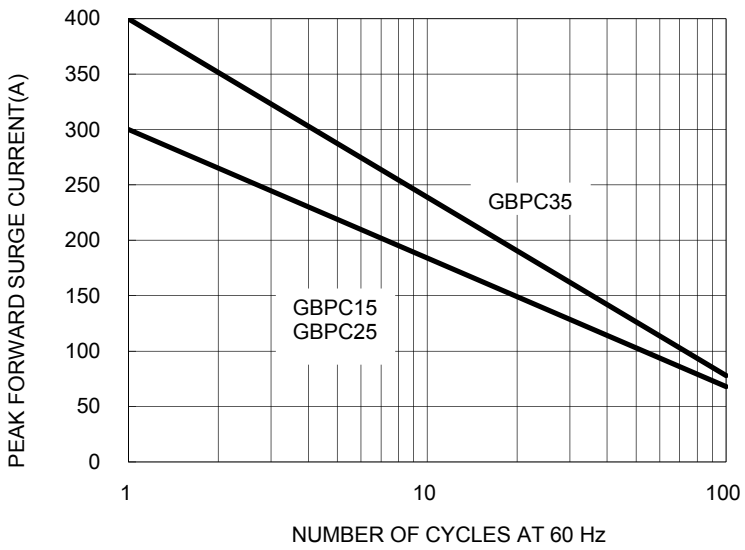

FIG. 4 TYPICAL FORWARD CHARACTERISTICS

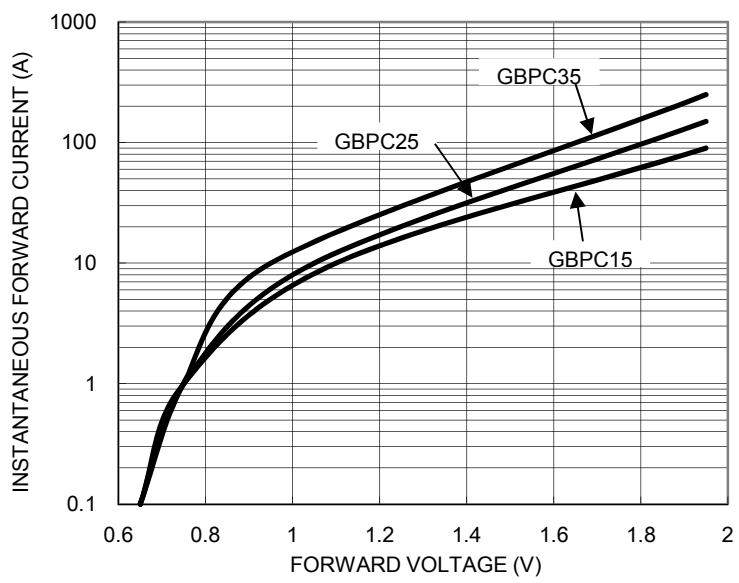

FIG. 5 TYPICAL JUNCTION CAPACITANCE

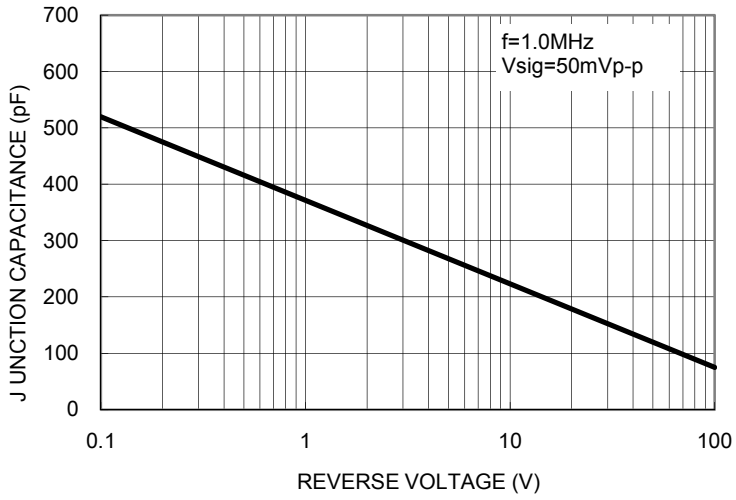

PACKAGE OUTLINE DIMENSIONS

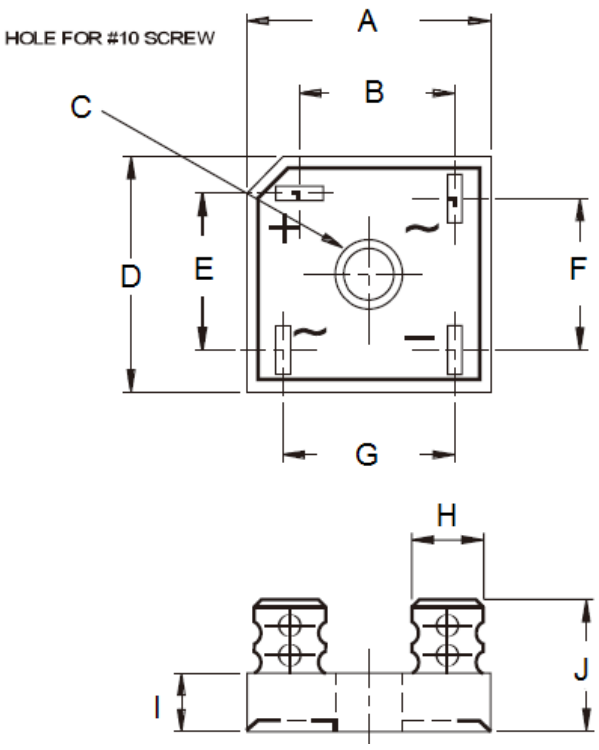

GBPC				
DIM.	Unit (mm)		Unit (inch)	
	Min	Max	Min	Max
A	28.50	29.00	1.122	1.142
B	15.50	17.60	0.610	0.693
C	5.08	5.59	0.200	0.220
D	28.50	29.00	1.122	1.142
E	15.50	17.60	0.610	0.693
F	13.30	15.30	0.524	0.602
G	17.10	19.10	0.673	0.752
H	6.35 (TYP)		0.25 (TYP)	
I	10.97	11.23	0.432	0.442
J	21.50	24.50	0.846	0.965

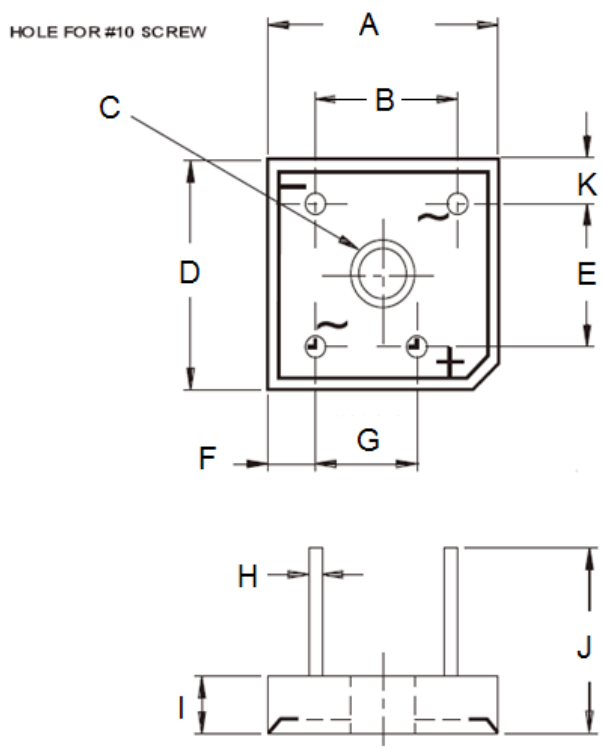

GBPC-W				
DIM.	Unit (mm)		Unit (inch)	
	Min	Max	Min	Max
A	28.50	29.00	1.122	1.142
B	17.10	19.10	0.673	0.752
C	5.08	5.59	0.200	0.220
D	28.50	29.00	1.122	1.142
E	17.10	19.10	0.673	0.752
F	4.40	6.20	0.173	0.244
G	10.40	12.40	0.409	0.488
H	0.97	1.07	0.038	0.042
I	10.97	11.23	0.432	0.442
J	30.50	-	1.201	-
K	4.40	6.20	0.173	0.244

PACKAGE OUTLINE DIMENSIONS

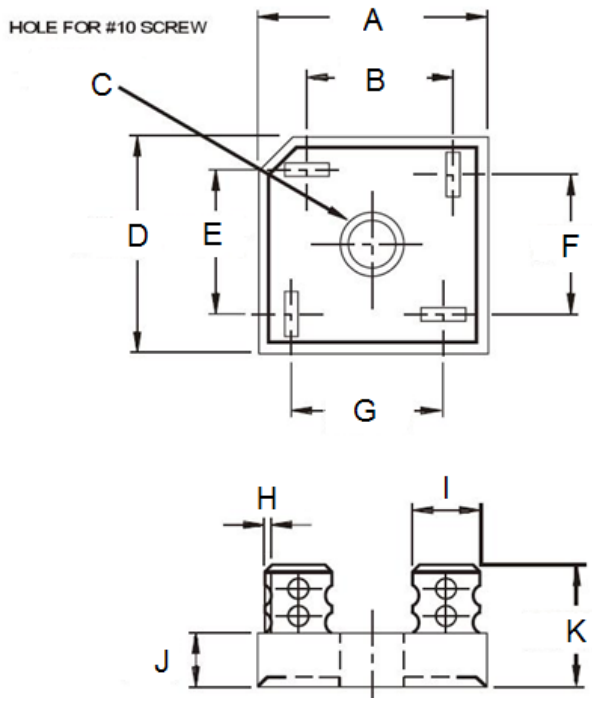

GBPC-M				
DIM.	Unit (mm)		Unit (inch)	
	Min	Max	Min	Max
A	28.50	29.00	1.122	1.142
B	15.50	17.60	0.610	0.693
C	5.08	5.59	0.200	0.220
D	28.50	29.00	1.122	1.142
E	15.50	17.60	0.610	0.693
F	15.50	17.60	0.610	0.693
G	15.50	17.60	0.610	0.693
H	0.76	0.86	0.030	0.034
I	6.6 (TYP)		0.26 (TYP)	
J	10.97	11.23	0.432	0.442
K	21.26	24.57	0.837	0.967

MARKING DIAGRAM

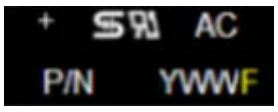

P/N = Specific Device Code
YWW = Date Code
F = Factory Code

Notice

Specifications of the products displayed herein are subject to change without notice. TSC or anyone on its behalf, assumes no responsibility or liability for any errors or inaccuracies.

Information contained herein is intended to provide a product description only. No license, express or implied,to any intellectual property rights is granted by this document. Except as provided in TSC's terms and conditions of sale for such products, TSC assumes no liability whatsoever, and disclaims any express or implied warranty, relating to sale and/or use of TSC products including liability or warranties relating to fitness for a particular purpose, merchantability, or infringement of any patent, copyright, or other intellectual property right.

The products shown herein are not designed for use in medical, life-saving, or life-sustaining applications. Customers using or seling these products for use in such applications do so at their own risk and agree to fully indemnify TSC for any damages resulting from such improper use or sale.