NOTES:

1. ELECTRICAL SPECIFICATIONS:
   C.F. = 499.25 MHz
   INSERTION LOSS @ C.F. = 3.0 dB MIN., 5.5 dB MAX.
   IMPEDANCE: 75 OHMS IN/OUT
   RETURN LOSS = 14 dB MIN. @ 499.25 MHz
   RIPPLE = 0.2 dBc MAX. WITHIN ±0.5 MHz OF C.F.
   ATTENUATION: @ Fo: ±6 MHz @ 18 dBc MIN.
   @ Fo: ±12 MHz @ 28 dBc MIN.
   @ Fo: ±18 MHz @ 45 dBc MIN.
   @ Fo: ±50 MHz @ 40 dBc MIN.
   FROM 50 TO 300 MHz @ 35 dBc MIN.
   FROM 750 TO 862 MHz @ 30 dBc MIN.
2. ENVIRONMENTAL SPECIFICATIONS:
   OPERATING TEMPERATURE: −40° TO +85° C
   STORAGE TEMPERATURE: −40° TO +90° C
3. PART MUST BE MARKED WITH C−COR PART NUMBER. SEE MARKING DETAIL.

REVISIONS

REV	DESCRIPTION	DATE	APPROVED
0	CHANGED PER CN 8468	–	GL
1	CHANGED PER CN 12134	–	GL
2	CHANGED PER CN 99400	–	GL
3	REDRAWN PER ECN04185, MY, 3/10/04	3/11/04	CR
4	REMOVED MARKING INFO PER ECN04917, MY, 1/17/05	1/17/05	FG
5	CHANGED SHLD DIM PER ECN06642, MY, 9/08/08	9/08/08	FG

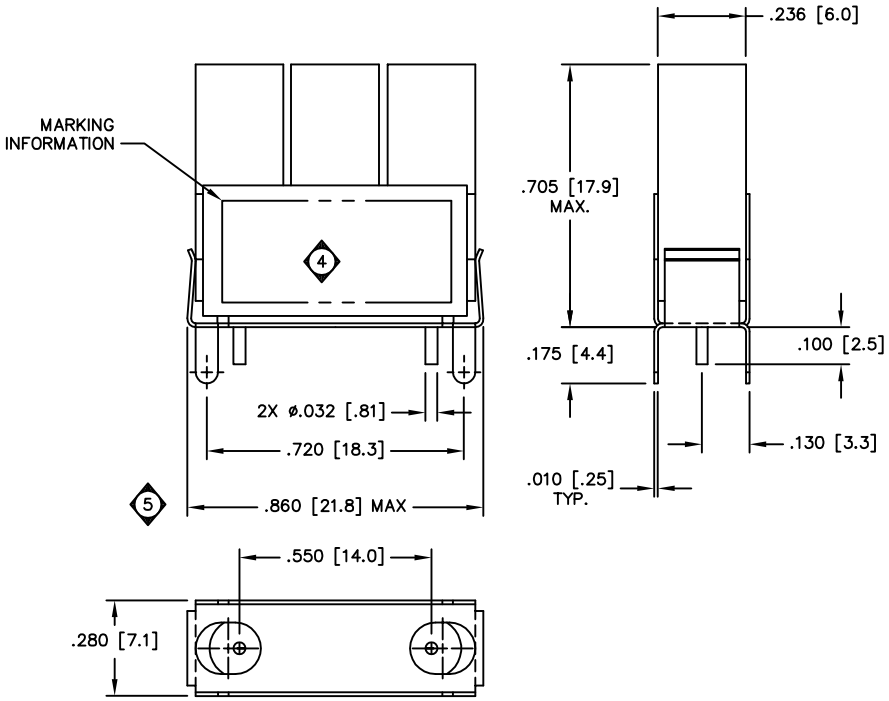

UNLESS OTHERWISE SPECIFIED
ALL DIMENSIONS ARE IN INCHES
DIMENSIONS APPLY AFTER PLATING
INTERPRET DIM. AND TOL. PER
ASME Y14.5M − 1994
TOLERANCES:
.XX±.01 .XXX±.005 ∠ ±.50°
BREAK ALL SHARP EDGES AND DEBURR

Spectrum Microwave, Inc.
COLUMBIA, MARYLAND USA

SALES DRAWING,
BPF3−0499−005LA

DRAWN	M.YAKER	3/10/04
CHECKED		
ENG.	C.RIDDLE	3/11/04
MAN.	–	–
Q.C.	–	–
APPROVED	SB	3/11/04

SIZE	CAGE CODE	DRAWING NO.	REV
C	67195	STO−4783	5

SCALE 4/1 | DO NOT SCALE PRINTS | SHEET 1 OF 1

All technical information and the design disclosure in this drawing or in any accompanying technical data was originated by and is the property of Spectrum Microwave, Inc. All patent, proprietary, design, manufacturing, reproduction, use and sales rights in any information disclosed herein are reserved by Spectrum Microwave, Inc. No right or license to use any such information for any purpose other than as agreed to by Spectrum Microwave, Inc. is prohibited without written permission of Spectrum Microwave, Inc.

F−0010, REV A, 11/4/99

STO−4783