103SR14A-1

4.5 TO 24 VDC UNIPOLAR DEVICE

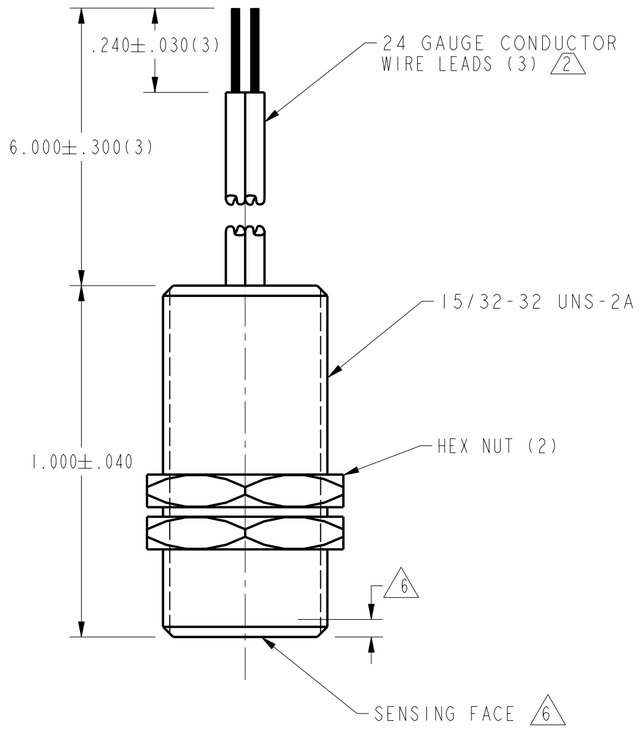

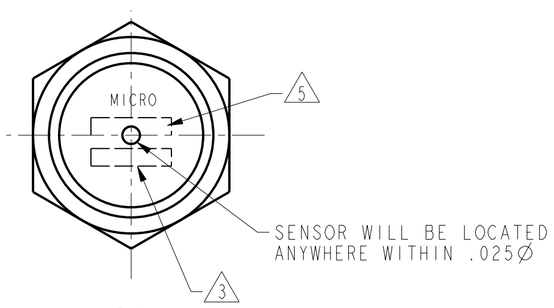

FIG. 1

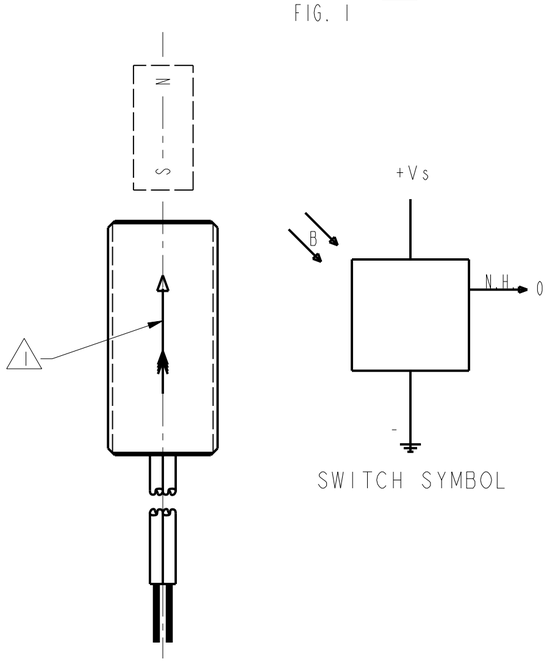

SWITCH SYMBOL

FIG. 2
OPERATE

OPERATING CHARACTERISTICS 1 4

GAUSS	
OPERATE MAX	160
RELEASE MIN	5
DIFF MIN	8

ABSOLUTE MAXIMUM RATINGS

SUPPLY VOLTAGE (Vs) 8	-1.0 VDC TO +25.0 VDC
VOLTAGE EXTERNALLY APPLIED TO OUTPUT	+25 VOLTS DC MAX WITH SWITCH IN "OFF" CONDITION ONLY -0.5 VOLTS MAX WITH SWITCH IN "OFF" OR "ON" CONDITION
OUTPUT CURRENT	40 mA (SINK PER OUTPUT)
TEMPERATURE OPERATE AND STORAGE	-40° C TO 100° C
MAGNETIC FLUX	NO LIMIT, THE CIRCUIT CANNOT BE DAMAGED BY MAGNETIC OVERDRIVE

ELECTRICAL CHARACTERISTICS

	MIN	TYP	MAX	REMARKS
SUPPLY CURRENT 7			10.0 mA	ON CONDITION
OUTPUT VOLTAGE (OPERATED)			0.4 V	SINKING 20 mA PER OUTPUT
OUTPUT LEAKAGE CURRENT (RELEASED)			20μ A	LEAKAGE INTO SWITCH OUTPUT
OUTPUT SWITCHING TIME (SINKING 20 mA) RISE TIME 4 FALL TIME			 1.5μ SEC 0.5μ SEC	 10% TO 90% 90% TO 10%

NOTE: THIS DEVICE IS NOT PROTECTED AGAINST HIGH ELECTRICAL NOISE. IF ERRATIC OPERATION OCCURS AFTER INSTALLATION, INSTALL A CAPACITOR ACROSS THE INPUT TERMINALS (0.1 MFD). IF ERRATIC OPERATION CONTINUES, YOU MAY HAVE TO USE THE INDUSTRIAL DEVICES THAT MICRO SWITCH MANUFACTURES. PLEASE CONTACT YOUR LOCAL FIELD REPRESENTATIVE FOR INFORMATION.

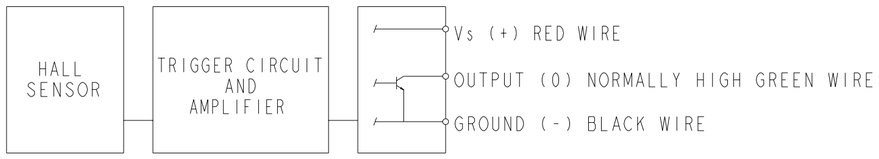

BLOCK DIAGRAM SHOWING CURRENT SINKING OUTPUTS

NOTES

1. FLUX ENTERING THE SOUTH POLE OF THE MAGNET WILL OPERATE THE SENSOR WHEN MAGNET IS POSITIONED AS SHOWN IN FIGURE 2. THIS ASSUMES THE CONVENTION THAT THE DIRECTION OF THE EXTERNAL FLUX OF A MAGNET IS FROM THE NORTH TO THE SOUTH POLE OF THE MAGNET
2. LEADWIRES (INDIVIDUAL WIRES) ARE 24 GAGE STRANDED WITH IRRADIATED POLYETHYLENE INSULATION
3. DATE CODE LOCATED IN THIS AREA
4. FROM -40° C TO 100° C AND 4.5 TO 24 VOLTS
5. CATALOG LISTING LOCATED IN THIS AREA
6. SENSITIVE AREA IS LOCATED .050 BEHIND THE SENSING FACE
7. AT 24°±2° C
8. Vs IS THE UNREGULATED SUPPLY VOLTAGE

CAUTION
ELECTROSTATIC SENSITIVE DEVICES
DO NOT OPEN OR HANDLE EXCEPT AT A STATIC FREE WORKSTATION

ESD SENSITIVITY: CLASS 3

ANSI Y14.5M 1982 APPLIES

THIS DRAWING COVERS A PROPRIETARY ITEM AND IS THE PROPERTY OF MICRO SWITCH. A DIVISION OF HONEYWELL. THIS DRAWING IS NOT TO BE COPIED OR USED WITHOUT THE APPROVAL OF MICRO SWITCH.

MICRO SWITCH
a Honeywell Division
FED. MFG. CODE 91929

MAGNETICALLY OPERATED CYLINDRICAL HALL SWITCH

CATALOG LISTING
103SR14A-1

THIRD ANGLE PROJECTION

SCALE 3 : 1

DO NOT SCALE PRINT

UNLESS OTHERWISE SPECIFIED TOLERANCES ARE

ONE PLACE	(.0)	±.030
TWO PLACES	(.00)	±.015
THREE PLACES	(.000)	±.005
ANGLES		±

WEIGHT

103SR14A-1 PAGE 1 OF 1 RELEASE NO. PR-20629 REPLACES
DRAWING NUMBER
ISSUE 4
REVISIONS
A C095082A TSM 27JUL99
B 201747 JLH DEC00
CHECK
CHECK 27JUL99
JAF
CHECK
PTC/CAD 2D
DRAWN TSM 27JUL99