Alle Rechte vorbehalten/ *All rights reserved*

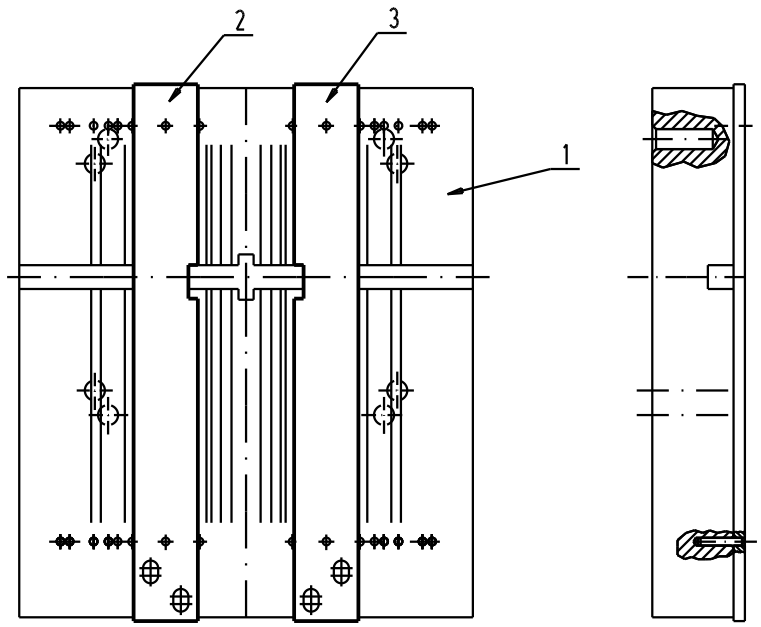

Part 1 : Base plate for SEK 18

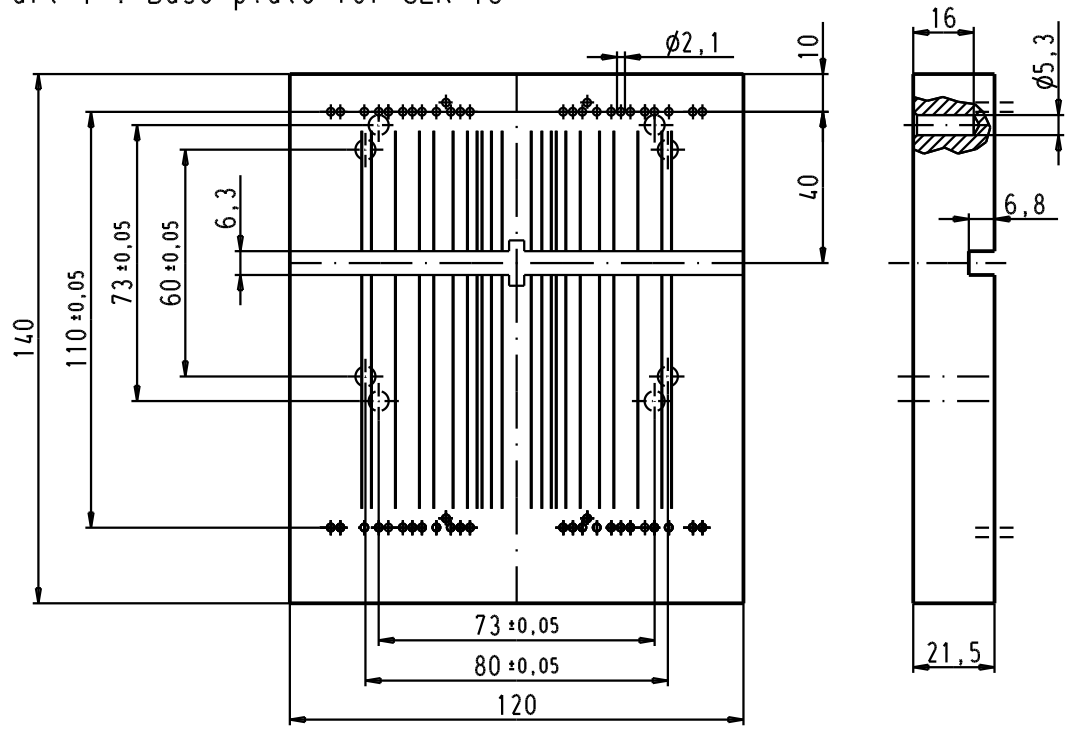

Part 2 : cable guide (left) for SEK 18

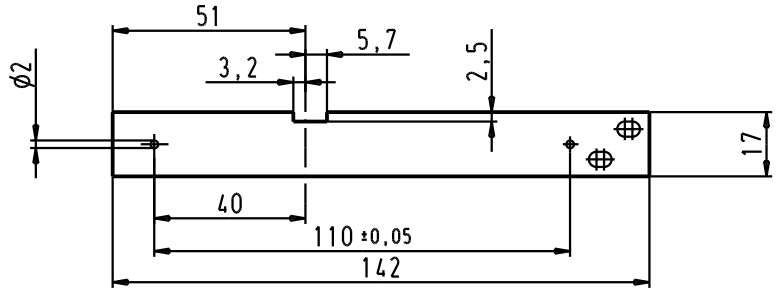

Part 3 : cable guide (right) for SEK 18

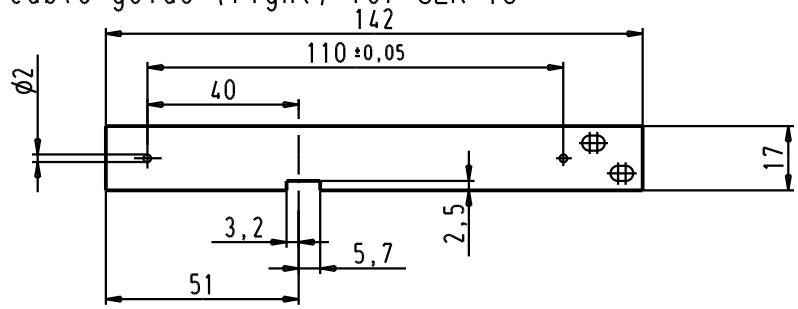

29778	25-APR-02	CV
Mod.	Dat.	Name

	Dat.	Name
Detail.	25-APR-02	CV
Insp.		
Stand.		

All Dim. in mm
Orig. Size DIN A 4

Base plate for SEK 18

Maßstab/ *Scale* 0.5:1

HARTING EURL
F-95972 Paris

TB 09990000115

Sub.

Blatt/ *Page* 1/1