RADIALL The next conneXion

TECHNICAL DATA SHEET

616 9**

Series		Issue:	Page
DSX	SEALING PLUGS FOR UNUSED CONTACTS CAVITIES ENVIRONMENTAL TYPE CONNECTORS PER MS27488	JAN 25, 2010	1/1

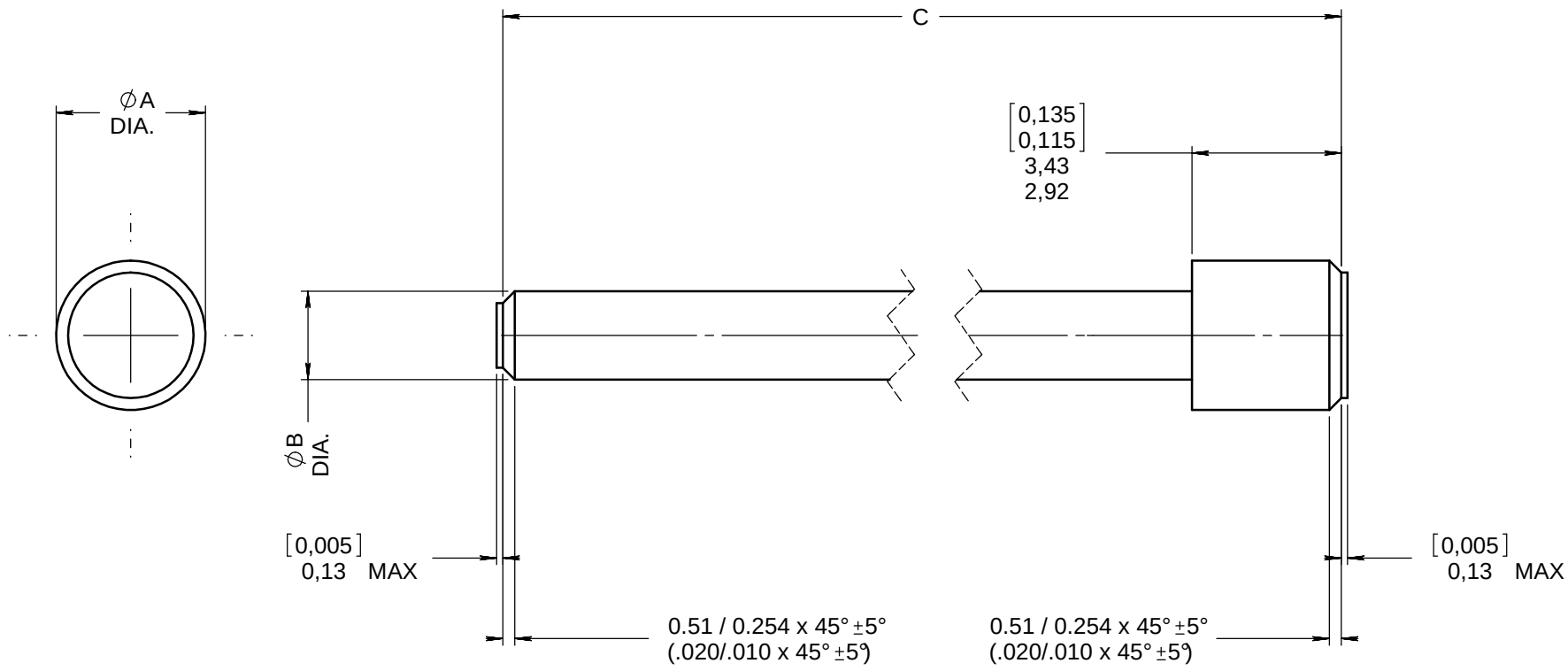

SIZE	RADIALL P/N	MS P/N	COLOR	∅A DIA.	∅B DIA.	C DIMENSION
22	616910	MS27488-22-2	BLACK	1.676 (0.066) 1.473 (0.058)	1.143 (0.045) 0.965 (0.038)	12,700 (0.500) 11,125 (0.438)
20	616911	MS27488-20-2	RED	2.286 (0.090) 2.032 (0.080)	1.473 (0.058) 1.219 (0.048)	20.447 (0.805) 19.177 (0.755)
16	616912	MS27488-16-2	GREEN	3.302 (0.130) 3.048 (0.120)	2.007 (0.079) 1.753 (0.069)	22,149 (0.872) 20,879 (0.822)
12	616913	MS27488-12-2	ORANGE	4.318 (0.170) 4.064 (0.160)	3.175 (0.125) 2.921 (0.115)	21,361 (0.841) 20,091 (0.791)

MATERIALS: PTFE FOLLOWING ASTM-D1710
OR
FEP FOLLOWING ASTM-D2116
OR
PFA FOLLOWING ASTM-D3307

IMPORTANT : DO NOT USE THE PPSU

USE AND INSTALLATION : SEE MS27488 (IMPORTANT)

DIMENSIONS : mm (inch are given for information only)

CREATION				
PEN:				
	JAN 25, 10	DIMENSION AND COLOUR MATERIALS CHANGED PER MS27488 Rev N -	MONDOT JC.	BROCHET L.
NOM: GESBERT	31/10/08	M --> N (#16: C DIM CHANGED) MATERIALS CHANGED	GELLUSSEAU	BROCHET
DATE: 08.06.82	26/03/03	REDRAWN; MS27488M WAS MS27488	GOMBERT	/
APPR.:	Issue	Revisions	Name	Approved

This information is given as an indication.In the continual goal to improve our products,we reserve the right to make any modifications judged necessary.