440-063
EMI/RFI Crimp Ring Adapter
Rotatable Coupling - Standard Profile

CONNECTOR DESIGNATORS

A-F-H-L-S

ROTATABLE COUPLING

440 F S 063 M 16 32-6

- Product Series
- Connector Designator
- Angle and Profile
  - H = 45°
  - J = 90°
  - S = Straight
- Basic Part No.
- Finish (Table II)
- Shell Size (Table I)
- Cable Entry (Table IV)
- Length: S only (1/2 inch increments: e.g. 6 = 3 inches)

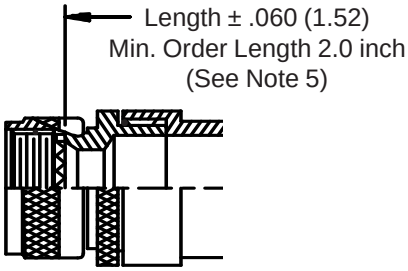

STYLE 2 (STRAIGHT See Note 1)

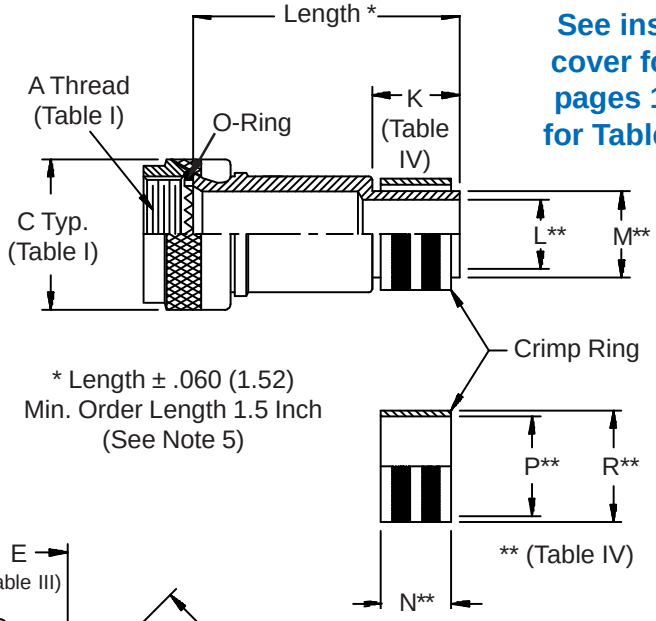

See inside back cover fold-out or pages 13 and 14 for Tables I and II.

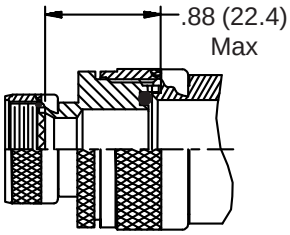

STYLE 2 (45° & 90° See Note 1)

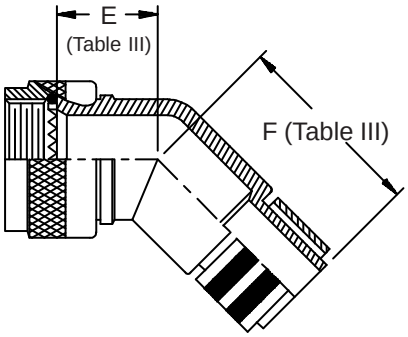

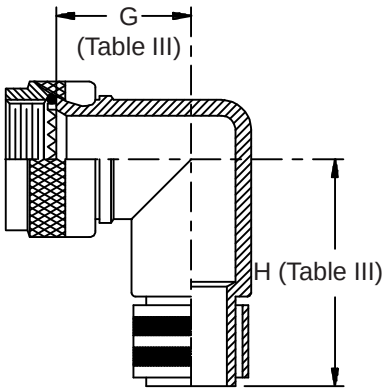

-445 **Add "-445" to Specify Glenair's Non-Detent, ("NESTOR") Spring-Loaded, Self-Locking Coupling. See Page 41 for Details.**

Metric dimensions (mm) are indicated in parentheses.

© 2005 Glenair, Inc. CAGE Code 06324 Printed in U.S.A.

440-063
EMI/RFI Crimp Ring Adapter
Rotatable Coupling - Standard Profile

Glenair®

TABLE III: ELBOW DIMENSIONS

Shell Size Conn. Desig. A-F-L-S	H	E Max		F Max		G Max		H Max	
08	09	.639	(16.2)	.702	(17.8)	.750	(19.1)	.812	(20.6)
10	11	.664	(16.9)	.732	(18.6)	.812	(20.6)	.875	(22.2)
12	13	.688	(17.5)	1.040	(26.4)	.875	(22.2)	1.220	(31.0)
14	15	.705	(17.9)	1.070	(27.2)	.920	(23.4)	1.290	(32.8)
16	17	.732	(18.6)	1.090	(27.7)	.980	(24.9)	1.350	(34.3)
18	19	.748	(19.0)	1.100	(27.9)	1.020	(25.9)	1.370	(34.8)
20	21	.773	(19.6)	1.120	(28.4)	1.080	(27.4)	1.430	(36.3)
22	23	.800	(20.3)	1.160	(29.5)	1.140	(29.0)	1.510	(38.4)
24	25	.823	(20.9)	1.190	(30.2)	1.200	(30.5)	1.580	(40.1)

1. When maximum cable entry (page 21) is exceeded, Style 2 will be supplied. Dimensions E, F, G and H will not apply. Please consult factory.
2. For proper installation of crimp ring, use Thomas & Betts (or equivalent) installation dies listed (Table IV) for each dash no.
3. Dimensions shown are not intended for inspection criteria.
4. Consult factory for shorter lengths on straight backshells.
5. Interface O-Ring not supplied with Connector Designator A.

TABLE IV: CABLE ENTRY

Dash No.	K Nom		L Nom		M Nom		N Nom		P Nom		R Nom		Color Code (Ref.)	Inst. Tool Die No. (Note 2)
06	.312	(7.9)	.090	(2.3)	.113	(2.9)	.250	(6.4)	.156	(4.0)	.194	(4.9)	Yellow	WT402
10	.312	(7.9)	.124	(3.1)	.145	(3.7)	.250	(6.4)	.187	(4.7)	.227	(5.8)	Orange	WT406
13	.312	(7.9)	.149	(3.8)	.179	(4.5)	.250	(6.4)	.225	(5.7)	.256	(6.5)	Purple	WT409
16	.312	(7.9)	.175	(4.4)	.215	(5.5)	.250	(6.4)	.261	(6.6)	.297	(7.5)	Yellow	WT411
20	.312	(7.9)	.219	(5.6)	.250	(6.4)	.250	(6.4)	.297	(7.5)	.335	(8.5)	Green	WT414
23	.312	(7.9)	.250	(6.4)	.281	(7.1)	.250	(6.4)	.327	(8.3)	.372	(9.4)	Tin	WT416
26	.312	(7.9)	.275	(7.0)	.306	(7.8)	.250	(6.4)	.375	(9.5)	.406	(10.3)	Yellow	WT440/5451
29	.312	(7.9)	.297	(7.5)	.335	(8.5)	.250	(6.4)	.405	(10.3)	.453	(11.5)	Red	WT440/5452
30	.312	(7.9)	.312	(7.9)	.365	(9.3)	.250	(6.4)	.425	(10.8)	.473	(12.0)	Tin	WT440/5454
31	.312	(7.9)	.375	(9.5)	.406	(10.3)	.250	(6.4)	.500	(12.7)	.560	(14.2)	Green	WT440/5457
32	.600	(15.2)	.430	(10.9)	.500	(12.7)	.440	(11.2)	.590	(15.0)	.670	(17.0)	Red	GS590
33	.600	(15.2)	.550	(14.0)	.620	(15.7)	.440	(11.2)	.710	(18.0)	.790	(20.1)	Blue	GS710
34	.600	(15.2)	.670	(17.0)	.750	(19.1)	.440	(11.2)	.840	(21.3)	.920	(23.4)	Gray	GS840
35	.600	(15.2)	.810	(20.6)	.880	(22.4)	.440	(11.2)	1.010	(25.7)	1.090	(27.7)	Brown	GS1010
36	.600	(15.2)	.920	(23.4)	1.000	(25.4)	.440	(11.2)	1.130	(28.7)	1.210	(30.7)	Green	GS1130
38	.600	(15.2)	1.040	(26.4)	1.120	(28.4)	.440	(11.2)	1.250	(31.8)	1.330	(33.8)	Pink	GS1250
39	.600	(15.2)	1.122	(28.5)	1.192	(30.3)	.440	(11.2)	1.332	(33.8)	1.412	(35.9)	Orange	GS1332
40	.600	(15.2)	1.224	(31.1)	1.294	(32.9)	.440	(11.2)	1.440	(36.6)	1.520	(38.6)	Purple	GS1440
41	.600	(15.2)	1.353	(34.4)	1.423	(36.1)	.440	(11.2)	1.562	(39.7)	1.643	(41.7)	Yellow	GS1563
42	.600	(15.2)	1.425	(36.2)	1.545	(39.2)	.440	(11.2)	1.670	(42.4)	1.750	(44.5)	Red	GS1670
43	.600	(15.2)	1.550	(39.4)	1.670	(42.4)	.440	(11.2)	1.795	(45.6)	1.875	(47.6)	Blue	GS1795
44	.600	(15.2)	1.675	(42.5)	1.795	(45.6)	.440	(11.2)	1.920	(48.8)	2.000	(50.8)	Gray	GS1920
45	.600	(15.2)	1.800	(45.7)	1.920	(48.8)	.440	(11.2)	2.045	(51.9)	2.125	(54.0)	Brown	GS2045
46	.600	(15.2)	1.925	(48.9)	2.045	(51.9)	.440	(11.2)	2.170	(55.1)	2.250	(57.2)	Green	GS2170
47	.600	(15.2)	2.050	(52.1)	2.170	(55.1)	.440	(11.2)	2.295	(58.3)	2.375	(60.3)	Pink	GS2295
48	.600	(15.2)	2.175	(55.2)	2.295	(58.3)	.440	(11.2)	2.420	(61.5)	2.500	(63.5)	Orange	GS2420
49	.600	(15.2)	2.300	(58.4)	2.420	(61.5)	.440	(11.2)	2.545	(64.6)	2.625	(66.7)	Purple	GS2545
50	.600	(15.2)	2.425	(61.6)	2.545	(64.6)	.440	(11.2)	2.670	(67.8)	2.750	(69.9)	Yellow	GS2670
51	.600	(15.2)	2.530	(64.3)	2.670	(67.8)	.440	(11.2)	2.795	(71.0)	2.875	(73.0)	Red	GS2795
52	.600	(15.2)	2.655	(67.4)	2.795	(71.0)	.440	(11.2)	2.920	(74.2)	3.000	(76.2)	Blue	GS2920
53	.600	(15.2)	2.780	(70.6)	2.920	(74.2)	.440	(11.2)	3.045	(77.3)	3.125	(79.4)	Gray	GS3045
54	.600	(15.2)	2.905	(73.8)	3.045	(77.3)	.440	(11.2)	3.170	(80.5)	3.250	(82.6)	Brown	GS3170

© 2005 Glenair, Inc. CAGE Code 06324 Printed in U.S.A.