STD180N4F6

N-channel 40 V, 2.5 mΩ typ., 80 A STripFET™ F6 Power MOSFET in a DPAK package

Datasheet - preliminary data

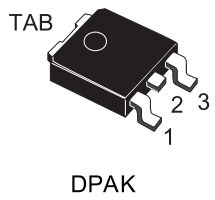

Figure 1: Internal schematic diagram

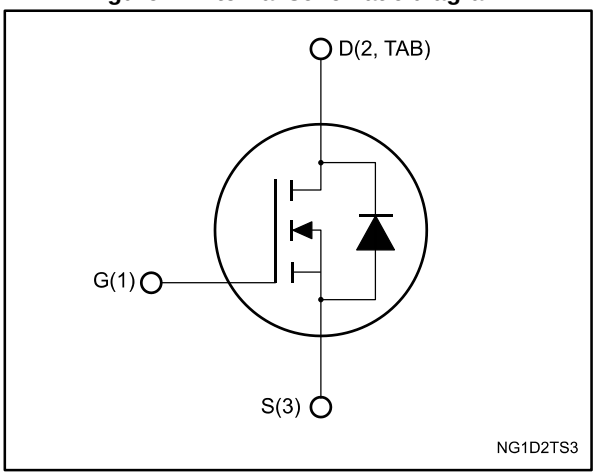

Features

Order code	V_{DS}	$R_{DS(on)}$ max.	I_D	P_{TOT}
STD180N4F6	40 V	2.8 mΩ	80 A	130 W

- Very low on-resistance
- Very low gate charge
- High avalanche ruggedness
- Low gate drive power loss

Applications

- Switching applications
- Power tools

Description

This device is an N-channel Power MOSFET developed using the STripFET™ F6 technology with a new trench gate structure. The resulting Power MOSFET exhibits very low $R_{DS(on)}$ in all packages.

Table 1: Device summary

Order code	Marking	Package	Packing
STD180N4F6	180N4F6	DPAK	Tape and reel

This is preliminary information on a new product now in development or undergoing evaluation. Details are subject to change without notice.

www.st.com

Contents

1 Electrical ratings 3

2 Electrical characteristics 4

2.1 Electrical characteristics (curves) 6

3 Test circuits 8

4 Package information 9

4.1 DPAK package information 10

4.2 DPAK packing information 13

5 Revision history 15

1 Electrical ratings

Table 2: Absolute maximum ratings

Symbol	Parameter	Value	Unit
V_{DS}	Drain-source voltage	40	V
V_{GS}	Gate-source voltage	±20	V
I_D[(1)]	Drain current (continuous) at T_{case} = 25 °C	80	A
	Drain current (continuous) at T_{case} = 100 °C	80	
I_{DM}	Drain current (pulsed)	320	A
P_{TOT}	Total dissipation at T_{case} = 25 °C	130	W
T_{stg}	Storage temperature range	-55 to 175	°C
T_j	Operating junction temperature range		

Notes:

(1) Limited by package

Table 3: Thermal data

Symbol	Parameter	Value	Unit
$R_{thj-case}$	Thermal resistance junction-case	1.15	°C/W
$R_{thj-amb}$[(1)]	Thermal resistance junction-pcb	50	

Notes:

(1) When mounted on FR-4 board of 1 inch2, 2 oz Cu.

2 Electrical characteristics

(T_{case} = 25 °C unless otherwise specified)

Table 4: Static

Symbol	Parameter	Test conditions	Min.	Typ.	Max.	Unit
$V_{(BR)DSS}$	Drain-source breakdown voltage	V_{GS} = 0 V, I_D = 250 µA	40			V
I_{DSS}	Zero gate voltage drain current	V_{GS} = 0 V, V_{DS} = 40 V			1	µA
		V_{GS} = 0 V, V_{DS} = 40 V, T_{case} = 125 °C			100	
I_{GSS}	Gate-body leakage current	V_{DS} = 0 V, V_{GS} = ±20 V			±100	nA
$V_{GS(th)}$	Gate threshold voltage	V_{DS} = V_{GS}, I_D = 250 µA	3		4.5	V
$R_{DS(on)}$	Static drain-source on-resistance	V_{GS} = 10 V, I_D = 40 A		2.5	2.8	mΩ

Table 5: Dynamic

Symbol	Parameter	Test conditions	Min.	Typ.	Max.	Unit
C_{iss}	Input capacitance	V_{DS} = 25 V, f = 1 MHz, V_{GS} = 0 V	-	7735	-	pF
C_{oss}	Output capacitance		-	745	-	
C_{rss}	Reverse transfer capacitance		-	560	-	
Q_g	Total gate charge	V_{DD} = 20 V, I_D = 80 A, V_{GS} = 10 V (see *Figure 14: "Test circuit for gate charge behavior"*)	-	130	-	nC
Q_{gs}	Gate-source charge		-	36	-	
Q_{gd}	Gate-drain charge		-	42	-	

Table 6: Switching times

Symbol	Parameter	Test conditions	Min.	Typ.	Max.	Unit
$t_{d(on)}$	Turn-on delay time	V_{DD} = 20 V, I_D = 40 A R_G = 4.7 Ω, V_{GS} = 10 V (see *Figure 13: "Test circuit for resistive load switching times"* and *Figure 18: "Switching time waveform"*)	-	24	-	ns
t_r	Rise time		-	150	-	
$t_{d(off)}$	Turn-off delay time		-	106	-	
t_f	Fall time		-	57	-	

Table 7: Source-drain diode

Symbol	Parameter	Test conditions	Min.	Typ.	Max.	Unit
V_{SD}[(1)]	Forward on voltage	V_{GS} = 0 V, I_{SD} = 80 A	-		1.3	V
t_{rr}	Reverse recovery time	I_{SD} = 80 A, di/dt = 100 A/µs, V_{DD} = 32 V, T_j = 25 °C (see *Figure 15: "Test circuit for inductive load switching and diode recovery times"*)	-	36		ns
Q_{rr}	Reverse recovery charge		-	40		nC
I_{RRM}	Reverse recovery current		-	2.3		A

Notes:

(1) Pulse test: pulse duration = 300 µs, duty cycle 1.5%.

2.1 Electrical characteristics (curves)

Figure 2: Safe operating area

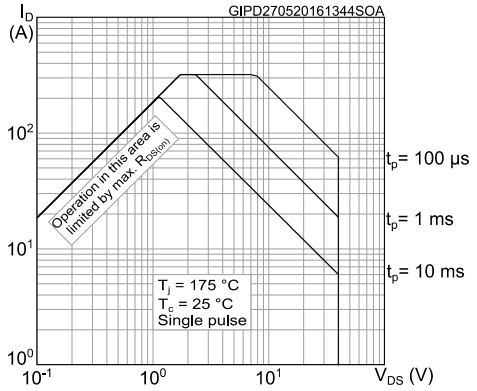

Figure 3: Thermal impedance

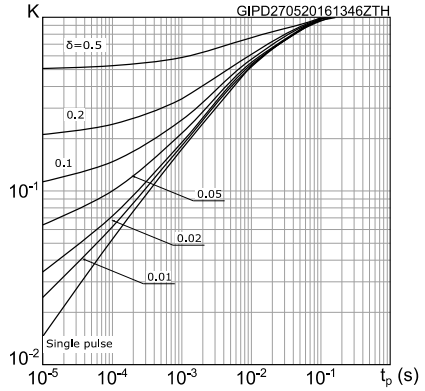

Figure 4: Output characteristics

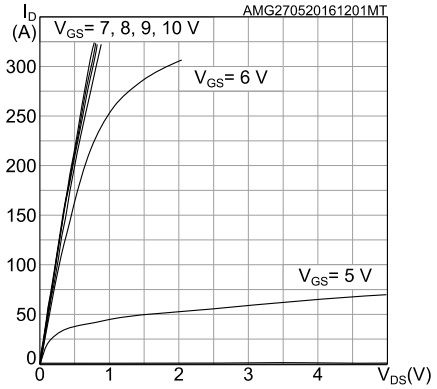

Figure 5: Transfer characteristics

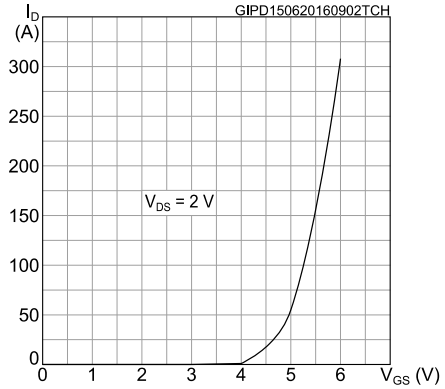

Figure 6: Gate charge vs gate-source voltage

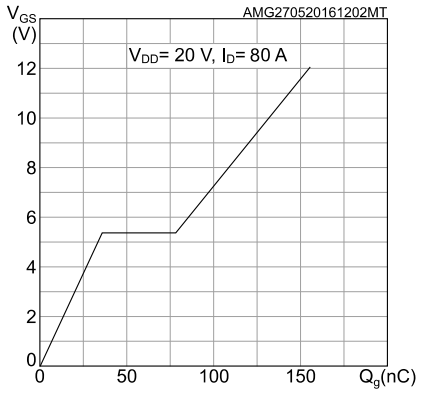

Figure 7: Static drain-source on-resistance

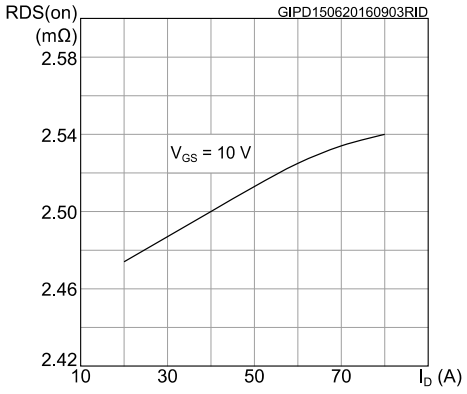

Figure 8: Capacitance variations

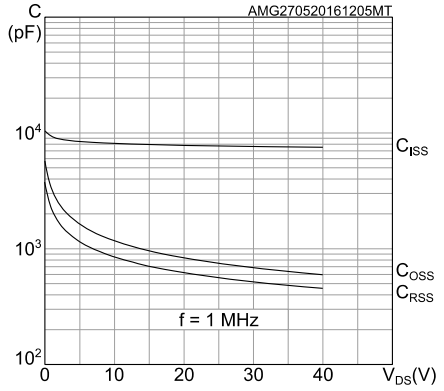

Figure 9: Normalized gate threshold voltage vs temperature

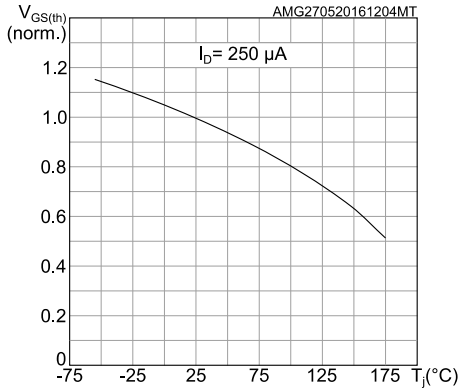

Figure 10: Normalized on-resistance vs temperature

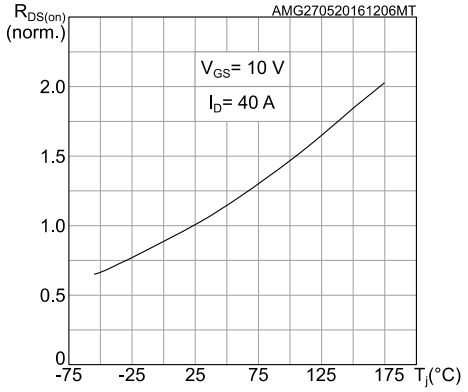

Figure 11: Normalized $V_{(BR)DSS}$ vs temperature

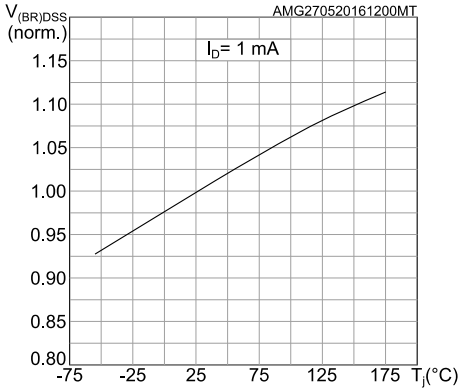

Figure 12: Source-drain diode forward characteristics

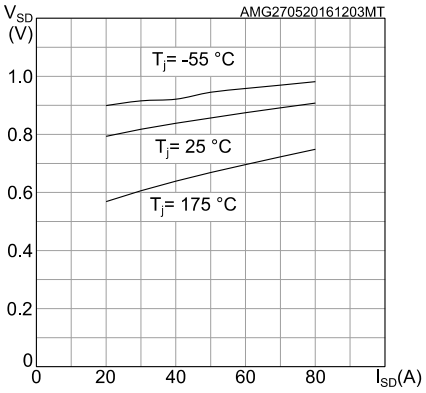

3 Test circuits

Figure 13: Test circuit for resistive load switching times

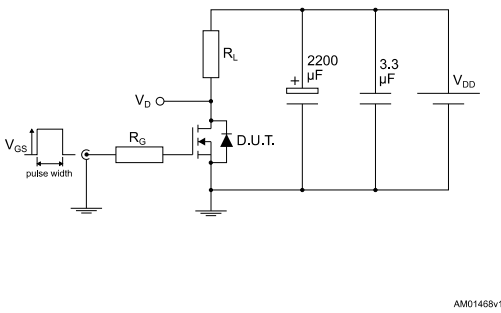

Figure 14: Test circuit for gate charge behavior

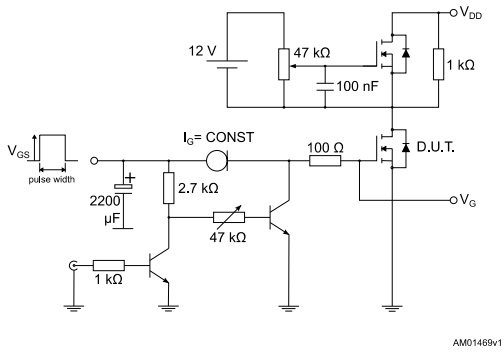

Figure 15: Test circuit for inductive load switching and diode recovery times

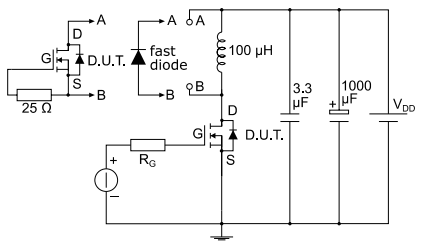

Figure 16: Unclamped inductive load test circuit

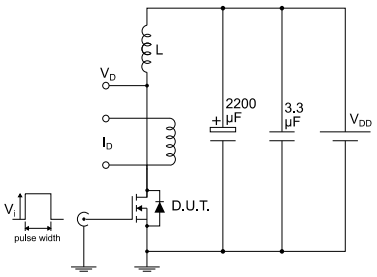

Figure 17: Unclamped inductive waveform

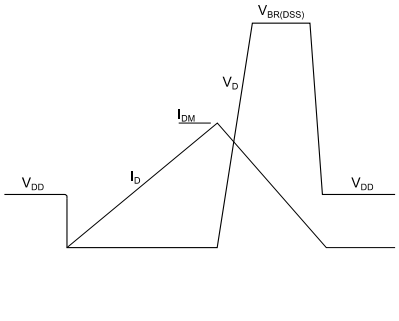

Figure 18: Switching time waveform

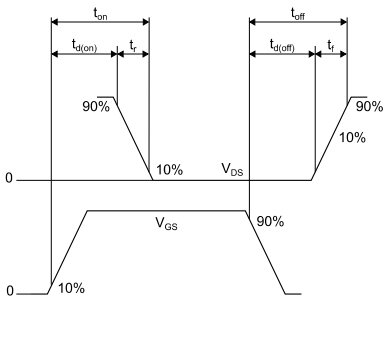

4 Package information

In order to meet environmental requirements, ST offers these devices in different grades of ECOPACK® packages, depending on their level of environmental compliance. ECOPACK® specifications, grade definitions and product status are available at: ***www.st.com***. ECOPACK® is an ST trademark.

4.1 DPAK package information

Figure 19: DPAK (TO-252) type A2 package outline

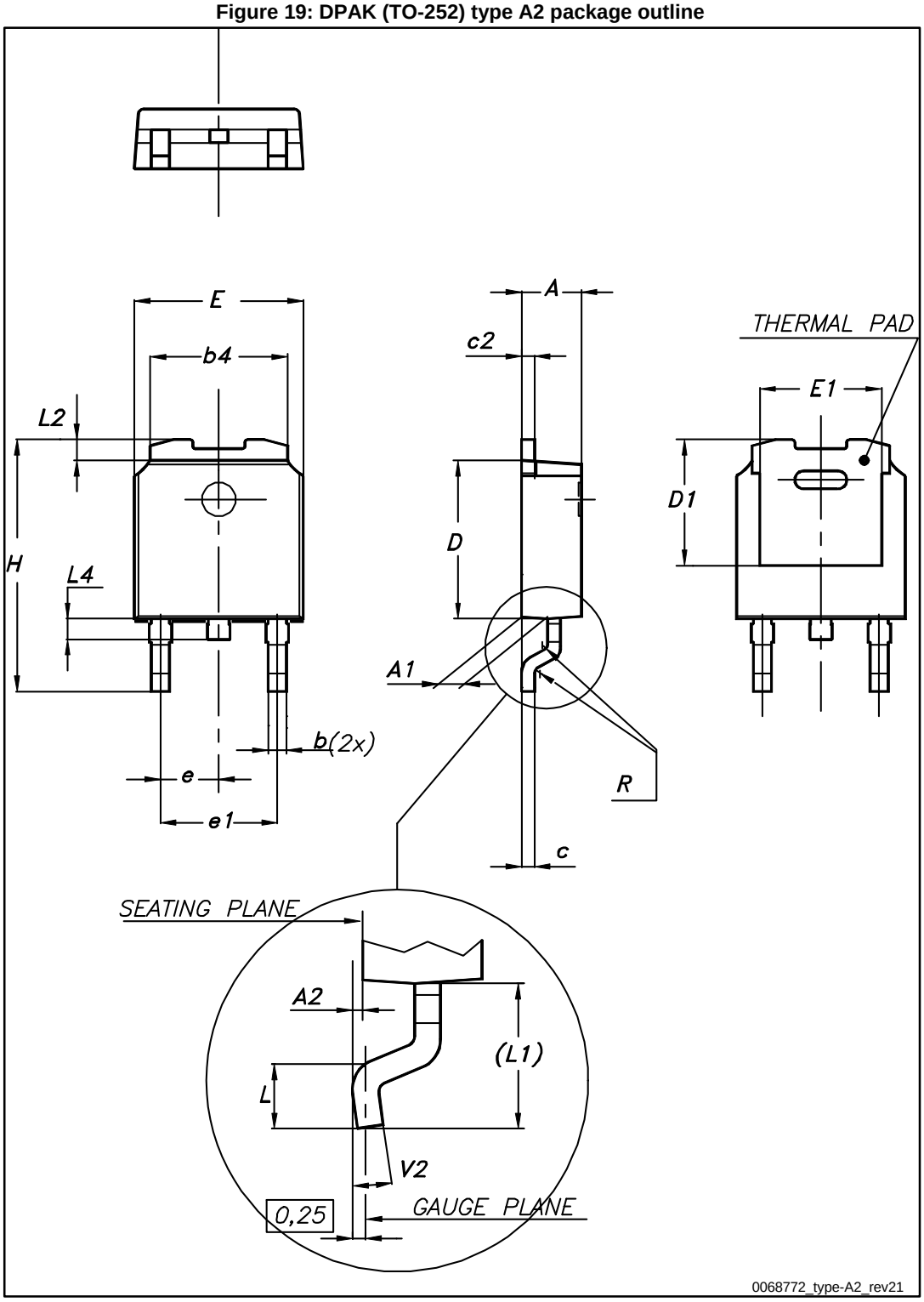

Table 8: DPAK (TO-252) type A2 mechanical data

Dim.	mm		
	Min.	Typ.	Max.
A	2.20		2.40
A1	0.90		1.10
A2	0.03		0.23
b	0.64		0.90
b4	5.20		5.40
c	0.45		0.60
c2	0.48		0.60
D	6.00		6.20
D1	4.95	5.10	5.25
E	6.40		6.60
E1	5.10	5.20	5.30
e	2.16	2.28	2.40
e1	4.40		4.60
H	9.35		10.10
L	1.00		1.50
L1	2.60	2.80	3.00
L2	0.65	0.80	0.95
L4	0.60		1.00
R		0.20	
V2	0°		8°

Figure 20: DPAK (TO-252) recommended footprint (dimensions are in mm)

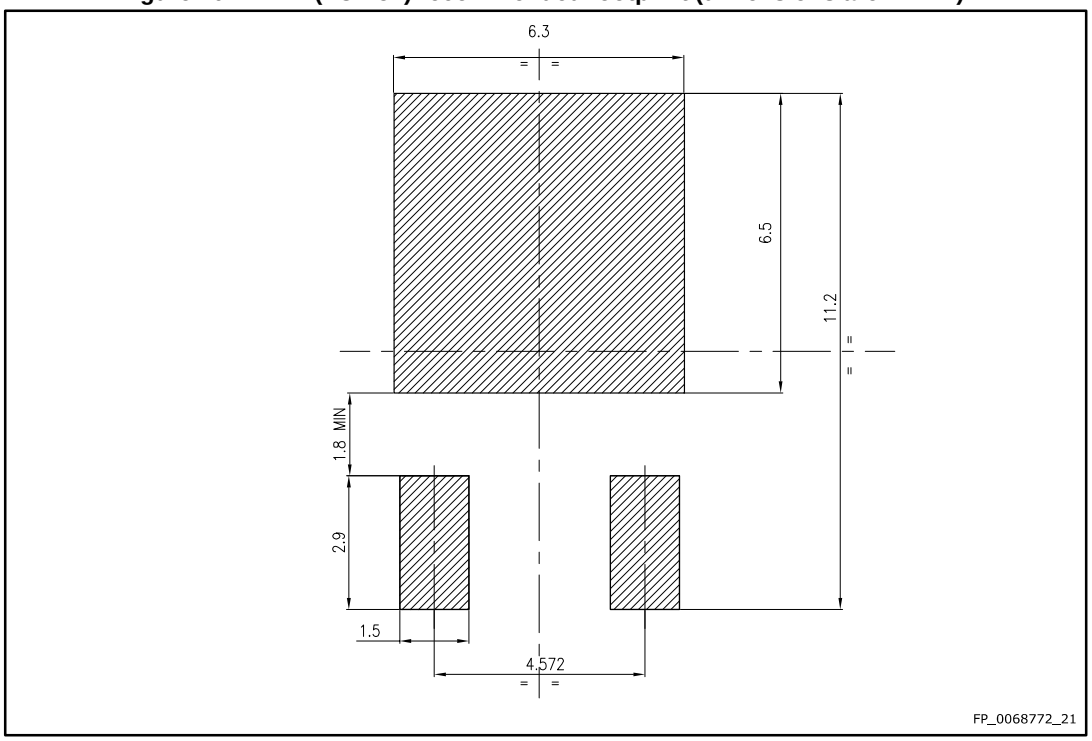

4.2 DPAK packing information

Figure 21: DPAK (TO-252) tape outline

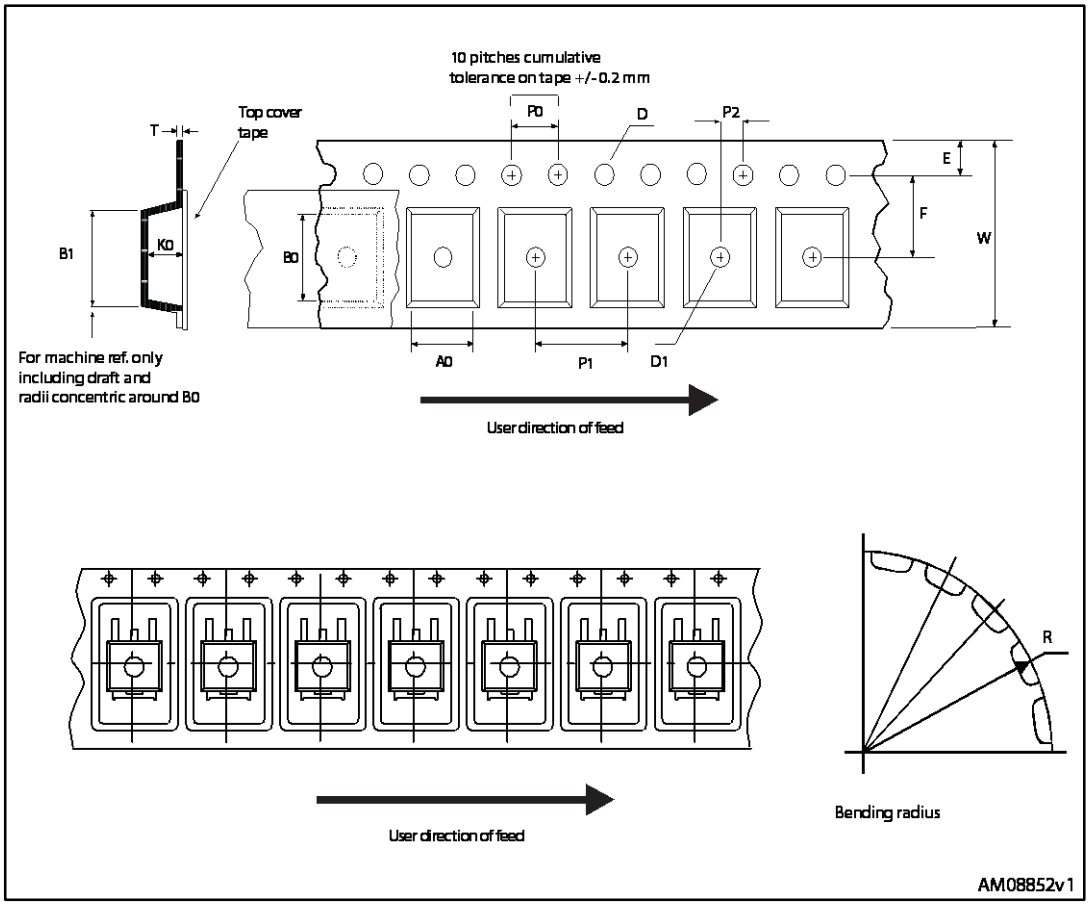

Figure 22: DPAK (TO-252) reel outline

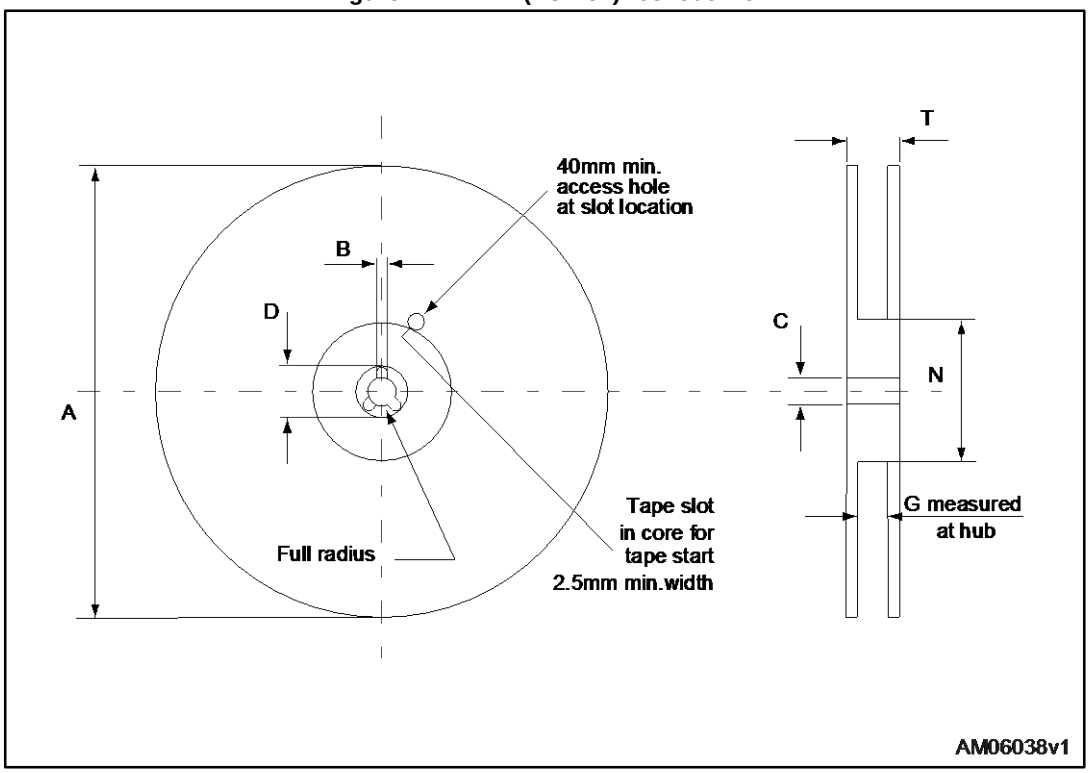

Table 9: DPAK (TO-252) tape and reel mechanical data

Tape			Reel		
Dim.	mm		Dim.	mm	
	Min.	Max.		Min.	Max.
A0	6.8	7	A		330
B0	10.4	10.6	B	1.5	
B1		12.1	C	12.8	13.2
D	1.5	1.6	D	20.2	
D1	1.5		G	16.4	18.4
E	1.65	1.85	N	50	
F	7.4	7.6	T		22.4
K0	2.55	2.75			
P0	3.9	4.1	Base qty.		2500
P1	7.9	8.1	Bulk qty.		2500
P2	1.9	2.1			
R	40				
T	0.25	0.35			
W	15.7	16.3			

5 Revision history

Table 10: Document revision history

Date	Revision	Changes
10-Nov-2015	1	First release.
26-Jul-2016	2	Updated title in cover page. Updated $R_{DS(on)\ max.}$ value in Features. Updated *Table 4: "Static"* and *Table 5: "Dynamic"*. Added *Section 2.1: "Electrical characteristics (curves)"* and *Section 4.2: "DPAK packing information"*. Minor text changes.

IMPORTANT NOTICE – PLEASE READ CAREFULLY

STMicroelectronics NV and its subsidiaries ("ST") reserve the right to make changes, corrections, enhancements, modifications, and improvements to ST products and/or to this document at any time without notice. Purchasers should obtain the latest relevant information on ST products before placing orders. ST products are sold pursuant to ST's terms and conditions of sale in place at the time of order acknowledgement.

Purchasers are solely responsible for the choice, selection, and use of ST products and ST assumes no liability for application assistance or the design of Purchasers' products.

No license, express or implied, to any intellectual property right is granted by ST herein.

Resale of ST products with provisions different from the information set forth herein shall void any warranty granted by ST for such product.

ST and the ST logo are trademarks of ST. All other product or service names are the property of their respective owners.

Information in this document supersedes and replaces information previously supplied in any prior versions of this document.

© 2016 STMicroelectronics – All rights reserved