Dual/Quad Rail-to-Rail Operational Amplifiers

OP295/OP495

FEATURES

Rail-to-rail output swing
Single-supply operation: 3 V to 36 V
Low offset voltage: 300 µV
Gain bandwidth product: 75 kHz
High open-loop gain: 1000 V/mV
Unity-gain stable
Low supply current/per amplifier: 150 µA maximum

APPLICATIONS

Battery-operated instrumentation
Servo amplifiers
Actuator drives
Sensor conditioners
Power supply control

GENERAL DESCRIPTION

Rail-to-rail output swing combined with dc accuracy are the key features of the OP495 quad and OP295 dual CBCMOS operational amplifiers. By using a bipolar front end, lower noise and higher accuracy than those of CMOS designs have been achieved. Both input and output ranges include the negative supply, providing the user with zero-in/zero-out capability. For users of 3.3 V systems such as lithium batteries, the OP295/OP495 are specified for 3 V operation.

Maximum offset voltage is specified at 300 µV for 5 V operation, and the open-loop gain is a minimum of 1000 V/mV. This yields performance that can be used to implement high accuracy systems, even in single-supply designs.

The ability to swing rail-to-rail and supply 15 mA to the load makes the OP295/OP495 ideal drivers for power transistors and H bridges. This allows designs to achieve higher efficiencies and to transfer more power to the load than previously possible without the use of discrete components.

For applications such as transformers that require driving inductive loads, increases in efficiency are also possible. Stability while driving capacitive loads is another benefit of this design over CMOS rail-to-rail amplifiers. This is useful for driving coax cable or large FET transistors. The OP295/OP495 are stable with loads in excess of 300 pF.

PIN CONFIGURATIONS

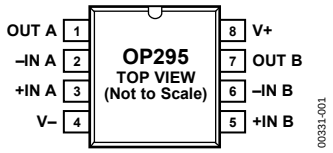

Figure 1. 8-Lead Narrow-Body SOIC_N S Suffix (R-8)

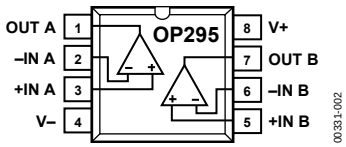

Figure 2. 8-Lead PDIP P Suffix (N-8)

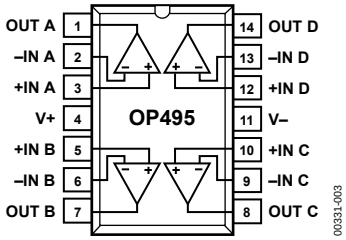

Figure 3. 14-Lead PDIP P Suffix (N-14)

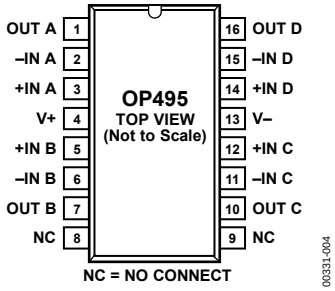

Figure 4. 16-Lead SOIC_W S Suffix (RW-16)

The OP295 and OP495 are specified over the extended industrial (−40°C to +125°C) temperature range. The OP295 is available in 8-lead PDIP and 8-lead SOIC_N surface-mount packages. The OP495 is available in 14-lead PDIP and 16-lead SOIC_W surface-mount packages.

Rev. G
Information furnished by Analog Devices is believed to be accurate and reliable. However, no responsibility is assumed by Analog Devices for its use, nor for any infringements of patents or other rights of third parties that may result from its use. Specifications subject to change without notice. No license is granted by implication or otherwise under any patent or patent rights of Analog Devices. Trademarks and registered trademarks are the property of their respective owners.

One Technology Way, P.O. Box 9106, Norwood, MA 02062-9106, U.S.A.
Tel: 781.329.4700 **www.analog.com**
Fax: 781.461.3113
©2009 Analog Devices, Inc. All rights reserved.

TABLE OF CONTENTS

Features ... 1
Applications ... 1
General Description ... 1
Pin Configurations ... 1
Revision History ... 2
Specifications ... 3
  Electrical Characteristics ... 3
Absolute Maximum Ratings ... 5
  Thermal Resistance ... 5
  ESD Caution ... 5
Typical Performance Characteristics ... 6
Applications ... 9
  Rail-to-Rail Application Information ... 9
  Low Drop-Out Reference ... 9
  Low Noise, Single-Supply Preamplifier ... 9
  Driving Heavy Loads ... 10
  Direct Access Arrangement ... 10
  Single-Supply Instrumentation Amplifier ... 10
  Single-Supply RTD Thermometer Amplifier ... 11
  Cold Junction Compensated, Battery-Powered Thermocouple Amplifier ... 11
  5 V Only, 12-Bit DAC That Swings 0 V to 4.095 V ... 11
  4 mA to 20 mA Current-Loop Transmitter ... 12
  3 V Low Dropout Linear Voltage Regulator ... 12
  Low Dropout, 500 mA Voltage Regulator with Foldback Current Limiting ... 12
  Square Wave Oscillator ... 13
  Single-Supply Differential Speaker Driver ... 13
  High Accuracy, Single-Supply, Low Power Comparator ... 13
Outline Dimensions ... 14
  Ordering Guide ... 16

REVISION HISTORY

8/09—Rev. F to Rev. G
Added Figure 18 ... 8
Updated Outline Dimensions ... 17

3/08—Rev. E to Rev. F
Changes to Offset Voltage Unit in Table 1 ... 3
Updated Outline Dimensions ... 14
Changes to Ordering Guide ... 16

5/06—Rev. D to Rev. E
Updated Format ... Universal
Changes to Features ... 1
Changes to Pin Connections ... 1
Updated Outline Dimensions ... 14
Changes to Ordering Guide ... 15

2/04—Rev. C to Rev. D
Changes to General Description ... 1
Changes to Specifications ... 2
Changes to Absolute Maximum Ratings ... 4
Changes to Ordering Guide ... 4
Updated Outline Dimensions ... 12

3/02—Rev. B to Rev. C
Figure changes to Pin Connections ... 1
Deleted OP295GBC and OP495GBC from Ordering Guide ... 3
Deleted Wafer Test Limits Table ... 3
Changes to Absolute Maximum Ratings ... 4
Deleted Dice Characteristics ... 4

SPECIFICATIONS

ELECTRICAL CHARACTERISTICS

V_S = 5.0 V, V_{CM} = 2.5 V, T_A = 25°C, unless otherwise noted.

Table 1.

Parameter	Symbol	Conditions	Min	Typ	Max	Unit
INPUT CHARACTERISTICS						
Offset Voltage	V_{OS}			30	300	µV
		−40°C ≤ T_A ≤ +125°C			800	µV
Input Bias Current	I_B			8	20	nA
		−40°C ≤ T_A ≤ +125°C			30	nA
Input Offset Current	I_{OS}			±1	±3	nA
		−40°C ≤ T_A ≤ +125°C			±5	nA
Input Voltage Range	V_{CM}		0		4.0	V
Common-Mode Rejection Ratio	CMRR	0 V ≤ V_{CM} ≤ 4.0 V, −40°C ≤ T_A ≤ +125°C	90	110		dB
Large Signal Voltage Gain	A_{VO}	R_L = 10 kΩ, 0.005 ≤ V_{OUT} ≤ 4.0 V	1000	10,000		V/mV
		R_L = 10 kΩ, −40°C ≤ T_A ≤ +125°C	500			V/mV
Offset Voltage Drift	$\Delta V_{OS}/\Delta T$			1	5	µV/°C
OUTPUT CHARACTERISTICS						
Output Voltage Swing High	V_{OH}	R_L = 100 kΩ to GND	4.98	5.0		V
		R_L = 10 kΩ to GND	4.90	4.94		V
		I_{OUT} = 1 mA, −40°C ≤ T_A ≤ +125°C		4.7		V
Output Voltage Swing Low	V_{OL}	R_L = 100 kΩ to GND		0.7	2	mV
		R_L = 10 kΩ to GND		0.7	2	mV
		I_{OUT} = 1 mA, −40°C ≤ T_A ≤ +125°C		90		mV
Output Current	I_{OUT}		±11	±18		mA
POWER SUPPLY						
Power Supply Rejection Ratio	PSRR	±1.5 V ≤ V_S ≤ ±15 V	90	110		dB
		±1.5 V ≤ V_S ≤ ±15 V, −40°C ≤ T_A ≤ +125°C	85			dB
Supply Current per Amplifier	I_{SY}	V_{OUT} = 2.5 V, R_L = ∞, −40°C ≤ T_A ≤ +125°C			150	µA
DYNAMIC PERFORMANCE						
Slew Rate	SR	R_L = 10 kΩ		0.03		V/µs
Gain Bandwidth Product	GBP			75		kHz
Phase Margin	θ_O			86		Degrees
NOISE PERFORMANCE						
Voltage Noise	e_n p-p	0.1 Hz to 10 Hz		1.5		µV p-p
Voltage Noise Density	e_n	f = 1 kHz		51		nV/√Hz
Current Noise Density	i_n	f = 1 kHz		<0.1		pA/√Hz

V_S = 3.0 V, V_{CM} = 1.5 V, T_A = 25°C, unless otherwise noted.

Table 2.

Parameter	Symbol	Conditions	Min	Typ	Max	Unit
INPUT CHARACTERISTICS						
Offset Voltage	V_{OS}			100	500	µV
Input Bias Current	I_B			8	20	nA
Input Offset Current	I_{OS}			±1	±3	nA
Input Voltage Range	V_{CM}		0		2.0	V
Common-Mode Rejection Ration	CMRR	0 V ≤ V_{CM} ≤ 2.0 V, −40°C ≤ T_A ≤ +125°C	90	110		dB
Large Signal Voltage Gain	A_{VO}	R_L = 10 kΩ		750		V/mV
Offset Voltage Drift	$\Delta V_{OS}/\Delta T$			1		µV/°C

Parameter	Symbol	Conditions	Min	Typ	Max	Unit
OUTPUT CHARACTERISTICS						
Output Voltage Swing High	V_{OH}	R_L = 10 kΩ to GND	2.9			V
Output Voltage Swing Low	V_{OL}	R_L = 10 kΩ to GND		0.7	2	mV
POWER SUPPLY						
Power Supply Rejection Ratio	PSRR	±1.5 V ≤ V_S ≤ ±15 V	90	110		dB
		±1.5 V ≤ V_S ≤ ±15 V, −40°C ≤ T_A ≤ +125°C	85			dB
Supply Current per Amplifier	I_{SY}	V_{OUT} = 1.5 V, R_L = ∞, −40°C ≤ T_A ≤ +125°C			150	µA
DYNAMIC PERFORMANCE						
Slew Rate	SR	R_L = 10 kΩ		0.03		V/µs
Gain Bandwidth Product	GBP			75		kHz
Phase Margin	θ_O			85		Degrees
NOISE PERFORMANCE						
Voltage Noise	e_n p-p	0.1 Hz to 10 Hz		1.6		µV p-p
Voltage Noise Density	e_n	f = 1 kHz		53		nV/√Hz
Current Noise Density	i_n	f = 1 kHz		<0.1		pA/√Hz

V_S = ±15.0 V, T_A = 25°C, unless otherwise noted.

Table 3.

Parameter	Symbol	Conditions	Min	Typ	Max	Unit
INPUT CHARACTERISTICS						
Offset Voltage	V_{OS}			300	500	µV
		−40°C ≤ T_A ≤ +125°C			800	µV
Input Bias Current	I_B	V_{CM} = 0 V		7	20	nA
		V_{CM} = 0 V, −40°C ≤ T_A ≤ +125°C			30	nA
Input Offset Current	I_{OS}	V_{CM} = 0 V		±1	±3	nA
		V_{CM} = 0 V, −40°C ≤ T_A ≤ +125°C			±5	nA
Input Voltage Range	V_{CM}		−15		+13.5	V
Common-Mode Rejection Ratio	CMRR	−15.0 V ≤ V_{CM} ≤ +13.5 V, −40°C ≤ T_A ≤ +125°C	90	110		dB
Large Signal Voltage Gain	A_{VO}	R_L = 10 kΩ	1000	4000		V/mV
Offset Voltage Drift	$\Delta V_{OS}/\Delta T$			1		µV/°C
OUTPUT CHARACTERISTICS						
Output Voltage Swing High	V_{OH}	R_L = 100 kΩ to GND	14.95			V
		R_L = 10 kΩ to GND	14.80			V
Output Voltage Swing Low	V_{OL}	R_L = 100 kΩ to GND			−14.95	V
		R_L = 10 kΩ to GND			−14.85	V
Output Current	I_{OUT}		±15	±25		mA
POWER SUPPLY						
Power Supply Rejection Ratio	PSRR	V_S = ±1.5 V to ±15 V	90	110		dB
		V_S = ±1.5 V to ±15 V, −40°C ≤ T_A ≤ +125°C	85			dB
Supply Current per Amplifier	I_{SY}	V_O = 0 V, R_L = ∞, V_S = ±18 V, −40°C ≤ T_A ≤ +125°C			175	µA
Supply Voltage Range	V_S		3 (± 1.5)		36 (± 18)	V
DYNAMIC PERFORMANCE						
Slew Rate	SR	R_L = 10 kΩ		0.03		V/µs
Gain Bandwidth Product	GBP			85		kHz
Phase Margin	θ_O			83		Degrees
NOISE PERFORMANCE						
Voltage Noise	e_n p-p	0.1 Hz to 10 Hz		1.25		µV p-p
Voltage Noise Density	e_n	f = 1 kHz		45		nV/√Hz
Current Noise Density	i_n	f = 1 kHz		<0.1		pA/√Hz

ABSOLUTE MAXIMUM RATINGS

Table 4.

Parameter[1]	Rating
Supply Voltage	±18 V
Input Voltage	±18 V
Differential Input Voltage[2]	36 V
Output Short-Circuit Duration	Indefinite
Storage Temperature Range	
P, S Packages	−65°C to +150°C
Operating Temperature Range	
OP295G, OP495G	−40°C to +125°C
Junction Temperature Range	
P, S Packages	−65°C to +150°C
Lead Temperature (Soldering, 60 sec)	300°C

[1] Absolute maximum ratings apply to packaged parts, unless otherwise noted.
[2] For supply voltages less than ±18 V, the absolute maximum input voltage is equal to the supply voltage.

Stresses above those listed under Absolute Maximum Ratings may cause permanent damage to the device. This is a stress rating only; functional operation of the device at these or any other conditions above those indicated in the operational section of this specification is not implied. Exposure to absolute maximum rating conditions for extended periods may affect device reliability.

THERMAL RESISTANCE

θ_{JA} is specified for worst case mounting conditions; that is, θ_{JA} is specified for device in socket for PDIP; θ_{JA} is specified for device soldered to printed circuit board for SOIC package.

Table 5. Thermal Resistance

Package Type	θ_{JA}	θ_{JC}	Unit
8-Lead PDIP (N-8)	103	43	°C/W
8-Lead SOIC_N (R-8)	158	43	°C/W
14-Lead PDIP (N-14)	83	39	°C/W
16-Lead SOIC_W (RW-16)	98	30	°C/W

ESD CAUTION

ESD (electrostatic discharge) sensitive device. Charged devices and circuit boards can discharge without detection. Although this product features patented or proprietary protection circuitry, damage may occur on devices subjected to high energy ESD. Therefore, proper ESD precautions should be taken to avoid performance degradation or loss of functionality.

TYPICAL PERFORMANCE CHARACTERISTICS

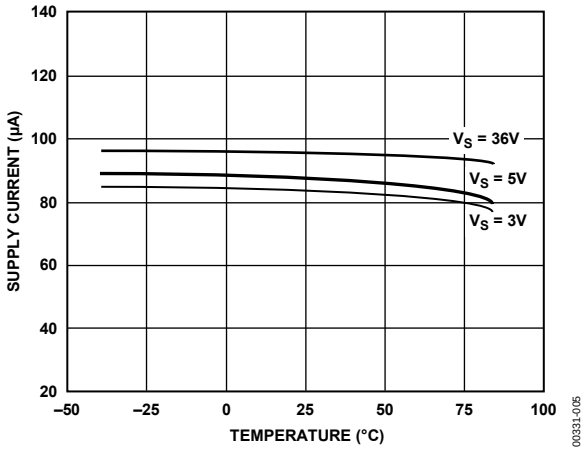

Figure 5. Supply Current Per Amplifier vs. Temperature

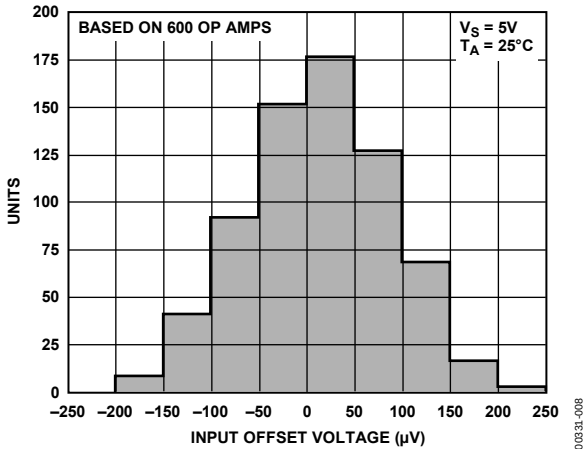

Figure 8. OP295 Input Offset (V_{OS}) Distribution

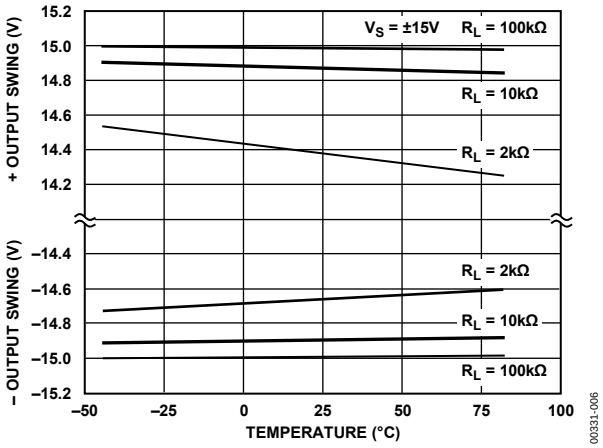

Figure 6. Output Voltage Swing vs. Temperature

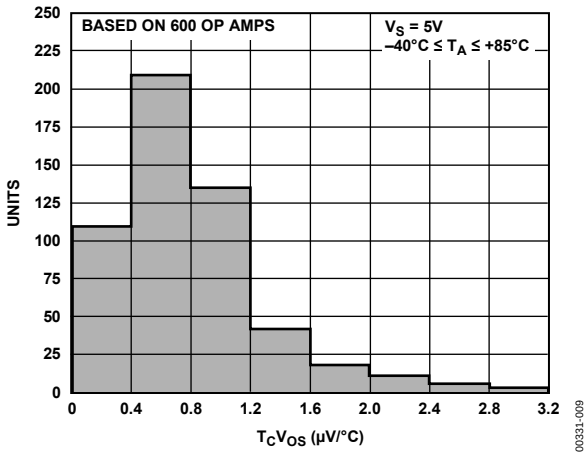

Figure 9. OP295 T_CV_{OS} Distribution

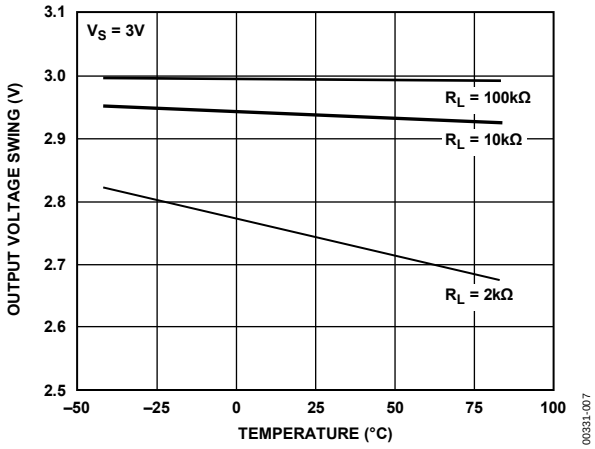

Figure 7. Output Voltage Swing vs. Temperature

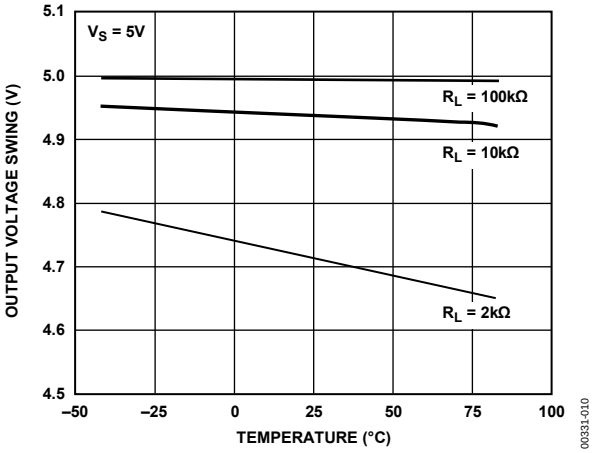

Figure 10. Output Voltage Swing vs. Temperature

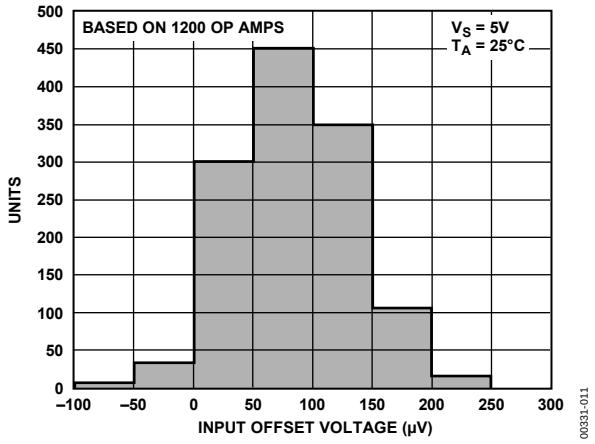

Figure 11. OP495 Input Offset (V_{OS}) Distribution

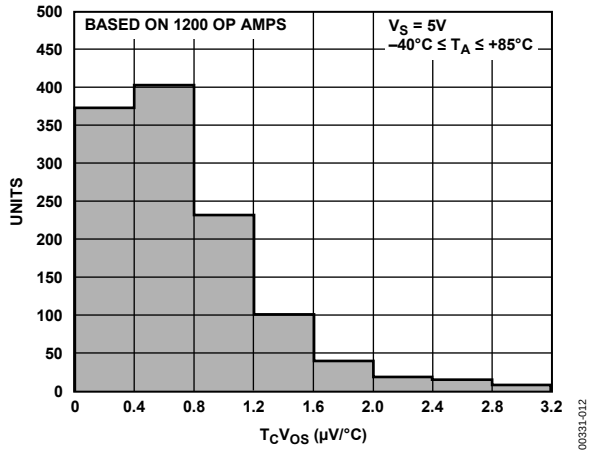

Figure 12. OP495 T_CV_{OS} Distribution

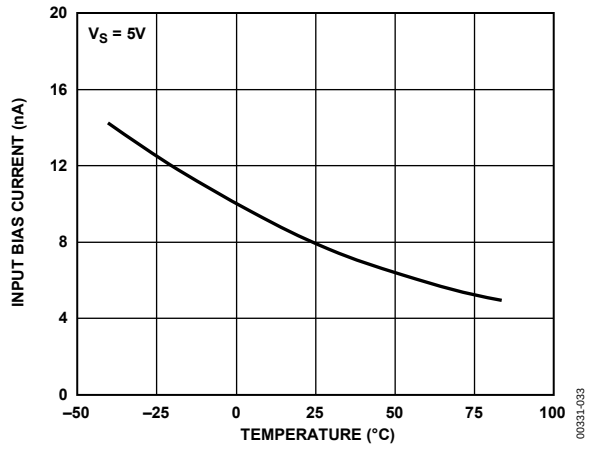

Figure 13. Input Bias Current vs. Temperature

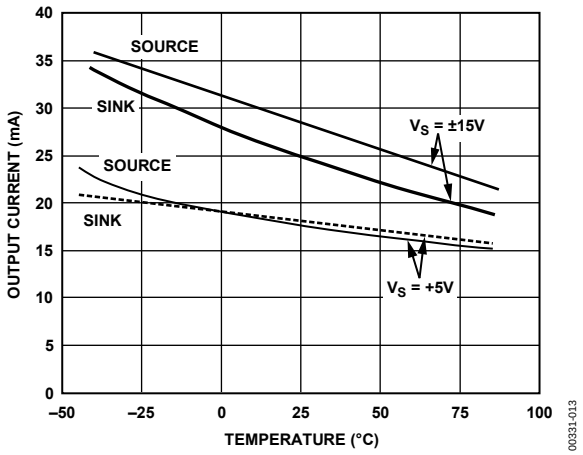

Figure 14. Output Current vs. Temperature

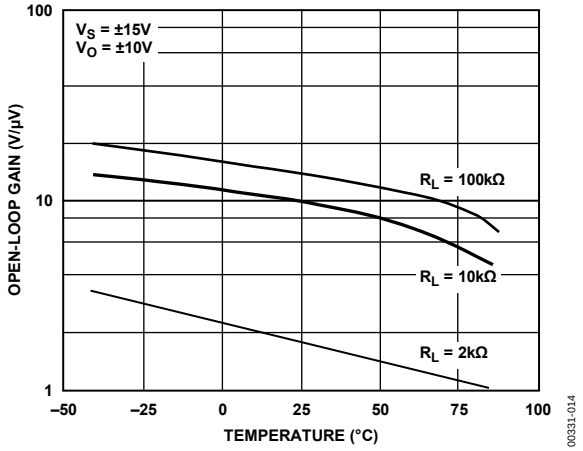

Figure 15. Open-Loop Gain vs. Temperature

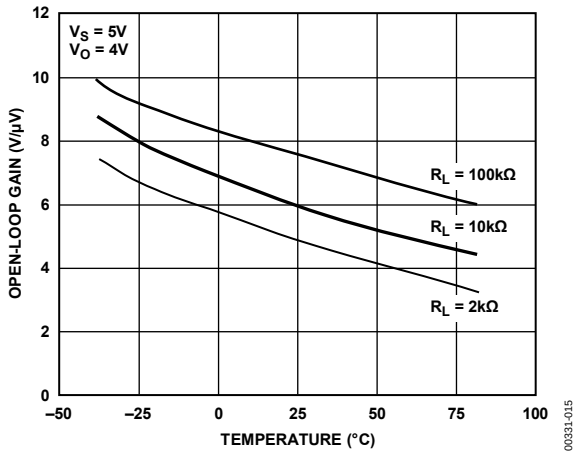

Figure 16. Open-Loop Gain vs. Temperature

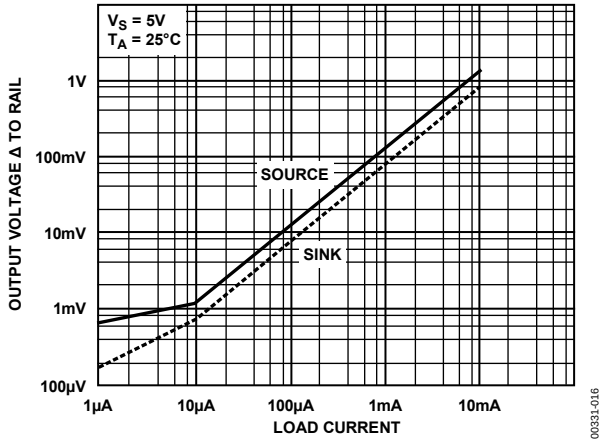

Figure 17. Output Voltage to Supply Rail vs. Load Current

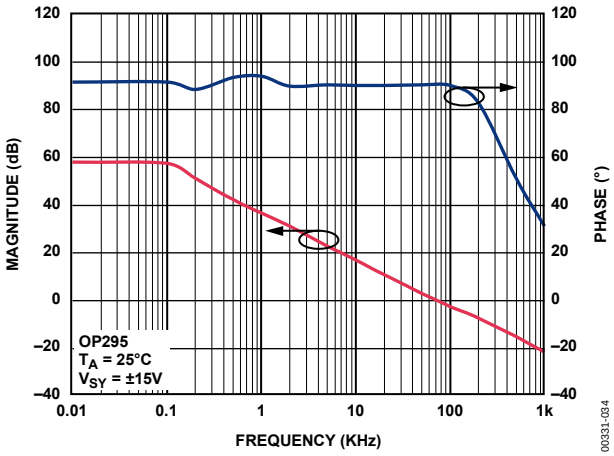

Figure 18. OP295 Gain and Phase vs. Frequency

APPLICATIONS

RAIL-TO-RAIL APPLICATION INFORMATION

The OP295/OP495 have a wide common-mode input range extending from ground to within about 800 mV of the positive supply. There is a tendency to use the OP295/OP495 in buffer applications where the input voltage could exceed the common-mode input range. This can initially appear to work because of the high input range and rail-to-rail output range. But above the common-mode input range, the amplifier is, of course, highly nonlinear. For this reason, there must be some minimal amount of gain when rail-to-rail output swing is desired. Based on the input common-mode range, this gain should be at least 1.2.

LOW DROP-OUT REFERENCE

The OP295/OP495 can be used to gain up a 2.5 V or other low voltage reference to 4.5 V for use with high resolution ADCs that operate from 5 V only supplies. The circuit in Figure 19 supplies up to 10 mA. Its no-load drop-out voltage is only 20 mV. This circuit supplies over 3.5 mA with a 5 V supply.

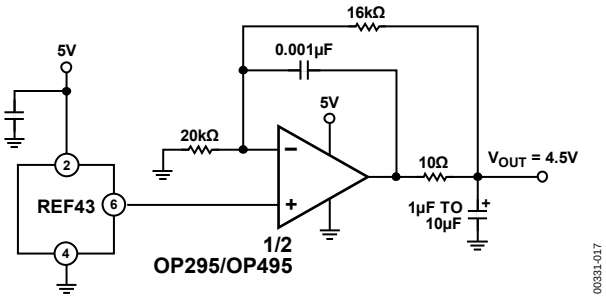

Figure 19. 4.5 V, Low Drop-Out Reference

LOW NOISE, SINGLE-SUPPLY PREAMPLIFIER

Most single-supply op amps are designed to draw low supply current at the expense of having higher voltage noise. This tradeoff may be necessary because the system must be powered by a battery. However, this condition is worsened because all circuit resistances tend to be higher; as a result, in addition to the op amp's voltage noise, Johnson noise (resistor thermal noise) is also a significant contributor to the total noise of the system.

The choice of monolithic op amps that combine the characteristics of low noise and single-supply operation is rather limited. Most single-supply op amps have noise on the order of 30 nV/√Hz to 60 nV/√Hz, and single-supply amplifiers with noise below 5 nV/√Hz do not exist.

To achieve both low noise and low supply voltage operation, discrete designs may provide the best solution. The circuit in Figure 20 uses the OP295/OP495 rail-to-rail amplifier and a matched PNP transistor pair—the MAT03—to achieve zero-in/zero-out single-supply operation with an input voltage noise of 3.1 nV/√Hz at 100 Hz.

R5 and R6 set the gain of 1000, making this circuit ideal for maximizing dynamic range when amplifying low level signals in single-supply applications. The OP295/OP495 provide rail-to-rail output swings, allowing this circuit to operate with 0 V to 5 V outputs. Only half of the OP295/OP495 is used, leaving the other uncommitted op amp for use elsewhere.

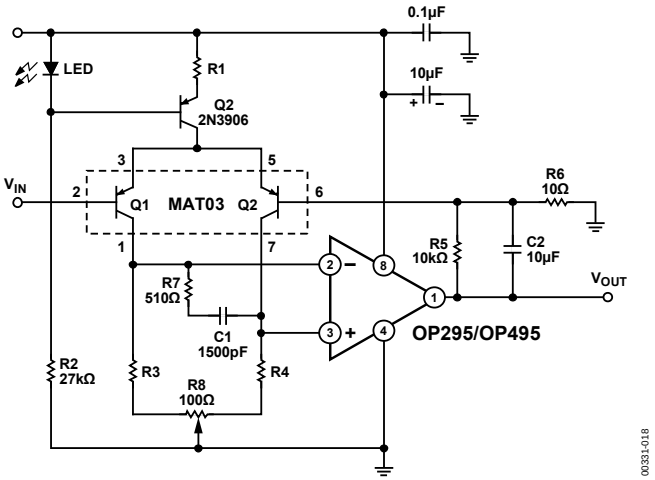

Figure 20. Low Noise Single-Supply Preamplifier

The input noise is controlled by the MAT03 transistor pair and the collector current level. Increasing the collector current reduces the voltage noise. This particular circuit was tested with 1.85 mA and 0.5 mA of current. Under these two cases, the input voltage noise was 3.1 nV/√Hz and 10 nV/√Hz, respectively. The high collector currents do lead to a tradeoff in supply current, bias current, and current noise. All of these parameters increase with increasing collector current. For example, typically the MAT03 has an h_{FE} = 165. This leads to bias currents of 11 µA and 3 µA, respectively.

Based on the high bias currents, this circuit is best suited for applications with low source impedance such as magnetic pickups or low impedance strain gauges. Furthermore, a high source impedance degrades the noise performance. For example, a 1 kΩ resistor generates 4 nV/√Hz of broadband noise, which is already greater than the noise of the preamp.

The collector current is set by R1 in combination with the LED and Q2. The LED is a 1.6 V Zener diode that has a temperature coefficient close to that of the Q2 base-emitter junction, which provides a constant 1.0 V drop across R1. With R1 equal to 270 Ω, the tail current is 3.7 mA and the collector current is half that, or 1.85 mA. The value of R1 can be altered to adjust the collector current. When R1 is changed, R3 and R4 should also be adjusted. To maintain a common-mode input range that includes ground, the collectors of the Q1 and Q2 should not go above 0.5 V; otherwise, they could saturate. Thus, R3 and R4 must be small enough to prevent this condition. Their values and the overall performance for two different values of R1 are summarized in Table 6.

Finally, the potentiometer, R8, is needed to adjust the offset voltage to null it to zero. Similar performance can be obtained using an OP90 as the output amplifier with a savings of about 185 µA of supply current. However, the output swing does not include the positive rail, and the bandwidth reduces to approximately 250 Hz.

Table 6. Single-Supply Low Noise Preamp Performance

	I_C = 1.85 mA	I_C = 0.5 mA
R1	270 Ω	1.0 kΩ
R3, R4	200 Ω	910 Ω
e_n @ 100 Hz	3.15 nV/√Hz	8.6 nV/√Hz
e_n @ 10 Hz	4.2 nV/√Hz	10.2 nV/√Hz
I_{SY}	4.0 mA	1.3 mA
I_B	11 µA	3 µA
Bandwidth	1 kHz	1 kHz
Closed-Loop Gain	1000	1000

DRIVING HEAVY LOADS

The OP295/OP495 are well suited to drive loads by using a power transistor, Darlington, or FET to increase the current to the load. The ability to swing to either rail can assure that the device is turned on hard. This results in more power to the load and an increase in efficiency over using standard op amps with their limited output swing. Driving power FETs is also possible with the OP295/OP495 because of their ability to drive capacitive loads of several hundred picofarads without oscillating.

Without the addition of external transistors, the OP295/OP495 can drive loads in excess of ±15 mA with ±15 V or +30 V supplies. This drive capability is somewhat decreased at lower supply voltages. At ±5 V supplies, the drive current is ±11 mA.

Driving motors or actuators in two directions in a single-supply application is often accomplished using an H bridge. The principle is demonstrated in Figure 21. From a single 5 V supply, this driver is capable of driving loads from 0.8 V to 4.2 V in both directions. Figure 22 shows the voltages at the inverting and noninverting outputs of the driver. There is a small crossover glitch that is frequency-dependent; it does not cause problems unless used in low distortion applications, such as audio. If this is used to drive inductive loads, diode clamps should be added to protect the bridge from inductive kickback.

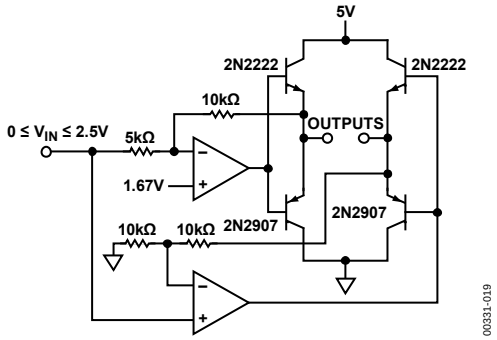

Figure 21. H Bridge

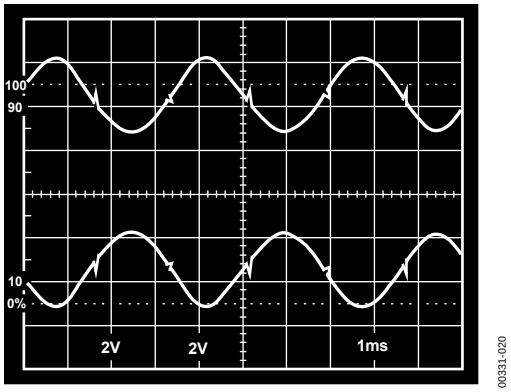

Figure 22. H Bridge Outputs

DIRECT ACCESS ARRANGEMENT

The OP295/OP495 can be used in a single-supply direct access arrangement (DAA), as shown in Figure 23. This figure shows a portion of a typical DM capable of operating from a single 5 V supply, and it may also work on 3 V supplies with minor modifications. Amplifier A2 and Amplifier A3 are configured so that the transmit signal, TxA, is inverted by A2 and is not inverted by A3. This arrangement drives the transformer differentially so the drive to the transformer is effectively doubled over a single amplifier arrangement. This application takes advantage of the ability of the OP295/OP495 to drive capacitive loads and to save power in single-supply applications.

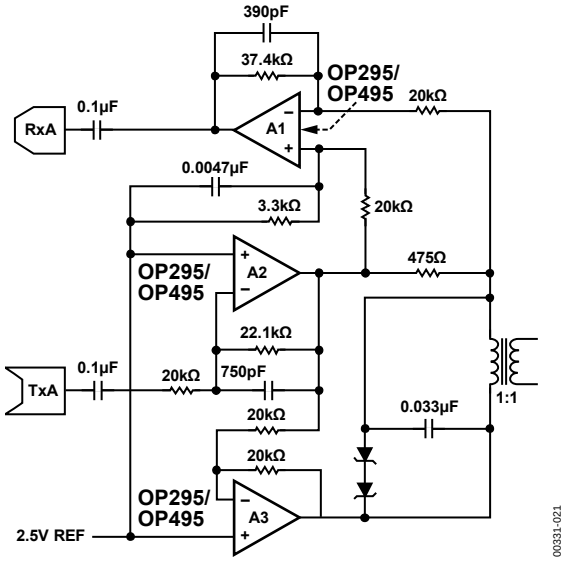

Figure 23. Direct Access Arrangement

SINGLE-SUPPLY INSTRUMENTATION AMPLIFIER

The OP295/OP495 can be configured as a single-supply instrumentation amplifier, as shown in Figure 24. For this example, V_{REF} is set equal to V+/2, and V_O is measured with respect to V_{REF}. The input common-mode voltage range includes ground, and the output swings to both rails.

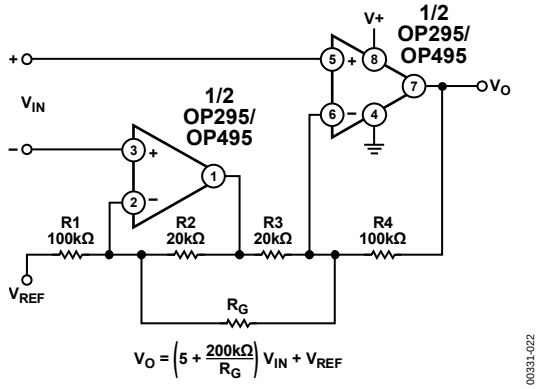

Figure 24. Single-Supply Instrumentation Amplifier

Resistor R_G sets the gain of the instrumentation amplifier. Minimum gain is 6 (with no R_G). All resistors should be matched in absolute value as well as temperature coefficient to maximize common-mode rejection performance and minimize drift. This instrumentation amplifier can operate from a supply voltage as low as 3 V.

SINGLE-SUPPLY RTD THERMOMETER AMPLIFIER

This RTD amplifier takes advantage of the rail-to-rail swing of the OP295/OP495 to achieve a high bridge voltage in spite of a low 5 V supply. The OP295/OP495 amplifier servos a constant 200 µA current to the bridge. The return current drops across the parallel resistors 6.19 kΩ and 2.55 MΩ, developing a voltage that is servoed to 1.235 V, which is established by the AD589 band gap reference. The 3-wire RTD provides an equal line resistance drop in both 100 Ω legs of the bridge, thus improving the accuracy.

The AMP04 amplifies the differential bridge signal and converts it to a single-ended output. The gain is set by the series resistance of the 332 Ω resistor plus the 50 Ω potentiometer. The gain scales the output to produce a 4.5 V full scale. The 0.22 µF capacitor to the output provides a 7 Hz low-pass filter to keep noise at a minimum.

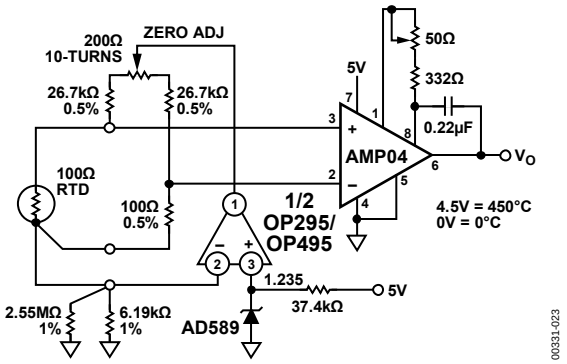

Figure 25. Low Power RTD Amplifier

COLD JUNCTION COMPENSATED, BATTERY-POWERED THERMOCOUPLE AMPLIFIER

The 150 µA quiescent current per amplifier consumption of the OP295/OP495 makes them useful for battery-powered temperature measuring instruments. The K-type thermocouple terminates into an isothermal block where the terminated junctions' ambient temperatures can be continuously monitored and corrected by summing an equal but opposite thermal EMF to the amplifier, thereby canceling the error introduced by the cold junctions.

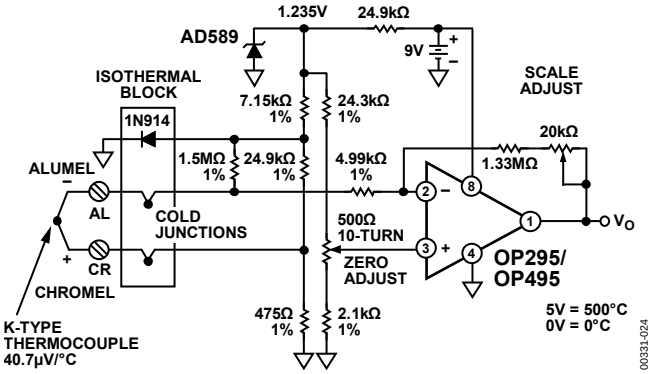

Figure 26. Battery-Powered, Cold-Junction Compensated Thermocouple Amplifier

To calibrate, immerse the thermocouple measuring junction in a 0°C ice bath and adjust the 500 Ω zero-adjust potentiometer to 0 V out. Then immerse the thermocouple in a 250°C temperature bath or oven and adjust the scale-adjust potentiometer for an output voltage of 2.50 V, which is equivalent to 250°C. Within this temperature range, the K-type thermocouple is quite accurate and produces a fairly linear transfer characteristic. Accuracy of ±3°C is achievable without linearization.

Even if the battery voltage is allowed to decay to as low as 7 V, the rail-to-rail swing allows temperature measurements to 700°C. However, linearization may be necessary for temperatures above 250°C, where the thermocouple becomes rather nonlinear. The circuit draws just under 500 µA supply current from a 9 V battery.

5 V ONLY, 12-BIT DAC THAT SWINGS 0 V TO 4.095 V

Figure 27 shows a complete voltage output DAC with wide output voltage swing operating off a single 5 V supply. The serial input, 12-bit DAC is configured as a voltage output device with the 1.235 V reference feeding the current output pin (I_{OUT}) of the DAC. The V_{REF}, which is normally the input, now becomes the output.

The output voltage from the DAC is the binary weighted voltage of the reference, which is gained up by the output amplifier such that the DAC has a 1 mV per bit transfer function.

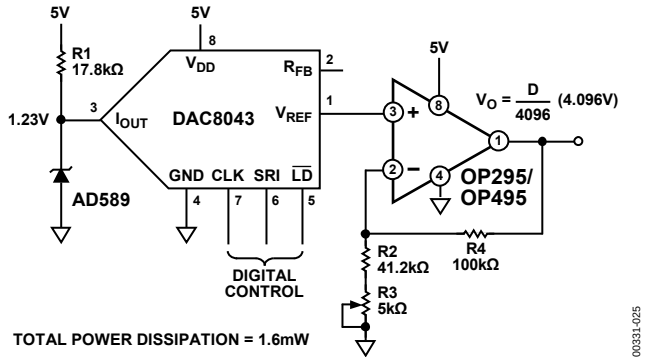

Figure 27. A 5 V 12-Bit DAC with 0 V to 4.095 V Output Swing

4 mA TO 20 mA CURRENT-LOOP TRANSMITTER

Figure 28 shows a self-powered 4 mA to 20 mA current-loop transmitter. The entire circuit floats up from the single-supply (12 V to 36 V) return. The supply current carries the signal within the 4 mA to 20 mA range. Thus, the 4 mA establishes the baseline current budget within which the circuit must operate. This circuit consumes only 1.4 mA maximum quiescent current, making 2.6 mA of current available to power additional signal conditioning circuitry or to power a bridge circuit.

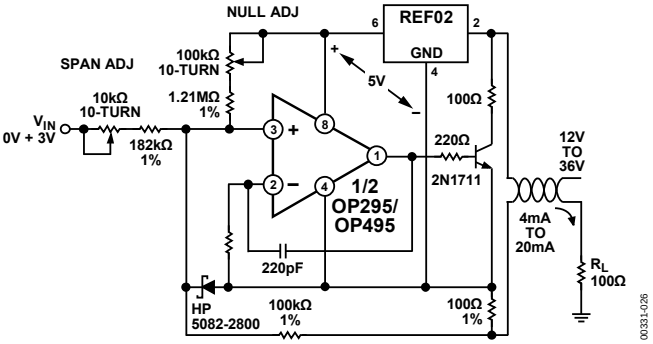

Figure 28. 4 mA to 20 mA Current Loop Transmitter

3 V LOW DROPOUT LINEAR VOLTAGE REGULATOR

Figure 29 shows a simple 3 V voltage regulator design. The regulator can deliver 50 mA load current while allowing a 0.2 V dropout voltage. The OP295/OP495 rail-to-rail output swing drives the MJE350 pass transistor without requiring special drive circuitry. At no load, its output can swing less than the pass transistor's base-emitter voltage, turning the device nearly off. At full load, and at low emitter-collector voltages, the transistor beta tends to decrease. The additional base current is easily handled by the OP295/OP495 output.

The amplifier servos the output to a constant voltage, which feeds a portion of the signal to the error amplifier.

Higher output current, to 100 mA, is achievable at a higher dropout voltage of 3.8 V.

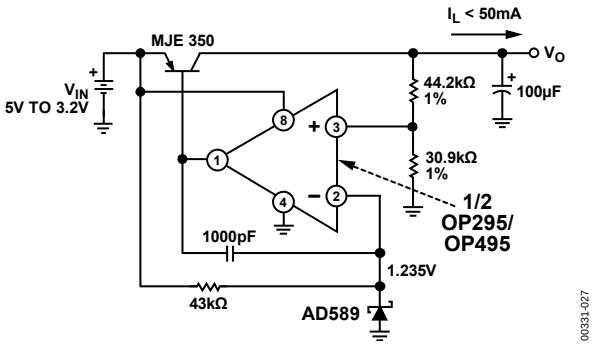

Figure 29. 3 V Low Dropout Voltage Regulator

Figure 30 shows the regulator's recovery characteristic when its output underwent a 20 mA to 50 mA step current change.

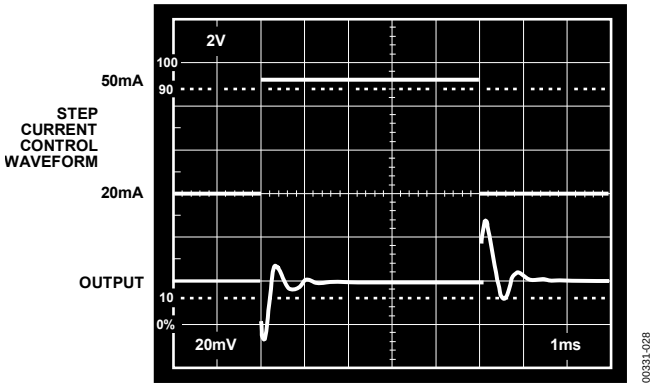

Figure 30. Output Step Load Current Recovery

LOW DROPOUT, 500 mA VOLTAGE REGULATOR WITH FOLDBACK CURRENT LIMITING

Adding a second amplifier in the regulation loop, as shown in Figure 31, provides an output current monitor as well as foldback current limiting protection.

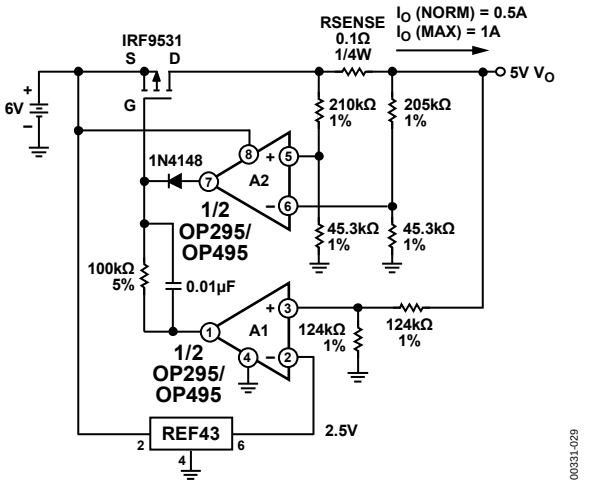

Figure 31. Low Dropout, 500 mA Voltage Regulator with Foldback Current Limiting

Amplifier A1 provides error amplification for the normal voltage regulation loop. As long as the output current is less than 1 A, the output of Amplifier A2 swings to ground, reverse-biasing the diode and effectively taking itself out of the circuit. However, as the output current exceeds 1 A, the voltage that develops across the 0.1 Ω sense resistor forces the output of Amplifier A2 to go high, forward-biasing the diode, which in turn closes the current-limit loop. At this point, the A2's lower output resistance dominates the drive to the power MOSFET transistor, thereby effectively removing the A1 voltage regulation loop from the circuit.

If the output current greater than 1 A persists, the current limit loop forces a reduction of current to the load, which causes a corresponding drop in output voltage. As the output voltage drops, the current-limit threshold also drops fractionally, resulting in a decreasing output current as the output voltage decreases, to the limit of less than 0.2 A at 1 V output. This fold-back effect reduces the power dissipation considerably during a short circuit condition, thus making the power supply far more forgiving in terms of the thermal design requirements. Small heat sinking on the power MOSFET can be tolerated.

The rail-to-rail swing of the OP295 exacts higher gate drive to the power MOSFET, providing a fuller enhancement to the transistor. The regulator exhibits 0.2 V dropout at 500 mA of load current. At 1 A output, the dropout voltage is typically 5.6 V.

SQUARE WAVE OSCILLATOR

The circuit in Figure 32 is a square wave oscillator (note the positive feedback). The rail-to-rail swing of the OP295/OP495 helps maintain a constant oscillation frequency even if the supply voltage varies considerably. Consider a battery-powered system where the voltages are not regulated and drop over time. The rail-to-rail swing ensures that the noninverting input sees the full V+/2, rather than only a fraction of it.

The constant frequency comes from the fact that the 58.7 kΩ feedback sets up Schmitt trigger threshold levels that are directly proportional to the supply voltage, as are the RC charge voltage levels. As a result, the RC charge time, and therefore, the frequency, remain constant, independent of supply voltage. The slew rate of the amplifier limits oscillation frequency to a maximum of about 800 Hz at a 5 V supply.

SINGLE-SUPPLY DIFFERENTIAL SPEAKER DRIVER

Connected as a differential speaker driver, the OP295/OP495 can deliver a minimum of 10 mA to the load. With a 600 Ω load, the OP295/OP495 can swing close to 5 V p-p across the load.

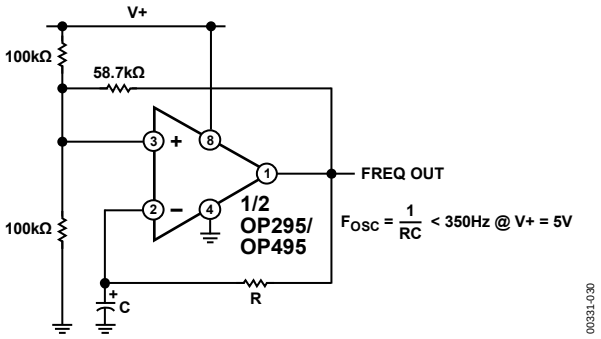

Figure 32. Square Wave Oscillator Has Stable Frequency Regardless of Supply Changes

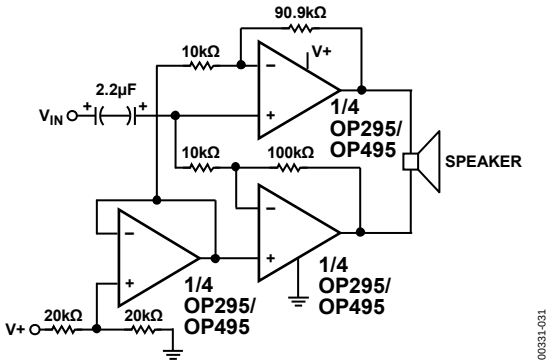

Figure 33. Single-Supply Differential Speaker Driver

HIGH ACCURACY, SINGLE-SUPPLY, LOW POWER COMPARATOR

The OP295/OP495 make accurate open-loop comparators. With a single 5 V supply, the offset error is less than 300 µV. Figure 34 shows the response time of the OP295/OP495 when operating open-loop with 4 mV overdrive. They exhibit a 4 ms response time at the rising edge and a 1.5 ms response time at the falling edge.

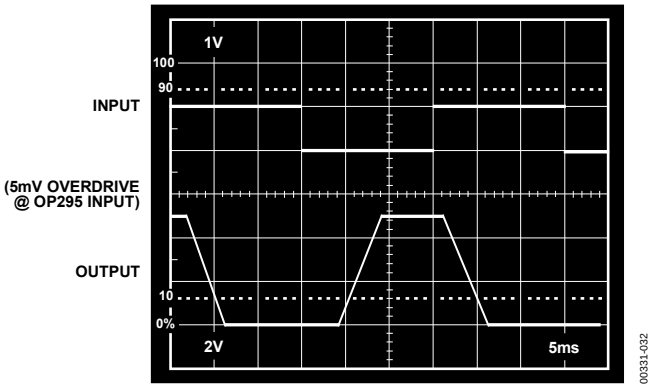

Figure 34. Open-Loop Comparator Response Time with 5 mV Overdrive

OUTLINE DIMENSIONS

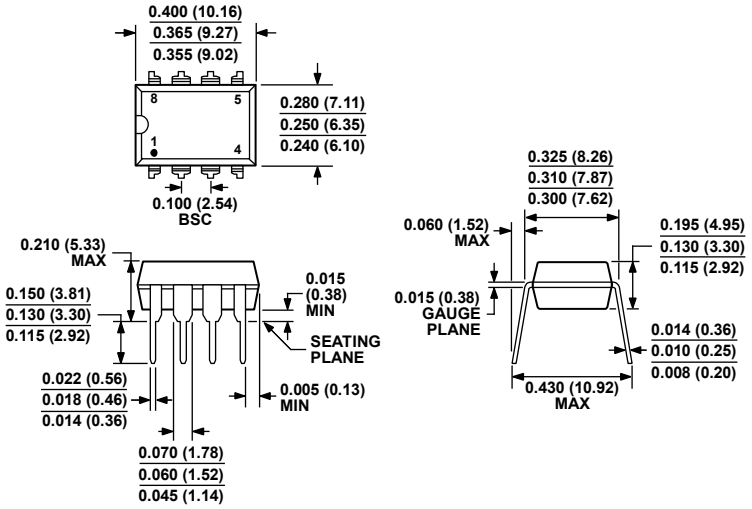

COMPLIANT TO JEDEC STANDARDS MS-001

CONTROLLING DIMENSIONS ARE IN INCHES; MILLIMETER DIMENSIONS (IN PARENTHESES) ARE ROUNDED-OFF INCH EQUIVALENTS FOR REFERENCE ONLY AND ARE NOT APPROPRIATE FOR USE IN DESIGN. CORNER LEADS MAY BE CONFIGURED AS WHOLE OR HALF LEADS.

070606-A

Figure 35. 8-Lead Plastic Dual In-Line Package [PDIP]
(N-8) P Suffix
Dimensions shown in inches and (millimeters)

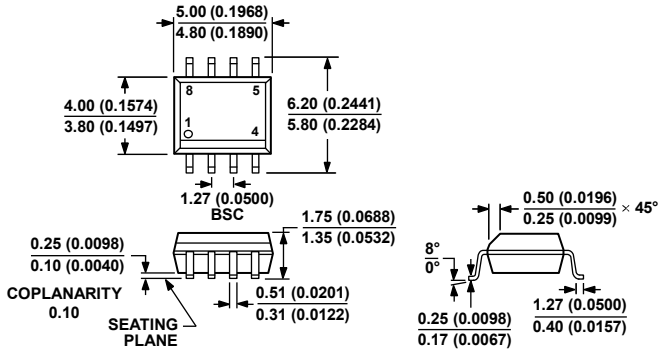

COMPLIANT TO JEDEC STANDARDS MS-012-AA

CONTROLLING DIMENSIONS ARE IN MILLIMETERS; INCH DIMENSIONS (IN PARENTHESES) ARE ROUNDED-OFF MILLIMETER EQUIVALENTS FOR REFERENCE ONLY AND ARE NOT APPROPRIATE FOR USE IN DESIGN.

012407-A

Figure 36. 8-Lead Standard Small Outline Package [SOIC_N]
Narrow Body (R-8) S Suffix
Dimensions shown in millimeters and (inches)

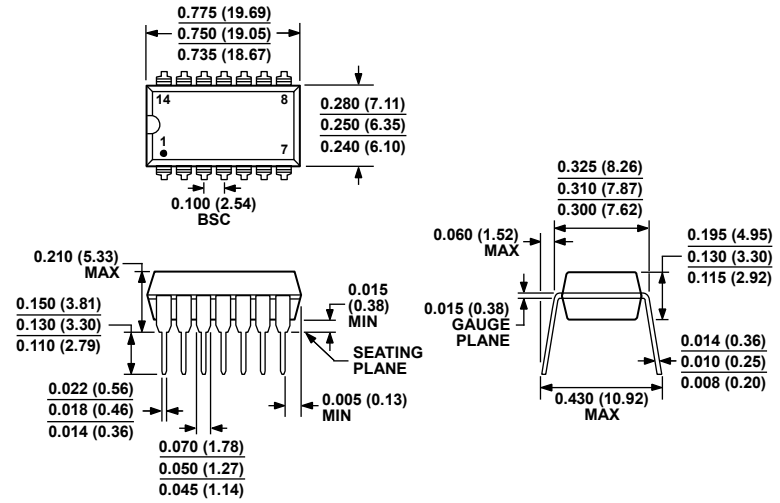

COMPLIANT TO JEDEC STANDARDS MS-001
CONTROLLING DIMENSIONS ARE IN INCHES; MILLIMETER DIMENSIONS (IN PARENTHESES) ARE ROUNDED-OFF INCH EQUIVALENTS FOR REFERENCE ONLY AND ARE NOT APPROPRIATE FOR USE IN DESIGN.
CORNER LEADS MAY BE CONFIGURED AS WHOLE OR HALF LEADS.

070606-A

Figure 37. 14-Lead Plastic Dual In-Line Package [PDIP]
(N-14) P Suffix
Dimensions shown in inches and (millimeters)

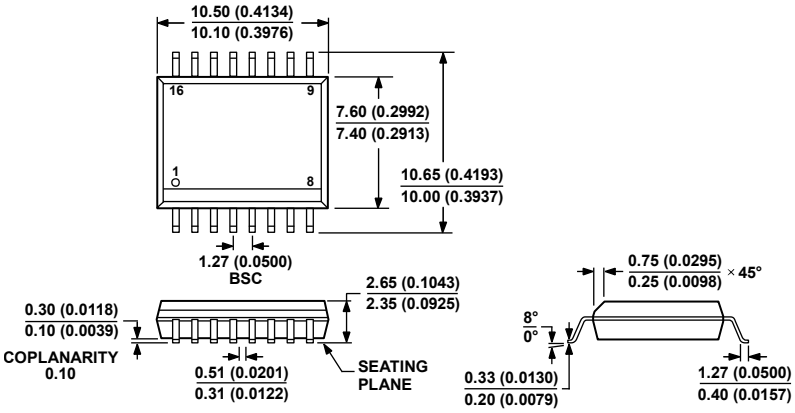

COMPLIANT TO JEDEC STANDARDS MS-013-AA
CONTROLLING DIMENSIONS ARE IN MILLIMETERS; INCH DIMENSIONS (IN PARENTHESES) ARE ROUNDED-OFF MILLIMETER EQUIVALENTS FOR REFERENCE ONLY AND ARE NOT APPROPRIATE FOR USE IN DESIGN.

032707-B

Figure 38. 16-Lead Standard Small Outline Package [SOIC_W]
Wide Body (RW-16) S Suffix
Dimensions shown in millimeters and (inches)

ORDERING GUIDE

Model	Temperature Range	Package Description	Package Option
OP295GP	−40°C to +125°C	8-Lead PDIP	P-Suffix (N-8)
OP295GPZ[1]	−40°C to +125°C	8-Lead PDIP	P-Suffix (N-8)
OP295GS	−40°C to +125°C	8-Lead SOIC_N	S-Suffix (R-8)
OP295GS-REEL	−40°C to +125°C	8-Lead SOIC_N	S-Suffix (R-8)
OP295GS-REEL7	−40°C to +125°C	8-Lead SOIC_N	S-Suffix (R-8)
OP295GSZ[1]	−40°C to +125°C	8-Lead SOIC_N	S-Suffix (R-8)
OP295GSZ-REEL[1]	−40°C to +125°C	8-Lead SOIC_N	S-Suffix (R-8)
OP295GSZ-REEL7[1]	−40°C to +125°C	8-Lead SOIC_N	S-Suffix (R-8)
OP495GP	−40°C to +125°C	14-Lead PDIP	P-Suffix (N-14)
OP495GPZ[1]	−40°C to +125°C	14-Lead PDIP	P-Suffix (N-14)
OP495GS	−40°C to +125°C	16-Lead SOIC_W	S-Suffix (RW-16)
OP495GS-REEL	−40°C to +125°C	16-Lead SOIC_W	S-Suffix (RW-16)
OP495GSZ[1]	−40°C to +125°C	16-Lead SOIC_W	S-Suffix (RW-16)
OP495GSZ-REEL[1]	−40°C to +125°C	16-Lead SOIC_W	S-Suffix (RW-16)

[1] Z = RoHS Compliant Part.

©2009 Analog Devices, Inc. All rights reserved. Trademarks and registered trademarks are the property of their respective owners.
D00331-0-8/09(G)