TH71101

315/433MHz

FSK/ASK Receiver

Features

- Single-conversion superhet architecture for low external component count
- FSK demodulation with phase-coincidence demodulator
- Low current consumption in active mode and very low standby current
- Switchable LNA gain for improved dynamic range
- RSSI allows signal strength indication and ASK detection
- 32-pin Low profile Quad Flat Package (LQFP)

Application Examples

- General digital data transmission
- Tire Pressure Monitoring Systems (TPMS)
- Remote Keyless Entry (RKE)
- Wireless access control
- Alarm and security systems
- Garage door openers
- Remote Controls
- Home and building automation
- Low-power telemetry systems

Pin Description

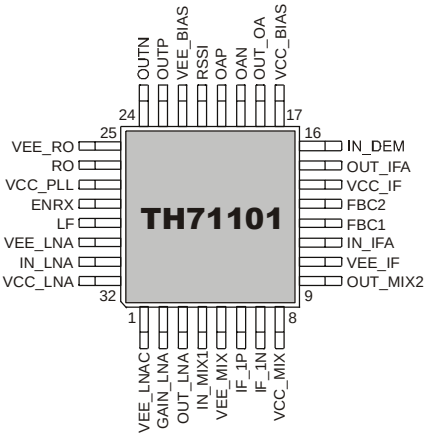

Ordering information

Product Code	Temperature Code	Package Code	Option Code	Packing Form Code
TH71101	**E**	NE	CAA-000	RE
TH71101	**E**	NE	CAA-000	TR

Legend:

Temperature Code: E for Temperature Range -40°C to 85°C
Package Code: NE for LQFP
Packing Form: RE for Reel, TR for Tray
Ordering example: TH71101ENE-CAA-000-RE

General Description

The TH71101 FSK/ASK single-conversion superheterodyne receiver IC is designed for applications in the European 433MHz industrial-scientific-medical (ISM) band, according to the EN 300 220 telecommunications standard. It can also be used for any other system with carrier frequencies ranging from 300MHz to 450MHz (e.g. for applications according to FCC part 15 and ARIB STD-T67).

Contents

1. Theory of Operation 3
1.1. General 3
1.2. Technical Data Overview 3
1.3. Block Diagram 4
1.4. Mode Configurations 4
1.5. LNA GAIN Control 4
1.6. Frequency Planning 4
1.6.1. Selected Frequency Plans 5
1.6.2. Maximum Frequency Coverage 5
2. Pin Definitions and Descriptions 6
3. Technical Data 9
3.1. Absolute Maximum Ratings 9
3.2. Normal Operating Conditions 9
3.3. Crystal Parameters 9
3.4. DC Characteristics 10
3.5. AC System Characteristics 11
4. Test Circuits 12
4.1. Standard FSK Reception 12
4.1.1. Standard FSK Application Circuit 12
4.1.2. Standard FSK Component List 13
4.2. Narrow Band FSK Reception 14
4.2.1. Narrow Band FSK Application Circuit 14
4.2.2. Narrow Band FSK Component List 15
4.3. ASK Reception 16
4.3.1. ASK Application Circuit 16
4.3.2. ASK Component List 17
5. Package Description 18
5.1. Soldering Information 18
6. Standard information regarding manufacturability of Melexis products with different soldering processes 19
7. ESD Precautions 19
8. Contact 20
9. Disclaimer 20

1. Theory of Operation

1.1. General

With the TH71101 receiver chip, various circuit configurations can be arranged in order to meet a number of different customer requirements. For FSK reception the IF tank used in the phase coincidence demodulator can be constituted by an external ceramic discriminator. In ASK configuration, the RSSI signal is fed to an ASK detector, which is constituted by the operational amplifier.

A double-conversion variant, called TH71102, is also available. This receiver IC allows a higher degree of image rejection, achieved in conjunction with an RF front-end filter. Both RXICs have the same die. At the TH71102, the second mixer (MIX2) is used to down-convert the first IF (IF1) to the second IF (IF2). At the TH71101, MIX2 operates as an amplifier.

Efficient RF front-end filtering is realized by using a SAW, ceramic or helix filter in front of the LNA and by adding an LC filter at the LNA output.

The TH71101 receiver IC consists of the following building blocks:

- PLL synthesizer (PLL SYNTH) for generation of the local oscillator signal LO, parts of the PLL SYNTH are: the high-frequency VCO1, the feedback divider DIV_16, a phase-frequency detector (PFD) with charge pump (CP) and a crystal-based reference oscillator (RO)
- Low-noise amplifier (LNA) for high-sensitivity RF signal reception
- First mixer (MIX1) for down-conversion of the RF signal to the IF
- IF pre amplifier which is a mixer cell (MIX2) that operates as an amplifier
- IF amplifier (IFA) to amplify and limit the IF signal and for RSSI generation
- Phase coincidence demodulator (DEMOD) with third mixer (MIX3) to demodulate the IF signal
- Operational amplifier (OA) for data slicing, filtering and ASK detection
- Bias circuitry for bandgap biasing and circuit shutdown

1.2. Technical Data Overview

- Input frequency range: 300to 450 MHz
- Power supply range: 2.3 to 5.5 V @ ASK
- Temperature range: -40 to +85 °C
- Standby current: 50 nA
- Operating current: 6.5 mA @ low gain
- 8.2 mA @ high gain
- Sensitivity: -113 dBm @ ASK 1)
- -107 dBm @ FSK 2)
- Maximum data rate: 260 kbps NRZ @ ASK
- 180 kbps NRZ @ FSK
- Range of IF: 400 kHz to 22 MHz
- Maximum input level: -10 dBm @ ASK
- 0 dBm @ FSK
- Image rejection: > 45 dB (e.g. with 433.92 MHz SAW front-end filter and at 10.7 MHz IF)
- Spurious emission: < -70 dBm
- Input frequency acceptance range: up to ±100 kHz
- RSSI range: 70 dB
- FSK deviation range: ±2.5 kHz to ±80 kHz

1) at 4 kbps NRZ, BER = $3 \cdot 10^{-3}$, 180 kHz IF filter BW, without SAW front-end-filter loss
2) at 4 kbps NRZ, BER = $3 \cdot 10^{-3}$, ± 20 kHz FSK deviation, 180 kHz IF filter BW, without SAW front-end-filter loss

1.3. Block Diagram

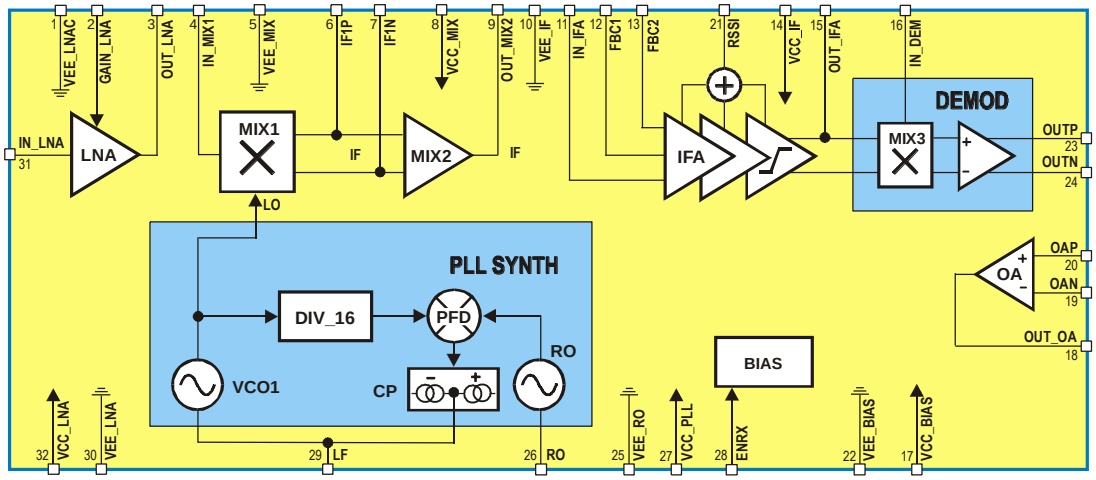

Fig. 1: TH71101 block diagram

1.4. Mode Configurations

ENRX	Mode	Description
0	RX standby	RX disabled
1	RX active	RX enable

Note: *ENRX are pulled down internally*

1.5. LNA GAIN Control

V_{GAIN_LNA}	Mode	Description
< 0.8 V	HIGH GAIN	LNA set to high gain
> 1.4 V	LOW GAIN	LNA set to low gain

Note: *hysteresis between gain modes to ensure stability*

1.6. Frequency Planning

Frequency planning is straightforward for single-conversion applications because there is only one IF that can be chosen, and then the only possible choice is low-side or high-side injection of the LO signal (which is now the one and only LO signal in the receiver).

The receiver's single-conversion architecture requires careful frequency planning. Besides the desired RF input signal, there are a number of spurious signals that may cause an undesired response at the output. Among them is the image of the RF signal that must be suppressed by the RF front-end filter.

By using the internal PLL synthesizer of the TH71101 with the fixed feedback divider ratio of N = 16 (DIV_16), two types of down-conversion are possible: low-side injection of LO and high-side injection of LO. The following table summarizes some equations that are useful to calculate the crystal reference frequency (REF) and the LO frequency, for a given RF and IF.

Injection type	low	high
REF	(RF – IF)/16	(RF + IF)/16
LO	16 • REF	16 • REF
IF	RF – LO	LO – RF
RF image	RF – 2IF	RF + 2IF

1.6.1. Selected Frequency Plans

The following table depicts crystal, LO and image signals considering the examples of 315 MHz and 433.92 MHz RF reception at IF = 10.7 MHz.

Signal type	RF = 315 MHz	RF = 315 MHz	RF = 433.92 MHz	RF = 433.92 MHz
Injection type	low	**high**	**low**	high
REF / MHz	19.01875	**20.35625**	**26.45125**	27.78875
LO / MHz	304.3	**325.7**	**423.22**	444.62
RF image / MHz	293.6	**336.4**	**412.52**	455.32

The selection of the reference crystal frequency is based on some assumptions. As for example: the image frequency should not be in a radio band where strong interfering signals might occur (because they could represent parasitic receiving signals), the LO signal should be in the range of 300 MHz to 450 MHz (because this is the optimum frequency range of the VCO1). Furthermore the IF should be as high as possible to achieve highest RF image rejection. The columns in bold depict the selected frequency plans to receive at 315 MHz and 433.92 MHz, respectively.

1.6.2. Maximum Frequency Coverage

Parameter	f_{min}	f_{max}
Injection type	high	low
RF / MHz	289.3	460.7
REF / MHz	18.75	28.125
LO / MHz	300	450
IF/ MHz	10.7	10.7

2. Pin Definitions and Descriptions

Pin No.	Name	I/O Type	Functional Schematic	Description
3	OUT_LNA	analog output	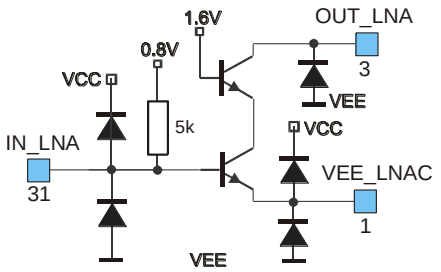	LNA open-collector output, to be connected to external LC tank that resonates at RF
31	IN_LNA	analog input		LNA input, approx. 26Ω single-ended
1	VEE_LNAC	ground		ground of LNA core (cascode)
2	GAIN_LNA	analog input	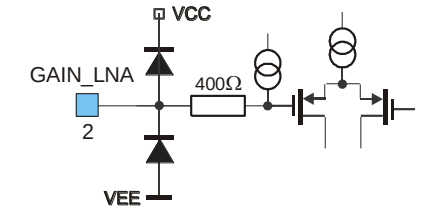	LNA gain control (input with hysteresis) RX standby: no pull-up RX active: pull-up
4	IN_MIX1	analog input	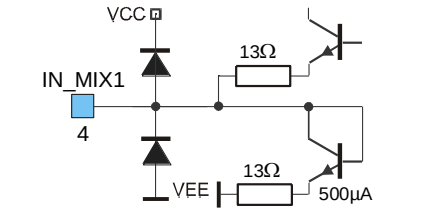	MIX1 input, approx. 33Ω single-ended
5	VEE_MIX	ground		ground of MIX1 and MIX2
6	IF1P	analog I/O	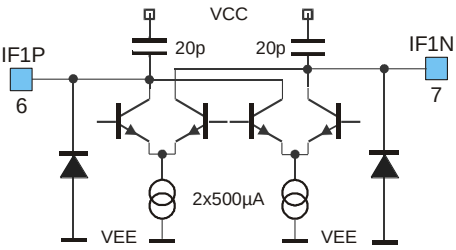	open-collector output, to be connected to external LC tank that resonates at first IF
7	IF1N	analog I/O		open-collector output, to be connected to external LC tank that resonates at first IF
8	VCC_MIX	supply		positive supply of MIX1 and MIX2
9	OUT_MIX2	analog output	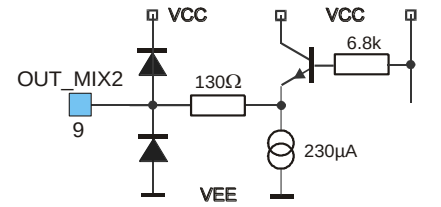	MIX2 output, approx. 330Ω output impedance
10	VEE_IF	ground		ground of IFA and DEMOD

Pin No.	Name	I/O Type	Functional Schematic	Description
11	IN_IFA	analog input	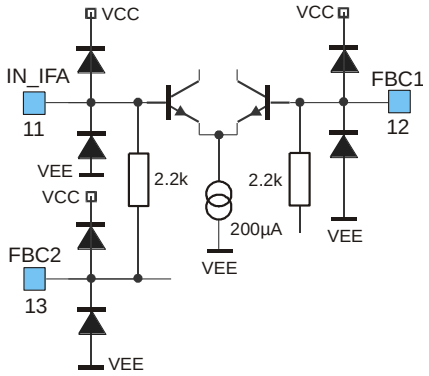	IFA input, approx. 2.2kΩ input impedance
12	FBC1	analog I/O		to be connected to external IFA feedback capacitor
13	FBC2	analog I/O		to be connected to external IFA feedback capacitor
14	VCC_IF	supply		positive supply of IFA and DEMOD
15	OUT_IFA	analog I/O	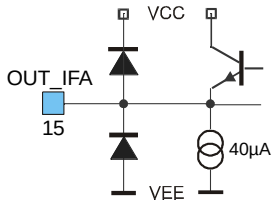	IFA output and MIX3 input (of DEMOD)
16	IN_DEM	analog input	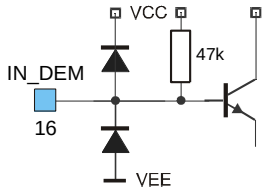	DEMOD input, to MIX3 core
17	VCC_BIAS	supply		positive supply of general bias system and OA
18	OUT_OA	analog output	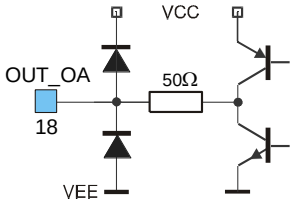	OA output, 40uA current drive capability
19	OAN	analog input	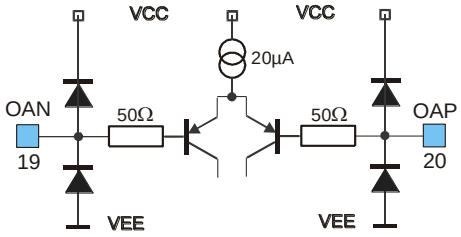	negative OA input
20	OAP	analog input		positive OA input

Pin No.	Name	I/O Type	Functional Schematic	Description
21	RSSI	analog output	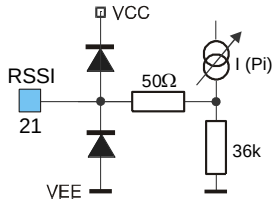	RSSI output, for RSSI and ASK detection, approx. 36kΩ output impedance
22	VEE_BIAS	ground		ground of general bias system and OA
23	OUTP	analog output	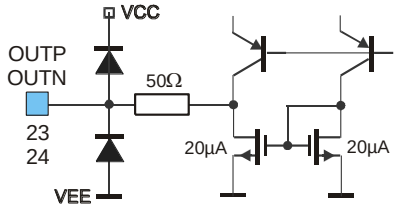	FSK positive output, output impedance of 100kΩ to 300kΩ
24	OUTN	analog output		FSK negative output, output impedance of 100kΩ to 300kΩ
25	VEE_RO	ground		ground of DIV, PFD, RO and charge pump
26	RO	analog input	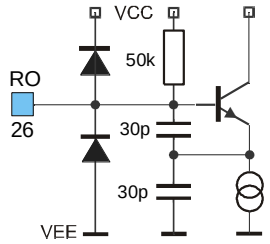	RO input, Colpitts type oscillator with internal feedback capacitors
27	VCC_PLL	supply		positive supply of DIV, PFD, RO and charge pump
28	ENRX	digital input	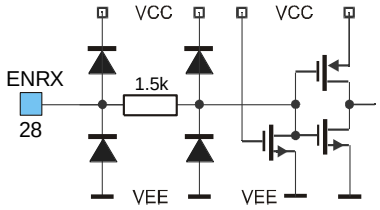	mode control input, CMOS-compatible with internal pull-down circuit
29	LF	analog I/O	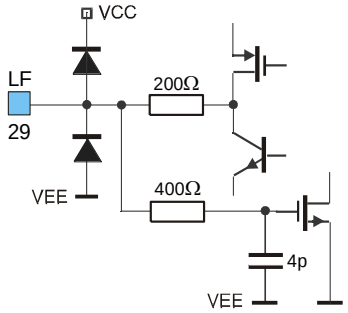	charge pump output and VCO1 control input
30	VEE_LNA	ground		ground of LNA biasing
32	VCC_LNA	supply		positive supply of LNA biasing

3. Technical Data

3.1. Absolute Maximum Ratings

Parameter	Symbol	Condition / Note	Min	Max	Unit
Supply voltage	V_{CC}		0	7.0	V
Input voltage	V_{IN}		- 0.3	V_{cc}+0.3	V
Input RF level	P_{iRF}	@ LNA input		10	dBm
Storage temperature	T_{STG}		-40	+125	°C
Junction temperature	T_J			+150	°C
Thermal Resistance	R_{thJA}			60	K/W
Power dissipation	P_{diss}			0.1	W
Electrostatic discharge	V_{ESD1}	human body model, 3)	-1.0	+1.0	kV
	V_{ESD2}	human body model, 4)	-0.75	+0.75	

3) all pins except OUT_LNA, IF1P and IF1N
4) pin OUT_LNA, IF1P and IF1N

3.2. Normal Operating Conditions

Parameter	Symbol	Condition	Min	Max	Unit
Supply voltage	$V_{CC, FSK}$	0 °C to 85 °C	2.5	5.5	V
		-20 °C to 85 °C	2.6	5.5	
		-40 °C to 85 °C	2.7	5.5	
	$V_{CC, ASK}$	-40 °C to 85 °C	2.3	5.5	
Operating temperature	T_A		-40	+85	ºC
Input low voltage (CMOS)	V_{IL}	ENRX pin		0.3*V_{CC}	V
Input high voltage (CMOS)	V_{IH}	ENRX pin	0.7*V_{CC}		V
Input frequency range	f_i		289.3	460.7	MHz
IF range	f_{IF}		0.4	22	MHz
XOSC frequency	f_{ref}	set by the crystal	18.75	28.125	MHz
VCO frequency	f_{LO}	$f_{LO} = 16 \bullet f_{ref}$	300	450	MHz
Frequency deviation	Δf		±2.5	±80	kHz
FSK data rate	R_{FSK}	NRZ, C15 = NIP, 5)		180	kbps
ASK data rate	R_{ASK}	NRZ, C16 = NIP, 5)		260	kbps

5) B_{IF} = 400 kHz, P_{IN} = -90 dBm

3.3. Crystal Parameters

Parameter	Symbol	Condition	Min	Max	Unit
Crystal frequency	f_0	fundamental mode, AT	18.75	28.125	MHz
Load capacitance	C_L		10	15	pF
Static capacitance	C_0			7	pF
Series resistance	R_1			50	Ω

3.4. DC Characteristics

all parameters under normal operating conditions, unless otherwise stated;
typical values at T_A= 23 °C and V_{CC} = 3 V

Parameter	Symbol	Condition	Min	Typ	Max	Unit
Operating Currents						
Standby current	I_{SBY}	ENRX=0		50	100	nA
Supply current at low gain	$I_{CC, low}$	ENRX=1 GAIN_LNA=1	4.0	6.5	12.0	mA
Supply current at high gain	$I_{CC, high}$	ENRX=1 GAIN_LNA=0	4.5	8.2	14.0	mA
Digital Pin Characteristics						
Input low voltage CMOS	V_{IL}	ENRX pin	-0.3		$0.3*V_{cc}$	V
Input high voltage CMOS	V_{IH}	ENRX pin	$0.7*V_{CC}$		V_{CC}+0.3	V
Pull down current ENRX pin	I_{PDEN}	ENRX=1	0.1	2	10	µA
Low level input current ENRX pin	I_{INLEN}	ENRX=0			0.05	µA
Analog Pin Characteristics						
High level input current GAIN_LNA pin	$I_{INHGAIN}$	GAIN_LNA=1			0.05	µA
Pull up current GAIN_LNA pin active	$I_{PUGAINa}$	GAIN_LNA=0 ENRX=1	0.08	0.15	0.3	µA
Pull up current GAIN_LNA pin standby	$I_{PUGAINs}$	GAIN_LNA=0 ENRX=0			0.05	µA
High gain input voltage	V_{IHGAIN}	ENRX=1			0.7	V
Low gain input voltage	V_{ILGAIN}	ENRX=1	1.5			V
Opamp Characteristics						
Opamp input offset voltage	V_{offs}		-35		35	mV
Opamp input offset current	I_{offs}	$I_{OAP} – I_{OAN}$	-50		50	nA
Opamp input bias current	I_{bias}	$0.5 * (I_{OAP} + I_{OAN})$	-150		150	nA
RSSI Characteristics						
RSSI voltage at low input level	$V_{RSSI, low}$	P_i = -65 dBm, GAIN_LNA=1	0.5	1.0	1.5	V
RSSI voltage at high input level	$V_{RSSI, high}$	P_i = -35 dBm, GAIN_LNA=1	1.2	1.9	2.5	V

3.5. AC System Characteristics

all parameters under normal operating conditions, unless otherwise stated;
typical values at T_A = 23 °C and V_{CC} = 3 V,
RF at 433.92 MHz; SAW frond-end filter loss and IF at 10.7 MHz;
all parameters based on test circuits as shown in Fig. 2, Fig.3 and Fig. 5

Parameter	Symbol	Condition	Min	Typ	Max	Unit
Receive Characteristics						
Input sensitivity – FSK (standard)	$P_{min, ST}$	B_{IF} = 180kHz, $\Delta f = \pm 20$kHz, 4kbps NRZ, BER $\leq 3 \cdot 10^{-3}$, 6)		-104		dBm
Input sensitivity – FSK (narrow band)	$P_{min, NB}$	B_{IF} = 30kHz, $\Delta f = \pm 5$kHz, 4kbps NRZ, BER $\leq 3 \cdot 10^{-3}$, 6)		-108		dBm
Input sensitivity – ASK	$P_{min, ASK}$	B_{IF} = 180kHz, 4kbps NRZ, BER $\leq 3 \cdot 10^{-3}$, 6)		-110		dBm
Maximum input signal – FSK	$P_{max, FSK}$	BER $\leq 3 \cdot 10^{-3}$ GAIN_LNA = 1		0		dBm
Maximum input signal – ASK	$P_{max, ASK}$	BER $\leq 3 \cdot 10^{-3}$ GAIN_LNA = 1		-10		dBm
Spurious emission	P_{spur}				-70	dBm
Image rejection	ΔP_{imag}			45		dB
Start-up Parameters						
Crystal start-up time	T_{XTL}	ENRX from 0 to 1			0.9	ms
Receiver start-up time	T_{RX}	ENRX from 0 to 1, depends on data slicer time constant, valid data at output			T_{XTL} + R4 · C17	
PLL Parameters						
VCO gain	K_{VCO}			250		MHz/V
Charge pump current	I_{CP}			60		µA

6) incl. 3 dB loss of front-end SAW filter

4. Test Circuits

4.1. Standard FSK Reception

4.1.1. Standard FSK Application Circuit

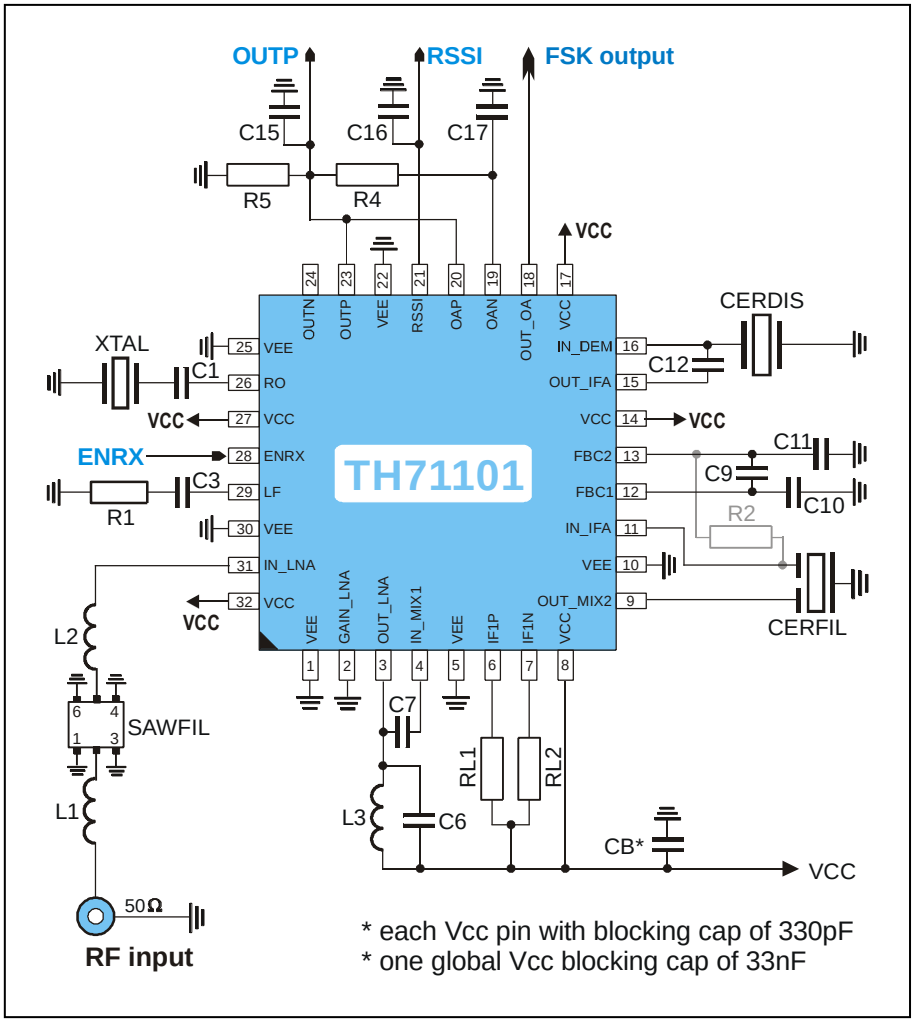

Fig. 2: Test circuit for FSK reception

Circuit Features

- Tolerates input frequency variations
- Well-suited for NRZ, Manchester and similar codes

4.1.2. Standard FSK Component List

Part	Size	Value @ 433.92 MHz	Tolerance	Description
C1	0805	27 pF	±5%	crystal series capacitor
C3	0603	1 nF	±10%	loop filter capacitor
C6	0603	4.7 pF	±5%	LNA output tank capacitor
C7	0603	2.2 pF	±5%	MIX1 input matching capacitor
C9	0603	33 nF	±10%	IFA feedback capacitor
C10	0603	1 nF	±10%	IFA feedback capacitor
C11	0603	1 nF	±10%	IFA feedback capacitor
C12	0805	10 pF	±5%	DEMOD phase-shift capacitor
C15	0805	100 pF	±5%	demodulator output low-pass capacitor, this value for data rates < 20 kbps NRZ
C16	0805	1.5 nF	±10%	RSSI output low-pass capacitor
C17	0805	10 nF	±10%	data slicer capacitor, this value for data rates > 0.8 kbps NRZ
R1	0603	10 kΩ	±5%	loop filter resistor
R2	0603	330 Ω	±5%	optional CERFIL output matching resistor
R4	0805	330 kΩ	±5%	data slicer resistor
R5	0805	220 kΩ	±5%	loading resistor
RL1	0805	470 Ω	±5%	MIX1 bias resistor
RL2	0805	470 Ω	±5%	MIX1 bias resistor
L1	0603	68 nH	±5%	SAW filter matching inductor from Würth-Elektronik (WE-KI series), or equivalent part
L2	0603	82 nH	±5%	
L3	0603	15 nH	±5%	LNA output tank inductor from Würth-Elektronik (WE-KI series), or equivalent part
XTAL	SMD 6x3.5	26.45125 MHz @ RF = 433.92 MHz	±25ppm cal. ±30ppm temp.	fundamental-mode crystal from Telcona/Horizon or equivalent part
SAWFIL	SMD 3x3	SAFCC433MBL0X00 (f_0 = 433.92 MHz)	B_{3dB} = 840 kHz	low-loss SAW filter from Murata, or equivalent part
CERFIL	SMD 3.45x3.1	SFECF10M7HA00	B_{3dB} = 180 kHz	ceramic filter from Murata, or equivalent part
CERDIS	SMD 4.5x2	CDSCB10M7GA135		ceramic discriminator from Murata, or equivalent part

- For component values for other frequencies, please refer to the EVB descriptions

4.2. Narrow Band FSK Reception

4.2.1. Narrow Band FSK Application Circuit

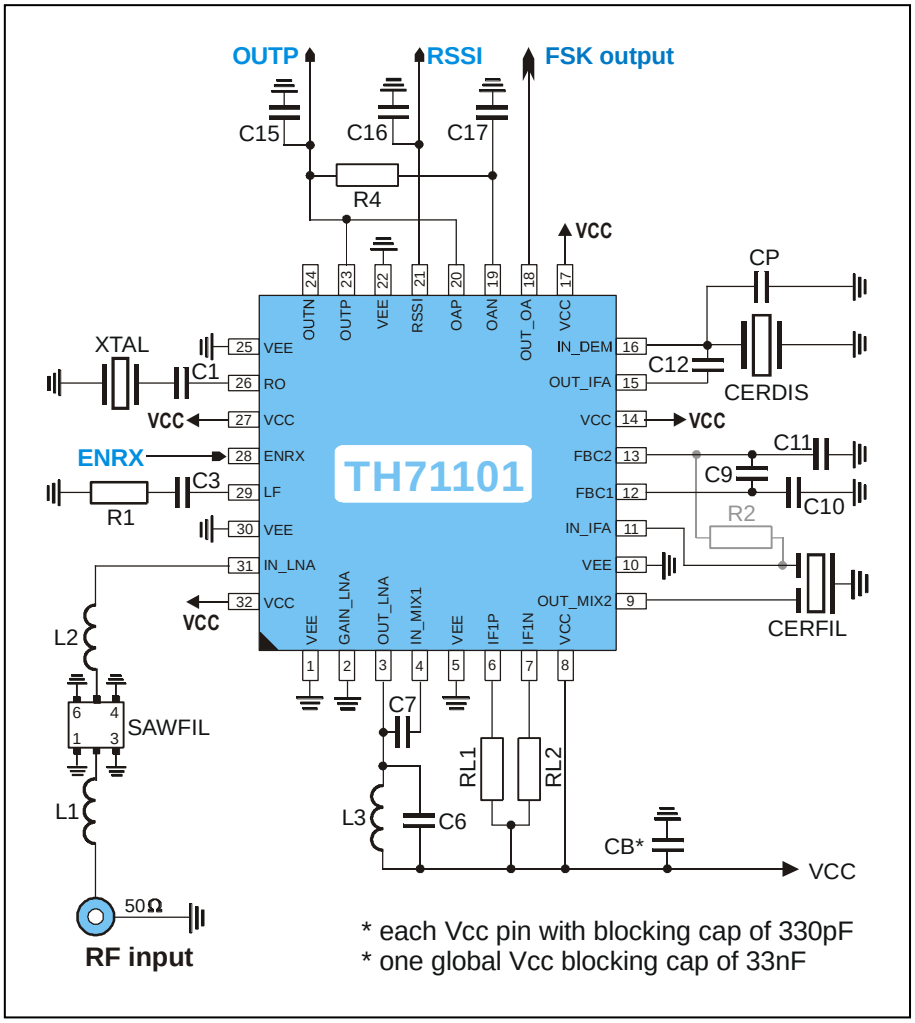

Fig. 3: Test circuit for FSK reception (narrow band)

Circuit Features

- Applicable for narrow band FSK

4.2.2. Narrow Band FSK Component List

Part	Size	Value @ 433.92 MHz	Tolerance	Description
C1	0805	27 pF	±5%	crystal series capacitor
C3	0603	1 nF	±10%	loop filter capacitor
C6	0603	4.7 pF	±5%	LNA output tank capacitor
C7	0603	2.2 pF	±5%	MIX1 input matching capacitor
C9	0603	33 nF	±10%	IFA feedback capacitor
C10	0603	1 nF	±10%	IFA feedback capacitor
C11	0603	1 nF	±10%	IFA feedback capacitor
C12	0805	1.5 pF	±5%	DEMOD phase-shift capacitor
C15	0805	220 pF	±5%	demodulator output low-pass capacitor, this value for data rates < 10 kbps NRZ
C16	0805	1.5 nF	±10%	RSSI output low-pass capacitor
C17	0805	10 nF	±10%	data slicer capacitor, this value for data rates > 0.8 kbps NRZ
CP	0603	6.8 - 8.2 pF	±5%	ceramic resonator loading capacitor
R1	0603	10 kΩ	±5%	loop filter resistor
R2	0603	330 Ω	±5%	optional CERFIL output matching resistor
R4	0805	330 kΩ	±5%	data slicer resistor
RL1	0805	470 Ω	±5%	MIX1 bias resistor
RL2	0805	470 Ω	±5%	MIX1 bias resistor
L1	0603	68 nH	±5%	SAW filter matching inductor from Würth-Elektronik (WE-KI series), or equivalent part
L2	0603	82 nH	±5%	
L3	0603	15 nH	±5%	LNA output tank inductor from Würth-Elektronik (WE-KI series), or equivalent part
XTAL	SMD 6x3.5	26.45125 MHz @ RF = 433.92 MHz	±25ppm cal. ±30ppm temp.	fundamental-mode crystal from Telcona/Horizon or equivalent part
SAWFIL	SMD 3x3	SAFCC433MBL0X00 (f_0 = 433.92 MHz)	B_{3dB} = 840 kHz	low-loss SAW filter from Murata, or equivalent part
CERFIL	Leaded type	SFKLA10M7NL00	B_{3dB} = 30 kHz	ceramic filter from Murata, or equivalent part
		SFVLA10M7LF00	B_{3dB} = 80 kHz	optional, ceramic filter from Murata, or equivalent part
CERDIS	SMD 4.5x2	CDSCB10M7GA135		ceramic discriminator from Murata, or equivalent part

- For component values for other frequencies, please refer to the EVB descriptions

4.3. ASK Reception

4.3.1. ASK Application Circuit

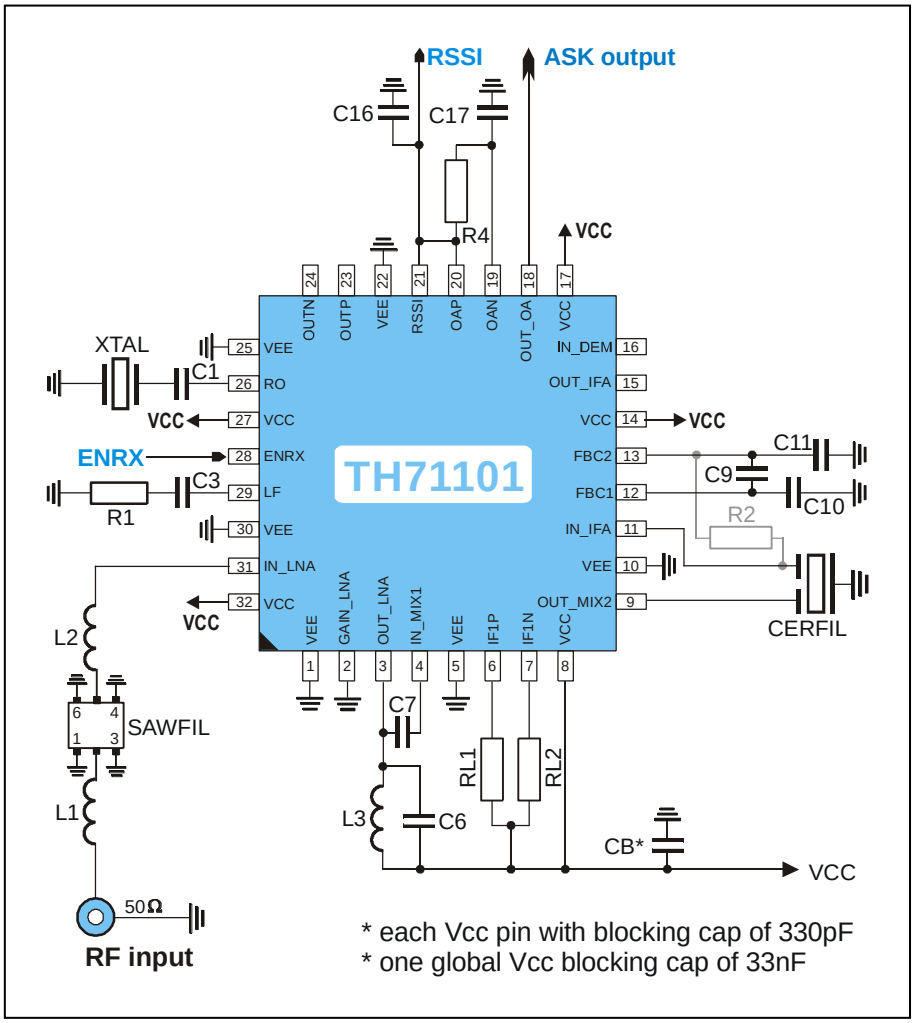

Fig. 5: Test circuit for ASK reception

4.3.2. ASK Component List

Part	Size	Value @ 433.92 MHz	Tolerance	Description
C1	0805	27 pF	±5%	crystal series capacitor
C3	0603	1 nF	±10%	loop filter capacitor
C6	0603	4.7 pF	±5%	LNA output tank capacitor
C7	0603	2.2 pF	±5%	MIX1 input matching capacitor
C9	0603	33 nF	±10%	IFA feedback capacitor
C10	0603	1 nF	±10%	IFA feedback capacitor
C11	0603	1 nF	±10%	IFA feedback capacitor
C16	0805	1.5 nF	±10%	RSSI output low-pass capacitor, this value for data rates < 10 kbps NRZ
C17	0805	10 nF	±10%	data slicer capacitor, this value for data rates > 0.8 kbps NRZ
R1	0603	10 kΩ	±5%	loop filter resistor
R2	0603	330 Ω	±5%	optional CERFIL output matching resistor
R4	0805	330 kΩ	±5%	data slicer resistor
RL1	0805	470 Ω	±5%	MIX1 bias resistor
RL2	0805	470 Ω	±5%	MIX1 bias resistor
L1	0603	68 nH	±5%	SAW filter matching inductor from Würth-Elektronik (WE-KI series), or equivalent part
L2	0603	82 nH	±5%	
L3	0603	15 nH	±5%	LNA output tank inductor from Würth-Elektronik (WE-KI series), or equivalent part
XTAL	SMD 6x3.5	26.45125 MHz @ RF = 433.92 MHz	±25ppm cal. ±30ppm temp.	fundamental-mode crystal from Telcona/Horizon or equivalent part
SAWFIL	SMD 3x3	SAFCC433MBL0X00 (f_0 = 433.92 MHz)	B_{3dB} = 840 kHz	low-loss SAW filter from Murata, or equivalent part
CERFIL	SMD 3.45x3.1	SFECF10M7HA00	B_{3dB} = 180 kHz	ceramic filter from Murata, or equivalent part
	Leaded type	SFVLA10M7LF00	B_{3dB} = 80 kHz	optional, ceramic filter from Murata, or equivalent part

- For component values for other frequencies, please refer to the EVB descriptions

5. Package Description

The device TH71101 is RoHS compliant.

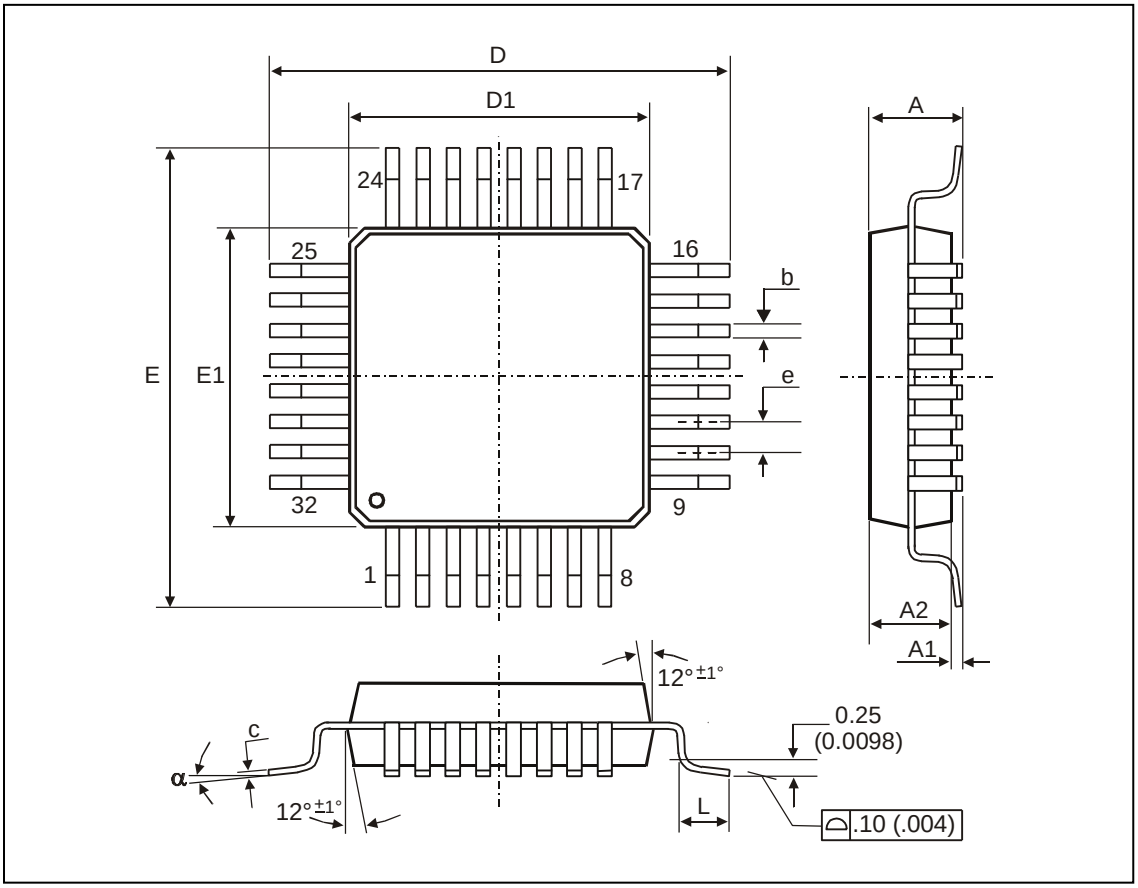

Fig. 6: LQFP32 (Low profile Quad Flat Package)

All Dimension in mm, coplanaríty < 0.1mm										
	E1, D1	E, D	A	A1	A2	e	b	c	L	α
min	7.00	9.00	1.40	0.05	1.35	0.8	0.30	0.09	0.45	0°
max			1.60	0.15	1.45		0.45	0.20	0.75	7°
All Dimension in inch, coplanaríty < 0.004”										
min	0.276	0.354	0.055	0.002	0.053	0.031	0.012	0.0035	0.018	0°
max			0.063	0.006	0.057		0.018	0.0079	0.030	7°

5.1. Soldering Information

- The device TH71101 is qualified for MSL3 with soldering peak temperature 260 deg C according to JEDEC J-STD-20.

6. Standard information regarding manufacturability of Melexis products with different soldering processes

Our products are classified and qualified regarding soldering technology, solderability and moisture sensitivity level according to following test methods:

Reflow Soldering SMD's (Surface Mount Devices)

- IPC/JEDEC J-STD-020
  Moisture/Reflow Sensitivity Classification for Nonhermetic Solid State Surface Mount Devices
  (classification reflow profiles according to table 5-2)
- EIA/JEDEC JESD22-A113
  Preconditioning of Nonhermetic Surface Mount Devices Prior to Reliability Testing
  (reflow profiles according to table 2)

Wave Soldering SMD's (Surface Mount Devices) and THD's (Through Hole Devices)

- EN60749-20
  Resistance of plastic- encapsulated SMD's to combined effect of moisture and soldering heat
- EIA/JEDEC JESD22-B106 and EN60749-15
  Resistance to soldering temperature for through-hole mounted devices

Iron Soldering THD's (Through Hole Devices)

- EN60749-15
  Resistance to soldering temperature for through-hole mounted devices

Solderability SMD's (Surface Mount Devices) and THD's (Through Hole Devices)

- EIA/JEDEC JESD22-B102 and EN60749-21
  Solderability

For all soldering technologies deviating from above mentioned standard conditions (regarding peak temperature, temperature gradient, temperature profile etc) additional classification and qualification tests have to be agreed upon with Melexis.

The application of Wave Soldering for SMD's is allowed only after consulting Melexis regarding assurance of adhesive strength between device and board.

Melexis is contributing to global environmental conservation by promoting **lead free** solutions. For more information on qualifications of **RoHS** compliant products (RoHS = European directive on the Restriction Of the use of certain Hazardous Substances) please visit the quality page on our website: http://www.melexis.com/quality.aspx

7. ESD Precautions

Electronic semiconductor products are sensitive to Electro Static Discharge (ESD).
Always observe Electro Static Discharge control procedures whenever handling semiconductor products.

8. Contact

For the latest version of this document, go to our website at www.melexis.com.

For additional information, please contact our Direct Sales team and get help for your specific needs:

Europe, Africa	Telephone: +32 13 67 04 95
	Email : sales_europe@melexis.com
Americas	Telephone: +1 603 223 2362
	Email : sales_usa@melexis.com
Asia	Email : sales_asia@melexis.com

9. Disclaimer

The information furnished by Melexis herein ("Information") is believed to be correct and accurate. Melexis disclaims (i) any and all liability in connection with or arising out of the furnishing, performance or use of the technical data or use of the product(s) as described herein ("Product") (ii) any and all liability, including without limitation, special, consequential or incidental damages, and (iii) any and all warranties, express, statutory, implied, or by description, including warranties of fitness for particular purpose, non-infringement and merchantability. No obligation or liability shall arise or flow out of Melexis' rendering of technical or other services.
The Information is provided "as is" and Melexis reserves the right to change the Information at any time and without notice. Therefore, before placing orders and/or prior to designing the Product into a system, users or any third party should obtain the latest version of the relevant information to verify that the information being relied upon is current.
Users or any third party must further determine the suitability of the Product for its application, including the level of reliability required and determine whether it is fit for a particular purpose.
The Information is proprietary and/or confidential information of Melexis and the use thereof or anything described by the Information does not grant, explicitly or implicitly, to any party any patent rights, licenses, or any other intellectual property rights.
This document as well as the Product(s) may be subject to export control regulations. Please be aware that export might require a prior authorization from competent authorities.
The Product(s) are intended for use in normal commercial applications. Unless otherwise agreed upon in writing, the Product(s) are not designed, authorized or warranted to be suitable in applications requiring extended temperature range and/or unusual environmental requirements. High reliability applications, such as medical life-support or life-sustaining equipment are specifically not recommended by Melexis.
The Product(s) may not be used for the following applications subject to export control regulations: the development, production, processing, operation, maintenance, storage, recognition or proliferation of 1) chemical, biological or nuclear weapons, or for the development, production, maintenance or storage of missiles for such weapons: 2) civil firearms, including spare parts or ammunition for such arms; 3) defense related products, or other material for military use or for law enforcement; 4) any applications that, alone or in combination with other goods, substances or organisms could cause serious harm to persons or goods and that can be used as a means of violence in an armed conflict or any similar violent situation.
The Products sold by Melexis are subject to the terms and conditions as specified in the Terms of Sale, which can be found at https://www.melexis.com/en/legal/terms-and-conditions.

This document supersedes and replaces all prior information regarding the Product(s) and/or previous versions of this document.

Melexis NV © - No part of this document may be reproduced without the prior written consent of Melexis. (2016)

ISO/TS 16949 and ISO14001 Certified