LTC3103EDD
1.8µA Quiescent Current, 15V, 300mA Synchronous Step-Down DC/DC Converter

DESCRIPTION

Demonstration Circuit 1883A features the LTC®3103, a high efficiency, monolithic synchronous step-down converter using a current mode architecture capable of supplying 300mA of output current. The IC operates with a fixed frequency oscillator at 1.2MHz.

The LTC3103 has two user selectable (JP2) operating modes: Burst Mode® operation and forced continuous operation (fixed frequency PWM). The IC has internal compensation and an accurate programmable RUN pin.

The LTC3103 operates with a 2.5V to 15V input voltage range. The demo board has been designed with a main output set to 1.8V. Since the LTC3103 is a buck converter, as V_{IN} approaches V_{OUT}, the output will start dropping out of regulation. Consult the data sheet for information on the minimum V_{IN} to V_{OUT} differential for regulation. The regulation range is also a function of the load current. Typical demo board efficiency is shown in Figures 1 and 2.

The LTC3103 data sheet has detailed information about the operation, specification and applications of the part. The data sheet should be read in conjunction with this Quick Start Guide.

Design files for this circuit board are available at http://www.linear.com/demo

LT, LTC, LTM, Linear Technology, Burst Mode and the Linear logo are registered trademarks of Linear Technology Corporation. All other trademarks are the property of their respective owners.

PERFORMANCE SUMMARY (T_A = 25°C)

PARAMETER	CONDITIONS	TYPICAL VALUE
Input Voltage Range	(See Note 1)	2.5V to 15V
V_{OUT}	(See Note 1)	1.8V
I_{OUT}		300mA

Note 1. The demo board can operate with V_{IN} less than V_{OUT}, however V_{OUT} will drop out of regulation. The regulation range is a function of I_{OUT}. Please refer to the data sheet for more information.

QUICK START PROCEDURE

Using short twisted-pair leads for any power connections and with all loads and power supplies off, refer to Figure 3 for the proper measurement and equipment setup. The battery/power supply (PS1) should not be connected to the circuit until it is stated in the following procedure.

When measuring the input or output voltage ripple, care must be taken to avoid a long ground lead on the oscilloscope probe. Measure the input or output voltage ripple by touching the probe tip directly across the V_{IN} or V_{OUT} and GND terminals (see Figure 4), or by using an oscilloscope probe tip jack.

1. Jumper, PS1 and LOAD settings to start:

   PS1 = OFF

   JP1 (RUN) = OFF

   JP2 (MODE) = FIXED FREQUENCY

2. With power off, connect the power supply (PS1) as shown in Figure 3. If accurate current measurements are desired (for efficiency calculation for example), then connect an ammeter in series with the supply as shown. The ammeter is not required, however.

3. Connect a load to V_{OUT}, as shown in Figure 3. The load can be up to 300mA or 6Ω for V_{OUT} = 1.8V. Connect an ammeter if accurate current measurement or monitoring is desired.

4. Turn on PS1 and slowly increase voltage until the voltage at V_{IN} is 5V. Move Jumper JP1 to ON.

5. Verify V_{OUT} is ~1.8V.

6. V_{IN} can now be varied between 3V and 15V. V_{OUT} should remain in regulation.

7. V_{IN} can also be varied down to 2.5V. For $V_{IN} \leq 3V$, V_{OUT} may drop out of regulation, as previously described.

8. I_{OUT} can also be varied from 0mA to 300mA.

9. For Burst Mode operation, move jumper JP2 to BURST. See the data sheet for more information.

NOTES:

(1) If V_{OUT} drops out of regulation, check to be sure the maximum load has not been exceeded, or that V_{IN} is not below the minimum value for regulation (see the data sheet).

(2) To measure no-load input current, remove R4.

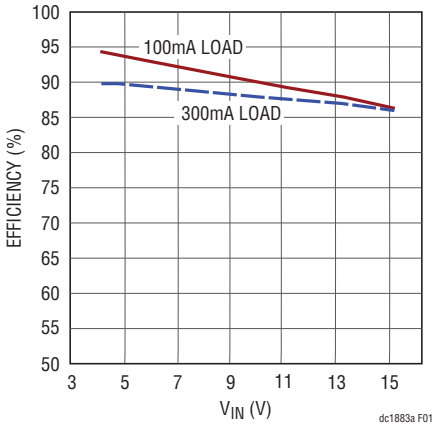

Figure 1. DC1883A Efficiency in PWM Mode

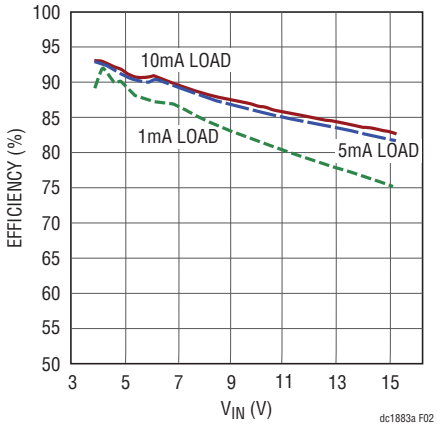

Figure 2. DC1883A Efficiency in Burst Mode Operation

QUICK START PROCEDURE

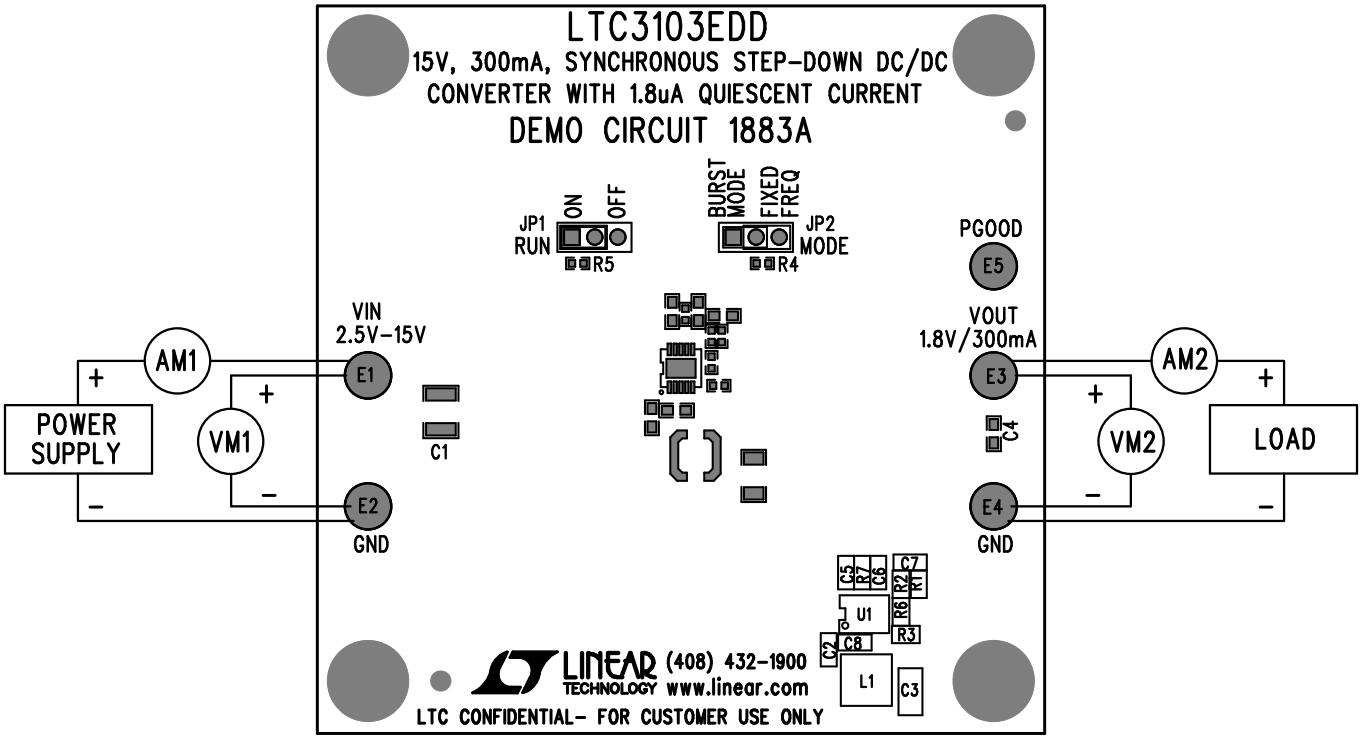

Figure 3. Proper Measurement Equipment Setup

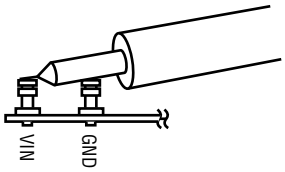

Figure 4. Measuring Input or Output Ripple

PARTS LIST

ITEM	QTY	REFERENCE	PART DESCRIPTION	MANUFACTURER/PART NUMBER
Required Circuit Components				
1	1	C1	CAP CER, 10µF, 25V, X5R, 1210	TDK, C3225X5R1E106M
2	3	C2, C4, C6	CAP CER, 1µF, 25V, X5R, 0603	TDK, C1608X5R1E105M
3	1	C3	CAP CER, 22µF, 10V, X5R, 20%, 1206	TDK, C3216X5R1A226M
4	1	C7	CAP CER, 12pF, 50V, C0G 5%, 0603	TDK, C1608C0G1H120J
5	1	C8	CAP CER, 0.1µF, 50V, X7R, 0603	TDK, C1608X7R1H104M
6	1	L1	Inductor, 15µH	Coilcraft, LPS4018-153MLB
7	1	R1	RES, 2MΩ, 1/10W, 1%, 0402, SMD	Panasonic, ERJ-2GEJ205X
8	1	R2	RES, 2.21kΩ, 1/10W, 1%, 0402, SMD	Panasonic, ERJ-2RKF2211X
9	4	R3, R4, R5, R6	RES, 1MΩ, 1/10W, 1%, 0402, SMD	Panasonic, ERJ2RKF1004X
10	1	U1	LTC3103EDD	Linear Technology Corporation, LTC3103EDD
Additional Demo Board Circuit Components				
1	0	C5 (OPT)	CAP CER, 1000pF, 50V, X7R, 20%, 0603	OPT
2	0	C9 (OPT)	OPT CAP TANT, 68µF, 20V, 10%, SMD, 7343	OPT
3	0	R9	OPT RES, 1/10W, 1%, 0402, SMD	OPT
Hardware—for Demo Board Only				
1	5	E1, E2, E3, E4, E5	Testpoint, Turret 0.094"	Mill-Max, 2501-2-00-80-00-00-07-0
2	2	JP1, JP2	JMP, 0.079” Single Row Header, 30-Pin	Samtec, TMM-103-02-L-S
3	2	XJP1, XJP2	Shunt, 0.079" Center	Samtec, 2SN-BK-G
4	4	(Stand-Offs)	Stand-Off, Nylon, 0.375" Tall	Keystone, 8832 (Snap on)

SCHEMATIC DIAGRAM

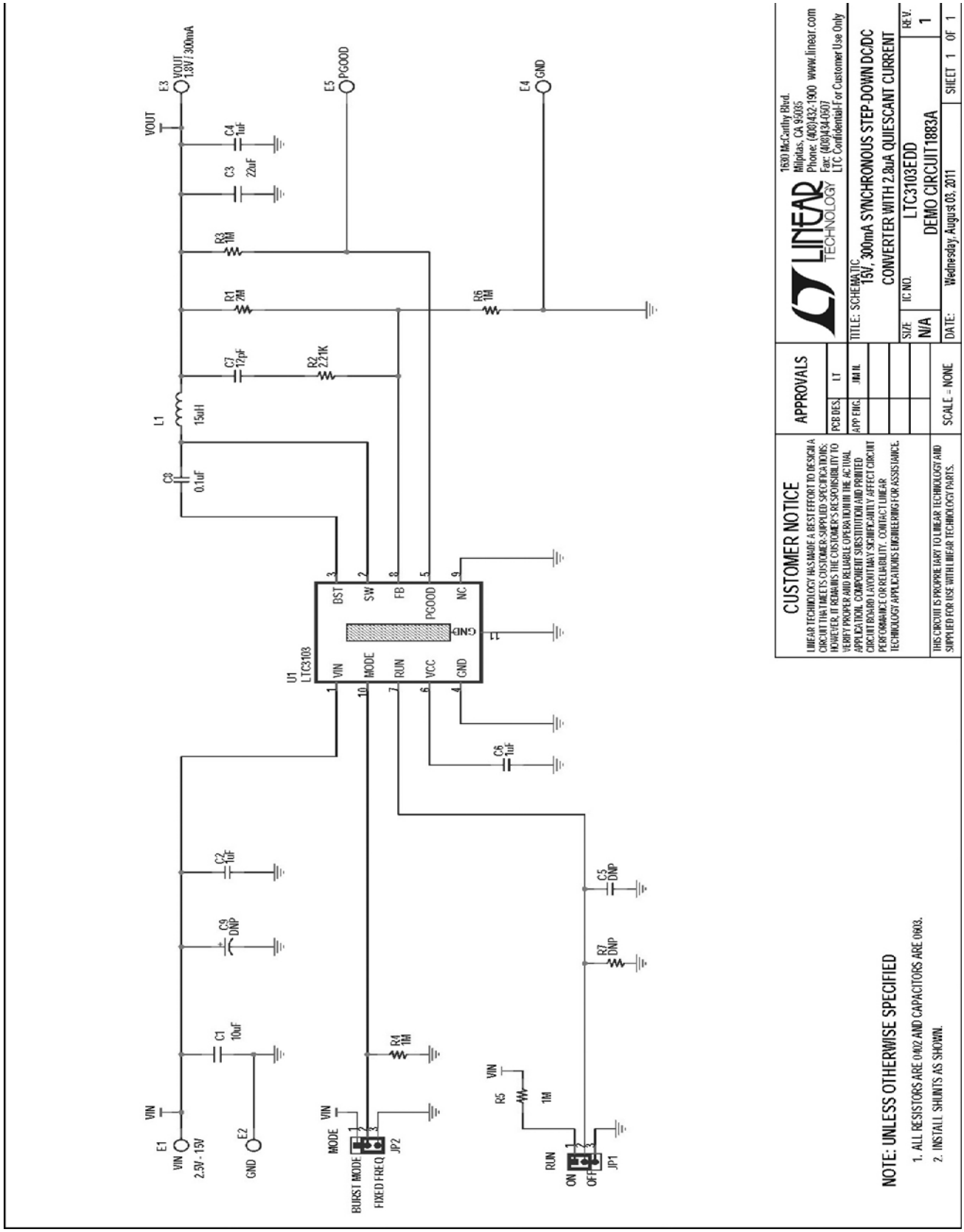

Figure 5. Circuit Schematic

Information furnished by Linear Technology Corporation is believed to be accurate and reliable. However, no responsibility is assumed for its use. Linear Technology Corporation makes no representation that the interconnection of its circuits as described herein will not infringe on existing patent rights.

DEMONSTRATION BOARD IMPORTANT NOTICE

Linear Technology Corporation (LTC) provides the enclosed product(s) under the following **AS IS** conditions:

This demonstration board (DEMO BOARD) kit being sold or provided by Linear Technology is intended for use for **ENGINEERING DEVELOPMENT OR EVALUATION PURPOSES ONLY** and is not provided by LTC for commercial use. As such, the DEMO BOARD herein may not be complete in terms of required design-, marketing-, and/or manufacturing-related protective considerations, including but not limited to product safety measures typically found in finished commercial goods. As a prototype, this product does not fall within the scope of the European Union directive on electromagnetic compatibility and therefore may or may not meet the technical requirements of the directive, or other regulations.

If this evaluation kit does not meet the specifications recited in the DEMO BOARD manual the kit may be returned within 30 days from the date of delivery for a full refund. THE FOREGOING WARRANTY IS THE EXCLUSIVE WARRANTY MADE BY THE SELLER TO BUYER AND IS IN LIEU OF ALL OTHER WARRANTIES, EXPRESSED, IMPLIED, OR STATUTORY, INCLUDING ANY WARRANTY OF MERCHANTABILITY OR FITNESS FOR ANY PARTICULAR PURPOSE. EXCEPT TO THE EXTENT OF THIS INDEMNITY, NEITHER PARTY SHALL BE LIABLE TO THE OTHER FOR ANY INDIRECT, SPECIAL, INCIDENTAL, OR CONSEQUENTIAL DAMAGES.

The user assumes all responsibility and liability for proper and safe handling of the goods. Further, the user releases LTC from all claims arising from the handling or use of the goods. Due to the open construction of the product, it is the user's responsibility to take any and all appropriate precautions with regard to electrostatic discharge. Also be aware that the products herein may not be regulatory compliant or agency certified (FCC, UL, CE, etc.).

No License is granted under any patent right or other intellectual property whatsoever. **LTC assumes no liability for applications assistance, customer product design, software performance, or infringement of patents or any other intellectual property rights of any kind.**

LTC currently services a variety of customers for products around the world, and therefore this transaction **is not exclusive**.

Please read the DEMO BOARD manual prior to handling the product. Persons handling this product must have electronics training and observe good laboratory practice standards. **Common sense is encouraged**.

This notice contains important safety information about temperatures and voltages. For further safety concerns, please contact a LTC application engineer.

Mailing Address:

Linear Technology

1630 McCarthy Blvd.

Milpitas, CA 95035

Copyright © 2004, Linear Technology Corporation

Linear Technology Corporation
1630 McCarthy Blvd., Milpitas, CA 95035-7417
(408) 432-1900 • FAX: (408) 434-0507 • www.linear.com

LT 1211 • PRINTED IN USA

© LINEAR TECHNOLOGY CORPORATION 2011