SD-38002-0274

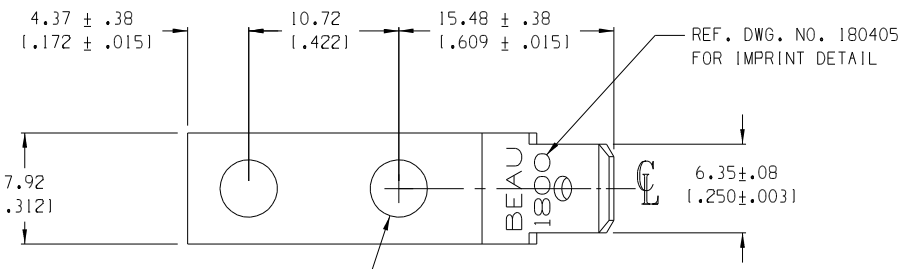

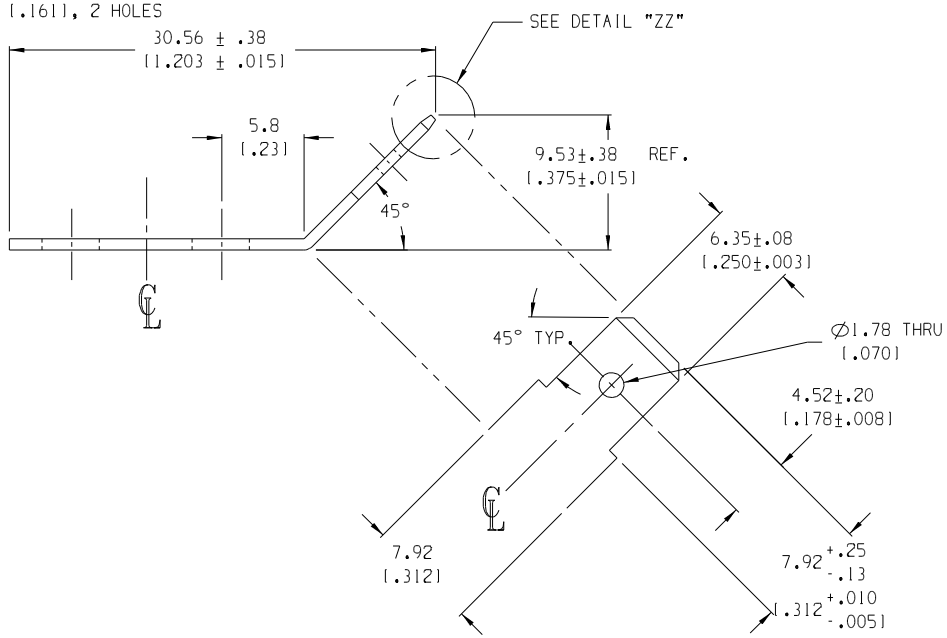

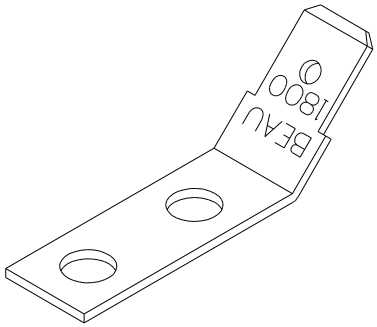

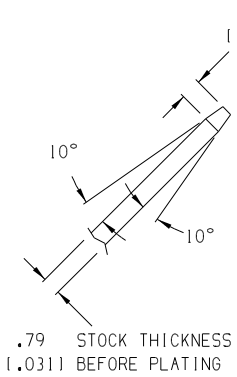

DETAIL "ZZ"
SCALE 5:1

NOTES:

1. MATERIAL: SEE TABLE
2. FINISHES: SEE TABLE
3. PRODUCT SPECIFICATION: NOT REQUIRED
4. PACKAGING: NOT REQUIRED
5. MATES WITH: NONE
6. INCH DIMS ARE SHOWN IN PARENTHESIS (XXX)

MATERIAL NO.	DESCRIPTION	FINISH
380020274	70/30 BRASS, HALF HARD	TIN PLATED

REV	DESCRIPTION
A	RELEASED EC NO. DRWN: RK CH'K: APPR:

QUALITY SYMBOLS: MAJOR; CRITICAL (C); SPC (S)

GENERAL TOLERANCES: (UNLESS SPECIFIED)

	mm	INCH
4 PLACES		±.0015
3 PLACES	±.038	±.005
2 PLACES	±.13	±.01
1 PLACE	±.3	
ANGULAR:	±2°	

DRAFT WHERE APPLICABLE MUST REMAIN WITHIN DIMENSIONS

SCALE 3:1 | DESIGN UNITS ☐ mm ☒ INCH | THIRD ANGLE PROJECTION

DRAWN BY & DATE: R. KEMP 8-15-05
CHECKED BY & DATE
APPROVED BY & DATE
CAD FILENAME: 180412

PROJECT NO. - | SHT - | REV -
DIMENSIONS: ☒ mm/INCH ☐ INCH/mm ☐ mm ONLY
REVISE ON CAD ONLY

TITLE: TERMINAL, FAST-TAB SL, OPTION -1814

molex MOLEX INCORPORATED

MATERIAL NO.: SEE CHART | DRAWING NO.: SD-38002-0274 | SHEET NO.: 1 OF 1

THIS DRAWING CONTAINS INFORMATION THAT IS PROPRIETARY TO MOLEX INCORPORATED AND SHOULD NOT BE USED WITHOUT WRITTEN PERMISSION.

SIZE B