AS85049/23 and MS3189C
45° EMI/RFI Non-Environmental Backshell

Glenair®

CONNECTOR DESIGNATOR:	
A	AS50151 Series AS34001 MIL-DTL-26482 Series II AS81703 Series III MIL-DTL-83723 Series I & III 40M39569, DEF 5326-3, EN 2997 EN 3646, ESC 10, ESC 11, LN 29504 NFC93422 Series HE302 PAN 6432-1, PAN 6432-2, PATT 602

Basic Part Number	Dash Number (Table II)	
M85049/23	- 21	N

Finish / Material

B = Black Cadmium / Stainless Steel
N = Electroless Nickel / Aluminum
S = Passivated / Stainless Steel
W = 1,000 Hr. Cadmium Olive Drab over Electroless Nickel / Aluminum
X = Aluminum, Nickel Fluorocarbon Polymer
Z = Aluminum, Zinc-Nickel, Black
XS = Stainless Steel, Nickel Flurocarbon Polymer
ZS = Stainless Steel, Zinc-Nickel, Black

Superseded Part Number

MS3189C 21 N

Basic Part No. — Dash No.

Finish
(Material is Aluminum Only)

A = Cadmium Olive Drab over Nickel
C = Cadmium Olive Drab
N = Electroless Nickel

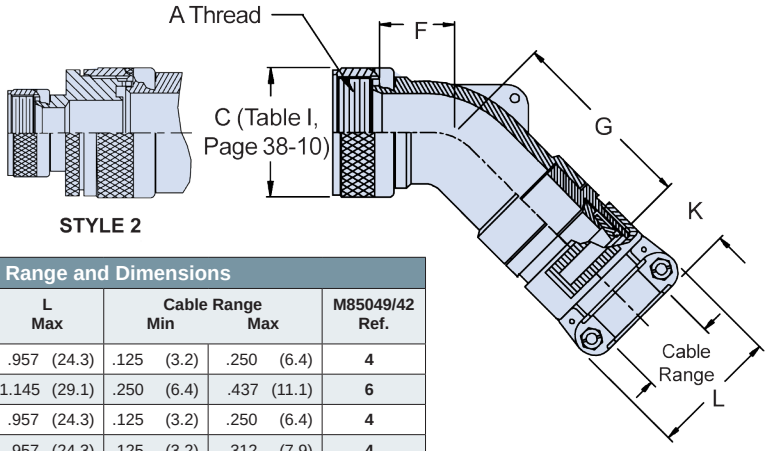

STYLE 2

TABLE II: Dash Number, Cable Range and Dimensions

Dash No.	Shell Size	F Max	G Max	K Ref.	L Max	Cable Range Min	Cable Range Max	M85049/42 Ref.
1	3	.687 (17.4)	1.915 (48.6)	1.027 (26.1)	.957 (24.3)	.125 (3.2)	.250 (6.4)	4
2	3	1.500 (38.1)	2.035 (51.7)	1.027 (26.1)	1.145 (29.1)	.250 (6.4)	.437 (11.1)	6
3	8	.625 (15.9)	1.307 (33.2)	1.027 (26.1)	.957 (24.3)	.125 (3.2)	.250 (6.4)	4
4	10	.687 (17.4)	1.975 (50.2)	1.027 (26.1)	.957 (24.3)	.125 (3.2)	.312 (7.9)	4
5	10	.687 (17.4)	1.370 (34.8)	1.027 (26.1)	1.145 (29.1)	.250 (6.4)	.375 (9.5)	6
6	12	.750 (19.1)	2.035 (51.7)	1.027 (26.1)	.957 (24.3)	.125 (3.2)	.312 (7.9)	4
7	12	.750 (19.1)	2.035 (51.7)	1.027 (26.1)	1.145 (29.1)	.250 (6.4)	.437 (11.1)	6
8	12	.750 (19.1)	2.035 (51.7)	1.027 (26.1)	1.332 (33.8)	.350 (8.9)	.500 (12.7)	10
9	14	.812 (20.6)	2.125 (54.0)	1.027 (26.1)	1.145 (29.1)	.250 (6.4)	.437 (11.1)	6
10	14	.812 (20.6)	1.780 (45.2)	1.027 (26.1)	1.332 (33.8)	.350 (8.9)	.575 (14.6)	10
11	16	.906 (23.0)	2.235 (56.8)	1.027 (26.1)	1.145 (29.1)	.250 (6.4)	.437 (11.1)	6
12	16	.906 (23.0)	1.875 (47.6)	1.059 (26.9)	1.551 (39.4)	.500 (12.7)	.700 (17.8)	12
13	18	1.093 (27.8)	2.425 (61.6)	1.027 (26.1)	1.332 (33.8)	.350 (8.9)	.625 (15.9)	10
14	18	1.093 (27.8)	2.062 (52.4)	1.156 (29.4)	1.770 (45.0)	.625 (15.9)	.779 (19.8)	16
15	20	1.093 (27.8)	2.425 (61.6)	1.027 (26.1)	1.332 (33.8)	.350 (8.9)	.625 (15.9)	10
16	20	1.093 (27.8)	2.062 (52.4)	1.156 (29.4)	1.770 (45.0)	.625 (15.9)	.904 (23.0)	16
17	22	1.188 (30.2)	2.575 (65.4)	1.059 (26.9)	1.551 (39.4)	.500 (12.7)	.750 (19.1)	12
18	22	1.188 (30.2)	2.218 (56.3)	1.375 (34.9)	2.113 (53.7)	.875 (22.2)	1.029 (26.1)	20
19	24	1.188 (30.2)	2.575 (65.4)	1.069 (27.2)	1.551 (39.4)	.500 (12.7)	.750 (19.1)	12
20	24	1.188 (30.2)	2.218 (56.3)	1.375 (34.9)	2.113 (53.7)	.875 (22.2)	1.144 (29.1)	20
21	28	1.312 (33.3)	2.625 (66.7)	1.156 (33.7)	1.770 (45.0)	.625 (15.9)	.937 (23.8)	16

Continued on Page B-44

APPLICATION NOTES

1. For complete dimensions see the applicable Military Specification.
2. When maximum cable entry is exceeded, Style 2 will be supplied.
3. Metric dimensions (mm) are in parentheses.
4. Cable Range is defined as the accommodation range for the wire bundle or cable. Dimensions shown are not intended for inspection criteria.

Dimensions in inches (millimeters) and are subject to change without notice.

© 2013 Glenair, Inc. U.S. CAGE Code 06324 Printed in U.S.A.

AS85049/23 and MS3189C
45° EMI/RFI Non-Environmental Backshell

TABLE II: Continued from Page B-43

Dash No.	Shell Size	F Max	G Max	K Ref.	L Max	Cable Range Min	Cable Range Max	M85049/42 Ref.
22	28	1.312 (33.3)	2.281 (57.9)	1.500 (38.1)	2.363 (60.0)	1.000 (25.4)	1.375 (34.9)	24
23	32	1.375 (34.9)	2.725 (69.2)	1.156 (29.4)	1.770 (45.0)	.625 (15.9)	.937 (23.8)	16
24	32	1.375 (34.9)	2.725 (69.2)	1.375 (34.9)	2.113 (53.7)	.875 (22.2)	1.250 (31.8)	20
25	32	1.375 (34.9)	2.500 (63.5)	1.781 (45.2)	2.770 (70.4)	1.250 (31.8)	1.625 (41.3)	28
26	36	1.406 (35.7)	2.815 (71.5)	1.156 (29.4)	1.770 (45.0)	.625 (15.9)	.937 (23.8)	16
27	36	1.406 (35.7)	2.815 (71.5)	1.500 (38.1)	2.363 (60.0)	1.000 (25.4)	1.375 (34.9)	24
28	36	1.406 (35.7)	2.469 (62.7)	1.830 (46.5)	3.020 (76.7)	1.437 (36.5)	1.840 (46.7)	32
29	40	2.156 (54.8)	2.815 (71.5)	1.156 (29.4)	1.770 (45.0)	.625 (15.9)	.937 (23.8)	16
30	40	2.156 (54.8)	2.815 (71.5)	1.500 (38.1)	2.363 (60.0)	1.000 (25.4)	1.375 (34.9)	24
31	40	2.156 (54.8)	2.469 (62.7)	1.830 (46.5)	3.020 (76.7)	1.437 (36.5)	1.875 (47.6)	32
32	44	2.156 (54.8)	2.815 (71.5)	1.156 (29.4)	1.770 (45.0)	.625 (15.9)	.937 (23.8)	16
33	44	2.156 (54.8)	2.815 (71.5)	1.500 (38.1)	2.363 (60.0)	1.000 (25.4)	1.375 (34.9)	24
34	44	2.156 (54.8)	2.469 (62.7)	1.830 (46.5)	3.020 (76.7)	1.437 (36.5)	1.875 (47.6)	32
35	48	2.156 (54.8)	2.815 (71.5)	1.156 (29.4)	1.770 (45.0)	.625 (15.9)	.937 (23.8)	16
36	48	2.156 (54.8)	2.815 (71.5)	1.500 (38.1)	2.363 (60.0)	1.000 (25.4)	1.375 (34.9)	24
37	48	2.156 (54.8)	2.469 (62.7)	1.830 (46.5)	3.020 (76.7)	1.437 (36.5)	1.875 (47.6)	32
38	61	1.188 (30.2)	2.575 (65.4)	1.059 (26.9)	1.551 (39.4)	.500 (12.7)	.750 (19.1)	12
39	61	1.188 (30.2)	2.218 (56.3)	1.375 (34.9)	2.113 (53.7)	.875 (22.2)	1.184 (30.1)	20
40	16	.906 (23.0)	2.235 (56.8)	1.027 (26.1)	1.332 (33.8)	.350 (8.9)	.625 (15.9)	10
41	18	1.093 (27.8)	2.425 (61.6)	1.027 (26.1)	.957 (24.3)	.125 (3.2)	.312 (7.9)	4
42	18	1.093 (27.8)	2.425 (61.6)	1.027 (26.1)	1.145 (29.1)	.250 (6.4)	.437 (11.1)	6
43	20	1.093 (27.8)	2.425 (61.6)	1.027 (26.1)	1.145 (29.1)	.250 (6.4)	.437 (11.1)	6
44	22	1.188 (30.2)	2.575 (65.4)	1.027 (26.1)	.957 (24.3)	.125 (3.2)	.312 (7.9)	4
45	22	1.188 (30.2)	2.575 (65.4)	1.027 (26.1)	1.145 (29.1)	.250 (6.4)	.437 (11.1)	6
46	24	1.188 (30.2)	2.575 (65.4)	1.027 (26.1)	1.332 (33.8)	.350 (8.9)	.625 (15.9)	10
47	36	1.406 (35.7)	2.815 (71.5)	1.059 (26.9)	1.551 (39.4)	.500 (12.7)	.750 (19.1)	12
48	40	2.156 (54.8)	2.815 (71.5)	1.059 (26.9)	1.551 (39.4)	.500 (12.7)	.750 (19.1)	12
49*	10	1.500 (38.1)	2.035 (51.7)	1.027 (26.1)	1.145 (29.1)	.250 (6.4)	.437 (11.1)	6
50*	14	1.842 (46.8)	2.425 (61.6)	1.059 (26.9)	1.551 (39.4)	.500 (12.7)	.750 (19.1)	12
51*	16	1.938 (49.2)	2.575 (65.4)	1.156 (29.4)	1.770 (45.0)	.625 (15.9)	.937 (23.8)	16
52	18	1.093 (27.8)	2.425 (61.6)	1.059 (26.9)	1.551 (39.4)	.500 (12.7)	.750 (19.1)	12
53	61	1.188 (30.2)	2.575 (65.4)	1.156 (29.4)	1.770 (45.0)	.625 (15.9)	.937 (23.8)	16
54	20	1.093 (27.8)	2.425 (61.6)	1.059 (26.9)	1.551 (39.4)	.500 (12.7)	.750 (19.1)	12
55*	20	2.061 (52.3)	2.625 (66.7)	1.375 (34.9)	2.113 (53.7)	.875 (22.2)	1.250 (31.8)	20
56	22	1.188 (30.2)	2.575 (65.4)	1.027 (26.1)	1.332 (33.8)	.350 (8.9)	.625 (15.9)	10
57	22	1.188 (30.2)	2.575 (65.4)	1.156 (29.4)	1.770 (45.0)	.625 (15.9)	.937 (23.8)	16
58*	22	2.061 (52.3)	2.625 (66.7)	1.375 (34.9)	2.113 (53.7)	.875 (22.2)	1.250 (31.8)	20
59	24	1.188 (30.2)	2.575 (65.4)	1.156 (29.4)	1.770 (45.0)	.625 (15.9)	.937 (23.8)	16
60	28	1.312 (33.3)	2.625 (66.7)	1.059 (26.9)	1.551 (39.4)	.500 (12.7)	.750 (19.1)	12
61	28	1.312 (33.3)	2.625 (66.7)	1.375 (34.9)	2.113 (53.7)	.875 (22.2)	1.250 (31.8)	20
62	32	1.375 (34.9)	2.725 (69.2)	1.500 (38.1)	2.363 (60.0)	1.000 (25.4)	1.375 (34.9)	24
63	36	1.406 (35.7)	2.815 (71.5)	1.375 (34.9)	2.113 (53.7)	.875 (22.2)	1.250 (31.8)	20
64	36	1.406 (35.7)	2.815 (71.5)	1.781 (45.2)	2.770 (70.4)	1.250 (31.8)	1.625 (41.3)	28
65	40	2.156 (54.8)	2.815 (71.5)	1.375 (34.9)	2.113 (53.7)	.875 (22.2)	1.250 (31.8)	20
66	40	2.156 (54.8)	2.815 (71.5)	1.781 (45.2)	2.770 (70.4)	1.250 (31.8)	1.625 (41.3)	28
67	44	2.156 (54.8)	2.815 (71.5)	1.375 (34.9)	2.113 (53.7)	.875 (22.2)	1.250 (31.8)	20
68	44	2.156 (54.8)	2.815 (71.5)	1.781 (45.2)	2.770 (70.4)	1.250 (31.8)	1.625 (41.3)	28
69	48	2.156 (54.8)	2.815 (71.5)	1.375 (34.9)	2.113 (53.7)	.875 (22.2)	1.250 (31.8)	20
70	48	2.156 (54.8)	2.815 (71.5)	1.781 (45.2)	2.770 (70.4)	1.250 (31.8)	1.625 (41.3)	28
71*	12	1.684 (42.8)	2.236 (56.8)	1.027 (26.1)	1.332 (33.8)	.350 (8.9)	.625 (15.9)	10
72*	18	1.938 (49.2)	2.575 (65.4)	1.156 (29.4)	1.770 (45.0)	.625 (15.9)	.937 (23.8)	16
73*	24	2.061 (52.3)	2.625 (66.7)	1.375 (34.9)	2.113 (53.7)	.875 (22.2)	1.250 (31.8)	20
74	14	.812 (20.6)	2.125 (54.0)	1.027 (26.1)	.957 (24.3)	.125 (3.2)	.312 (7.9)	04
75	16	.906 (23.0)	2.235 (56.8)	1.027 (26.1)	.957 (24.3)	.125 (3.2)	.312 (7.9)	04

* Denotes Style 2

Dimensions in inches (millimeters) and are subject to change without notice.

© 2013 Glenair, Inc.
U.S. CAGE Code 06324
Printed in U.S.A.