Arria V Device Overview

2018.04.16

AV-51001

Subscribe Send Feedback

The Arria® V device family consists of the most comprehensive offerings of mid-range FPGAs ranging from the lowest power for 6 gigabits per second (Gbps) and 10 Gbps applications, to the highest mid-range FPGA bandwidth 12.5 Gbps transceivers.

The Arria V devices are ideal for power-sensitive wireless infrastructure equipment, 20G/40G bridging, switching, and packet processing applications, high-definition video processing and image manipulation, and intensive digital signal processing (DSP) applications.

Related Information

Arria V Device Handbook: Known Issues
Lists the planned updates to the Arria V Device Handbook chapters.

Key Advantages of Arria V Devices

Table 1: Key Advantages of the Arria V Device Family

Advantage	Supporting Feature
Lowest static power in its class	• Built on TSMC's 28 nm process technology and includes an abundance of hard intellectual property (IP) blocks • Power-optimized MultiTrack routing and core architecture • Up to 50% lower power consumption than the previous generation device • Lowest power transceivers of any midrange family
Improved logic integration and differentiation capabilities	• 8-input adaptive logic module (ALM) • Up to 38.38 megabits (Mb) of embedded memory • Variable-precision digital signal processing (DSP) blocks
Increased bandwidth capacity	• Serial data rates up to 12.5 Gbps • Hard memory controllers
Hard processor system (HPS) with integrated ARM® Cortex™-A9 MPCore processor	• Tight integration of a dual-core ARM Cortex-A9 MPCore processor, hard IP, and an FPGA in a single Arria V system-on-a-chip (SoC) • Supports over 128 Gbps peak bandwidth with integrated data coherency between the processor and the FPGA fabric

Intel Corporation. All rights reserved. Intel, the Intel logo, Altera, Arria, Cyclone, Enpirion, MAX, Nios, Quartus and Stratix words and logos are trademarks of Intel Corporation or its subsidiaries in the U.S. and/or other countries. Intel warrants performance of its FPGA and semiconductor products to current specifications in accordance with Intel's standard warranty, but reserves the right to make changes to any products and services at any time without notice. Intel assumes no responsibility or liability arising out of the application or use of any information, product, or service described herein except as expressly agreed to in writing by Intel. Intel customers are advised to obtain the latest version of device specifications before relying on any published information and before placing orders for products or services.
*Other names and brands may be claimed as the property of others.

ISO 9001:2015 Registered

Advantage	Supporting Feature
Lowest system cost	• Requires as few as four power supplies to operate • Available in thermal composite flip chip ball-grid array (BGA) packaging • Includes innovative features such as Configuration via Protocol (CvP), partial reconfiguration, and design security

Summary of Arria V Features

Table 2: Summary of Features for Arria V Devices

Feature	Description

Technology	• TSMC's 28-nm process technology:
	  • Arria V GX, GT, SX, and ST—28-nm low power (28LP) process
	  • Arria V GZ—28-nm high performance (28HP) process
	• Lowest static power in its class (less than 1.2 W for 500K logic elements (LEs) at 85°C junction under typical conditions)
	• 0.85 V, 1.1 V, or 1.15 V core nominal voltage

Packaging	• Thermal composite flip chip BGA packaging • Multiple device densities with identical package footprints for seamless migration between different device densities • Leaded[(1)], lead-free (Pb-free), and RoHS-compliant options
High-performance FPGA fabric	• Enhanced 8-input ALM with four registers • Improved routing architecture to reduce congestion and improve compilation time
Internal memory blocks	• M10K—10-kilobits (Kb) memory blocks with soft error correction code (ECC) (Arria V GX, GT, SX, and ST devices only) • M20K—20-Kb memory blocks with hard ECC (Arria V GZ devices only) • Memory logic array block (MLAB)-640-bit distributed LUTRAM where you can use up to 50% of the ALMs as MLAB memory

(1) Contact Intel for availability.

Feature	Description	

Embedded Hard IP blocks	Variable-precision DSP	• Native support for up to four signal processing precision levels:
		  • Three 9 x 9, two 18 x 18, or one 27 x 27 multiplier in the same variable-precision DSP block
		  • One 36 x 36 multiplier using two variable-precision DSP blocks (Arria V GZ devices only)
		• 64-bit accumulator and cascade for systolic finite impulse responses (FIRs)
		• Embedded internal coefficient memory
		• Preadder/subtractor for improved efficiency

	Memory controller (Arria V GX, GT, SX, and ST only)	DDR3 and DDR2

	Embedded transceiver I/O	• Custom implementation:
		  • Arria V GX and SX devices—up to 6.5536 Gbps
		  • Arria V GT and ST devices—up to 10.3125 Gbps
		  • Arria V GZ devices—up to 12.5 Gbps
		• PCI Express® (PCIe®) Gen2 (x1, x2, or x4) and Gen1 (x1, x2, x4, or x8) hard IP with multifunction support, endpoint, and root port
		• PCIe Gen3 (x1, x2, x4, or x8) support (Arria V GZ only)
		• Gbps Ethernet (GbE) and XAUI physical coding sublayer (PCS)
		• Common Public Radio Interface (CPRI) PCS
		• Gigabit-capable passive optical network (GPON) PCS
		• 10-Gbps Ethernet (10GbE) PCS (Arria V GZ only)
		• Serial RapidIO® (SRIO) PCS
		• Interlaken PCS (Arria V GZ only)

Clock networks	• Up to 650 MHz global clock network • Global, quadrant, and peripheral clock networks • Clock networks that are not used can be powered down to reduce dynamic power	
Phase-locked loops (PLLs)	• High-resolution fractional PLLs • Precision clock synthesis, clock delay compensation, and zero delay buffering (ZDB) • Integer mode and fractional mode • LC oscillator ATX transmitter PLLs (Arria V GZ only)	

Feature	Description
FPGA General-purpose I/Os (GPIOs)	• 1.6 Gbps LVDS receiver and transmitter • 800 MHz/1.6 Gbps external memory interface • On-chip termination (OCT) • 3.3 V support [(2)]
External Memory Interface	Memory interfaces with low latency: • Hard memory controller-up to 1.066 Gbps • Soft memory controller-up to 1.6 Gbps
Low-power high-speed serial interface	• 600 Mbps to 12.5 Gbps integrated transceiver speed • Less than 105 mW per channel at 6 Gbps, less than 165 mW per channel at 10 Gbps, and less than 170 mW per channel at 12.5 Gbps • Transmit pre-emphasis and receiver equalization • Dynamic partial reconfiguration of individual channels • Physical medium attachment (PMA) with soft PCS that supports 9.8304 Gbps CPRI (Arria V GT and ST only) • PMA with hard PCS that supports up to 9.8 Gbps CPRI (Arria V GZ only) • Hard PCS that supports 10GBASE-R and 10GBASE-KR (Arria V GZ only)
HPS (Arria V SX and ST devices only)	• Dual-core ARM Cortex-A9 MPCore processor—up to 1.05 GHz maximum frequency with support for symmetric and asymmetric multiprocessing • Interface peripherals—10/100/1000 Ethernet media access control (EMAC), USB 2.0 On-The-GO (OTG) controller, quad serial peripheral interface (QSPI) flash controller, NAND flash controller, Secure Digital/MultiMediaCard (SD/MMC) controller, UART, serial peripheral interface (SPI), I2C interface, and up to 85 HPS GPIO interfaces • System peripherals—general-purpose timers, watchdog timers, direct memory access (DMA) controller, FPGA configuration manager, and clock and reset managers • On-chip RAM and boot ROM • HPS–FPGA bridges—include the FPGA-to-HPS, HPS-to-FPGA, and lightweight HPS-to-FPGA bridges that allow the FPGA fabric to issue transactions to slaves in the HPS, and vice versa • FPGA-to-HPS SDRAM controller subsystem—provides a configurable interface to the multiport front end (MPFE) of the HPS SDRAM controller • ARM CoreSight™ JTAG debug access port, trace port, and on-chip trace storage

(2) Arria V GZ devices support 3.3 V with a 3.0 V V_{CCIO}.

Feature	Description
Configuration	• Tamper protection-comprehensive design protection to protect your valuable IP investments • Enhanced advanced encryption standard (AES) design security features • CvP • Partial and dynamic reconfiguration of the FPGA • Active serial (AS) x1 and x4, passive serial (PS), JTAG, and fast passive parallel (FPP) x8, x16, and x32 (Arria V GZ) configuration options • Remote system upgrade

Arria V Device Variants and Packages

Table 3: Device Variants for the Arria V Device Family

Variant	Description
Arria V GX	FPGA with integrated 6.5536 Gbps transceivers that provides bandwidth, cost, and power levels that are optimized for high-volume data and signal-processing applications
Arria V GT	FPGA with integrated 10.3125 Gbps transceivers that provides enhanced high-speed serial I/O bandwidth for cost-sensitive data and signal processing applications
Arria V GZ	FPGA with integrated 12.5 Gbps transceivers that provides enhanced high-speed serial I/O bandwidth for high-performance and cost-sensitive data and signal processing applications
Arria V SX	SoC with integrated ARM-based HPS and 6.5536 Gbps transceivers
Arria V ST	SoC with integrated ARM-based HPS and 10.3125 Gbps transceivers

Arria V GX

This section provides the available options, maximum resource counts, and package plan for the Arria V GX devices.

The information in this section is correct at the time of publication. For the latest information and to get more details, refer to the Product Selector.

Related Information

Product Selector
Provides the latest information about Intel products.

Available Options

Figure 1: Sample Ordering Code and Available Options for Arria V GX Devices

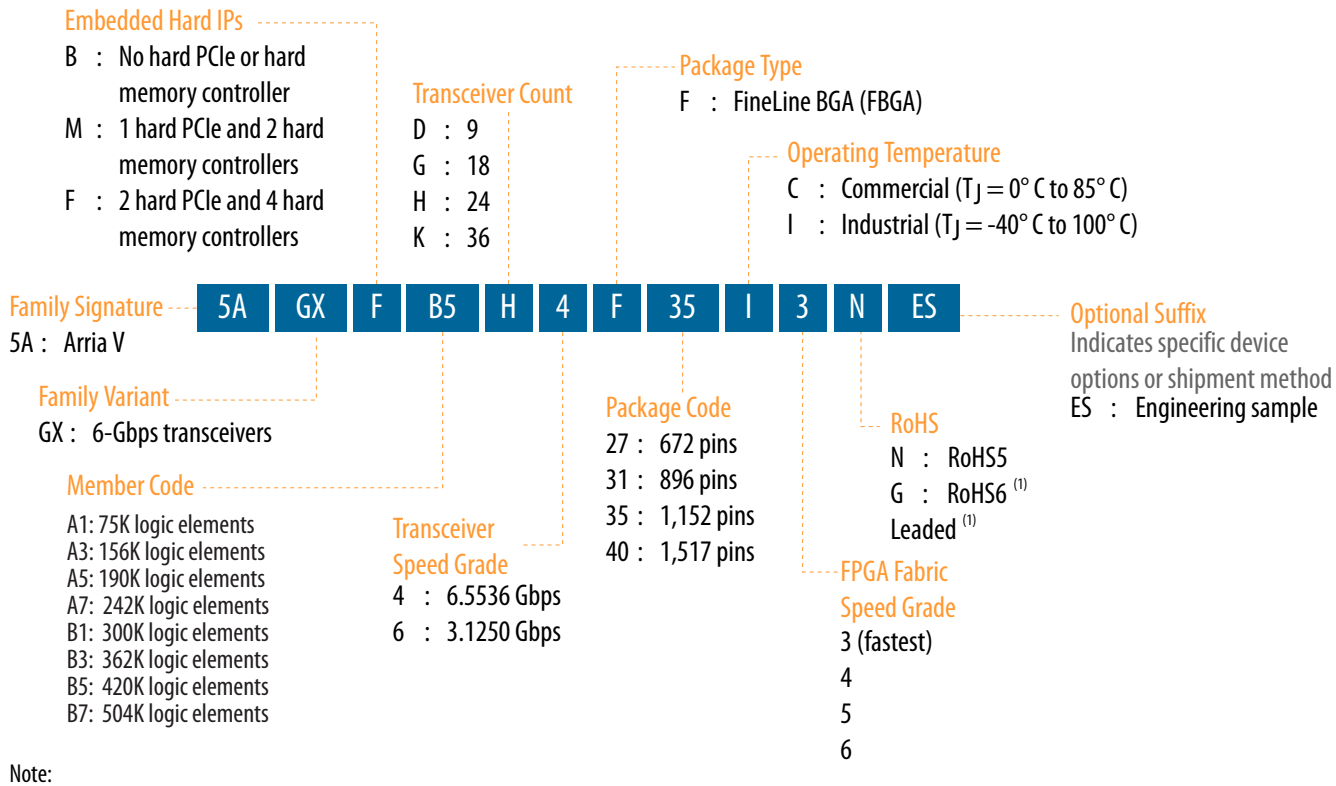

Note:
1. Contact Intel for availability.

Maximum Resources

Table 4: Maximum Resource Counts for Arria V GX Devices

Resource		Member Code							
		A1	A3	A5	A7	B1	B3	B5	B7
Logic Elements (LE) (K)		75	156	190	242	300	362	420	504
ALM		28,302	58,900	71,698	91,680	113,208	136,880	158,491	190,240
Register		113,208	235,600	286,792	366,720	452,832	547,520	633,964	760,960
Memory (Kb)	M10K	8,000	10,510	11,800	13,660	15,100	17,260	20,540	24,140
	MLAB	463	961	1,173	1,448	1,852	2,098	2,532	2,906
Variable-precision DSP Block		240	396	600	800	920	1,045	1,092	1,156

Resource		Member Code							
		A1	A3	A5	A7	B1	B3	B5	B7
18 x 18 Multiplier		480	792	1,200	1,600	1,840	2,090	2,184	2,312
PLL		10	10	12	12	12	12	16	16
6 Gbps Transceiver		9	9	24	24	24	24	36	36
GPIO(3)		416	416	544	544	704	704	704	704
LVDS	Transmitter	67	67	120	120	160	160	160	160
	Receiver	80	80	136	136	176	176	176	176
PCIe Hard IP Block		1	1	2	2	2	2	2	2
Hard Memory Controller		2	2	4	4	4	4	4	4

Related Information

High-Speed Differential I/O Interfaces and DPA in Arria V Devices chapter, Arria V Device Handbook
Provides the number of LVDS channels in each device package.

Package Plan

Table 5: Package Plan for Arria V GX Devices

Member Code	F672 (27 mm)		F896 (31 mm)		F1152 (35 mm)		F1517 (40 mm)	
	GPIO	XCVR	GPIO	XCVR	GPIO	XCVR	GPIO	XCVR
A1	336	9	416	9	—	—	—	—
A3	336	9	416	9	—	—	—	—
A5	336	9	384	18	544	24	—	—
A7	336	9	384	18	544	24	—	—
B1	—	—	384	18	544	24	704	24
B3	—	—	384	18	544	24	704	24
B5	—	—	—	—	544	24	704	36
B7	—	—	—	—	544	24	704	36

(3) The number of GPIOs does not include transceiver I/Os. In the Intel® Quartus® Prime software, the number of user I/Os includes transceiver I/Os.

Arria V GT

This section provides the available options, maximum resource counts, and package plan for the Arria V GT devices.

The information in this section is correct at the time of publication. For the latest information and to get more details, refer to the Product Selector.

Related Information

Product Selector
Provides the latest information about Intel products.

Available Options

Figure 2: Sample Ordering Code and Available Options for Arria V GT Devices

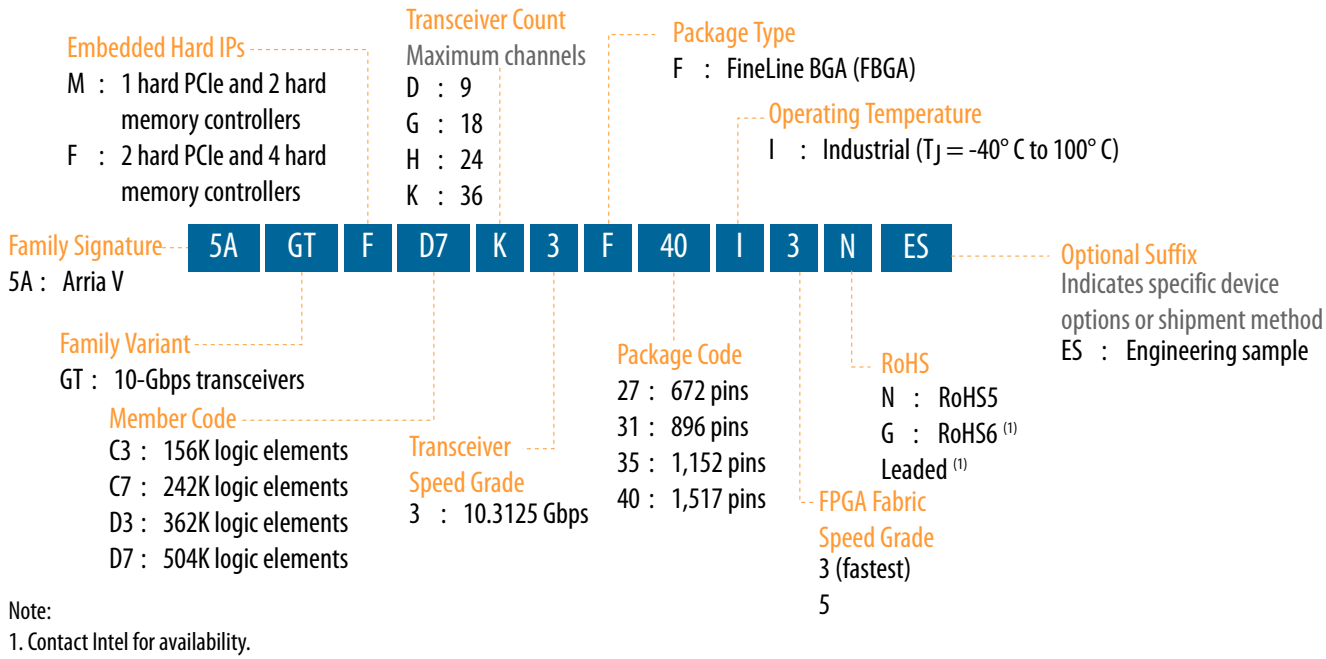

Note:
1. Contact Intel for availability.

Maximum Resources

Table 6: Maximum Resource Counts for Arria V GT Devices

Resource		Member Code			
		C3	C7	D3	D7
Logic Elements (LE) (K)		156	242	362	504
ALM		58,900	91,680	136,880	190,240
Register		235,600	366,720	547,520	760,960
Memory (Kb)	M10K	10,510	13,660	17,260	24,140
	MLAB	961	1,448	2,098	2,906

Resource		Member Code			
		C3	C7	D3	D7
Variable-precision DSP Block		396	800	1,045	1,156
18 x 18 Multiplier		792	1,600	2,090	2,312
PLL		10	12	12	16
Transceiver	6 Gbps[4]	3 (9)	6 (24)	6 (24)	6 (36)
	10 Gbps[5]	4	12	12	20
GPIO[6]		416	544	704	704
LVDS	Transmitter	68	120	160	160
	Receiver	80	136	176	176
PCIe Hard IP Block		1	2	2	2
Hard Memory Controller		2	4	4	4

Related Information

- **High-Speed Differential I/O Interfaces and DPA in Arria V Devices chapter, Arria V Device Handbook**
  Provides the number of LVDS channels in each device package.
- **Transceiver Architecture in Arria V Devices**
  Describes 10 Gbps channels usage conditions and SFF-8431 compliance requirements.

Package Plan

Table 7: Package Plan for Arria V GT Devices

Member Code	F672 (27 mm)			F896 (31 mm)			F1152 (35 mm)			F1517 (40 mm)		
	GPIO	XCVR		GPIO	XCVR		GPIO	XCVR		GPIO	XCVR	
		6-Gbps	10-Gbps		6-Gbps	10-Gbps		6-Gbps	10-Gbps		6-Gbps	10-Gbps
C3	336	3 (9)	4	416	3 (9)	4	—	—	—	—	—	—
C7	—	—	—	384	6 (18)	8	544	6 (24)	12	—	—	—
D3	—	—	—	384	6 (18)	8	544	6 (24)	12	704	6 (24)	12

(4) The 6 Gbps transceiver counts are for dedicated 6-Gbps channels. You can also configure any pair of 10 Gbps channels as three 6 Gbps channels-the total number of 6 Gbps channels are shown in brackets.
(5) Chip-to-chip connections only. For 10 Gbps channel usage conditions, refer to the Transceiver Architecture in Arria V Devices chapter.
(6) The number of GPIOs does not include transceiver I/Os. In the Intel Quartus Prime software, the number of user I/Os includes transceiver I/Os.

Member Code	F672 (27 mm)			F896 (31 mm)			F1152 (35 mm)			F1517 (40 mm)		
	GPIO	XCVR		GPIO	XCVR		GPIO	XCVR		GPIO	XCVR	
		6-Gbps	10-Gbps		6-Gbps	10-Gbps		6-Gbps	10-Gbps		6-Gbps	10-Gbps
D7	—	—	—	—	—	—	544	6 (24)	12	704	6 (36)	20

The 6-Gbps transceiver counts are for dedicated 6-Gbps channels. You can also configure any pair of 10-Gbps channels as three 6-Gbps channels—the total number of 6-Gbps channels are shown in brackets. For example, you can also configure the Arria V GT D7 device in the F1517 package with nine 6-Gbps and eighteen 10-Gbps, twelve 6-Gbps and sixteen 10-Gbps, fifteen 6-Gbps and fourteen 10-Gbps, or up to thirty-six 6-Gbps with no 10-Gbps channels.

Arria V GZ

This section provides the available options, maximum resource counts, and package plan for the Arria V GZ devices.

The information in this section is correct at the time of publication. For the latest information and to get more details, refer to the Product Selector.

Related Information

Product Selector
Provides the latest information about Intel products.

Available Options

Figure 3: Sample Ordering Code and Available Options for Arria V GZ Devices

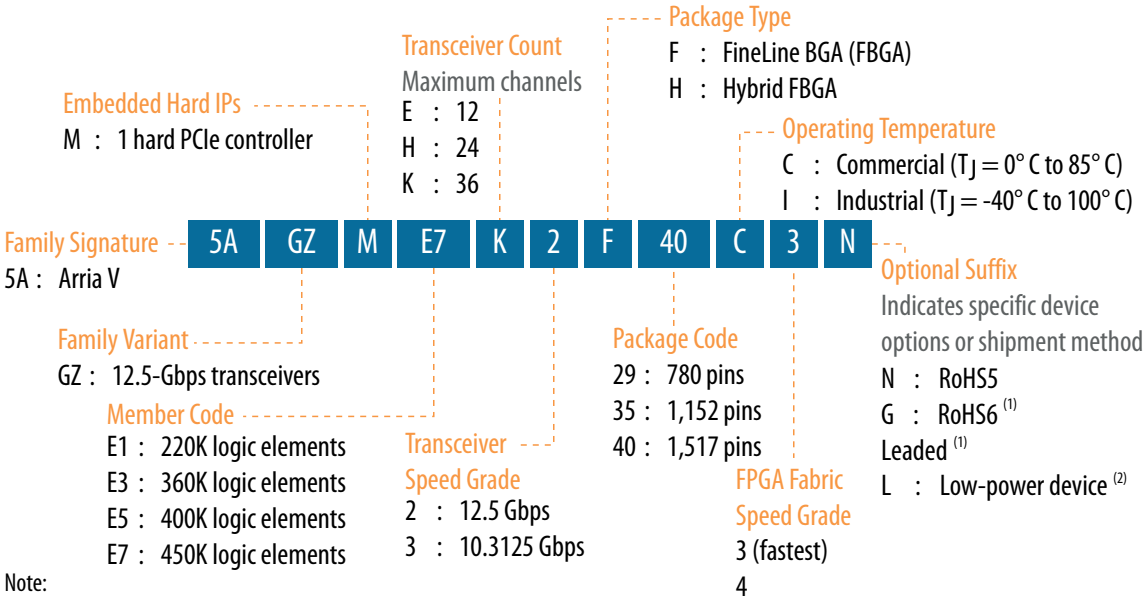

Note:
1. Contact Intel for availability.
2. Low-power device option is available only for –3 speed grade at industrial temperature.

Maximum Resources

Table 8: Maximum Resource Counts for Arria V GZ Devices

Resource		Member Code			
		E1	E3	E5	E7
Logic Elements (LE) (K)		220	360	400	450
ALM		83,020	135,840	150,960	169,800
Register		332,080	543,360	603,840	679,200
Memory (Kb)	M20K	11,700	19,140	28,800	34,000
	MLAB	2,594	4,245	4,718	5,306
Variable-precision DSP Block		800	1,044	1,092	1,139
18 x 18 Multiplier		1,600	2,088	2,184	2,278
PLL		20	20	24	24
12.5 Gbps Transceiver		24	24	36	36
GPIO(7)		414	414	674	674

(7) The number of GPIOs does not include transceiver I/Os. In the Intel Quartus Prime software, the number of user I/Os includes transceiver I/Os.

Resource		Member Code			
		E1	E3	E5	E7
LVDS	Transmitter	99	99	166	166
	Receiver	108	108	168	168
PCIe Hard IP Block		1	1	1	1

Related Information

High-Speed Differential I/O Interfaces and DPA in Arria V Devices chapter, Arria V Device Handbook
Provides the number of LVDS channels in each device package.

Package Plan

Table 9: Package Plan for Arria V GZ Devices

Member Code	H780 (33 mm)		F1152 (35 mm)		F1517 (40 mm)	
	GPIO	XCVR	GPIO	XCVR	GPIO	XCVR
E1	342	12	414	24	—	—
E3	342	12	414	24	—	—
E5	—	—	534	24	674	36
E7	—	—	534	24	674	36

Arria V SX

This section provides the available options, maximum resource counts, and package plan for the Arria V SX devices.

The information in this section is correct at the time of publication. For the latest information and to get more details, refer to the Product Selector.

Related Information

Product Selector
Provides the latest information about Intel products.

Available Options

Figure 4: Sample Ordering Code and Available Options for Arria V SX Devices

The –3 FPGA fabric speed grade is available only for industrial temperature devices.

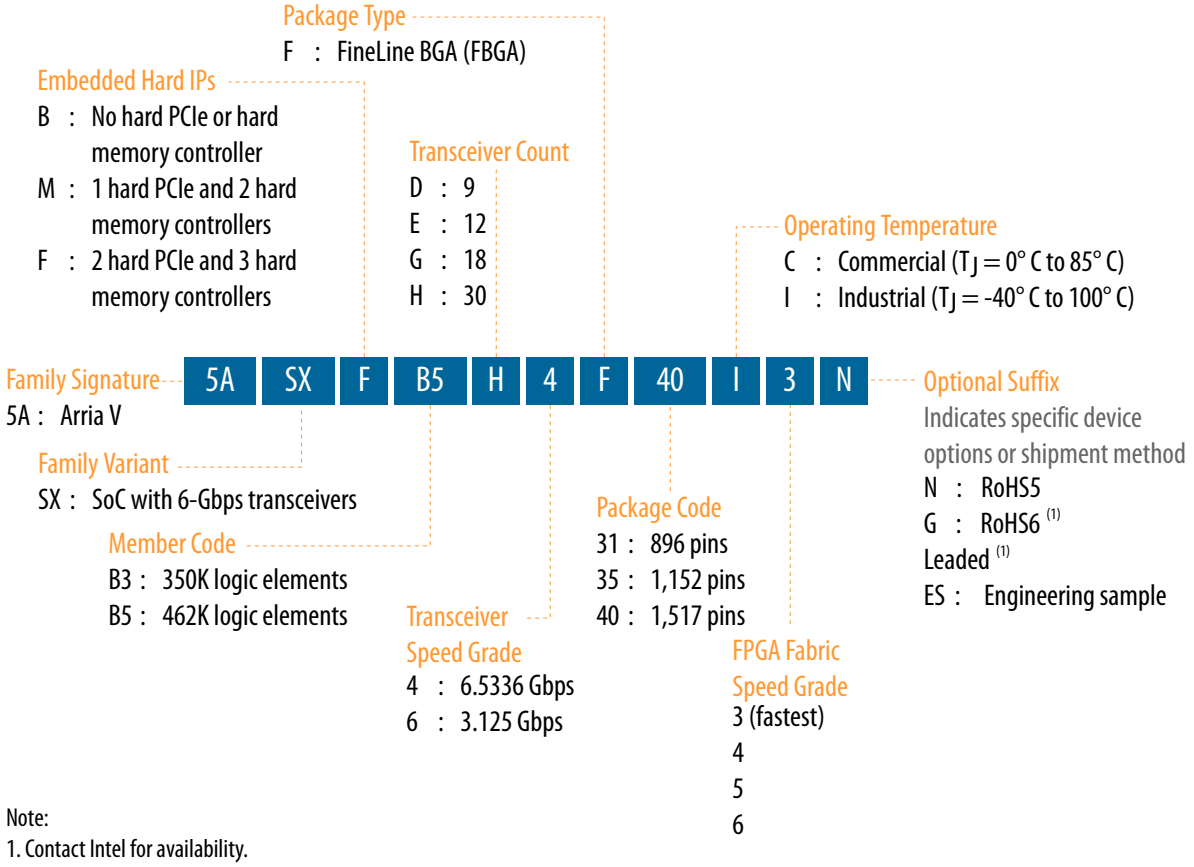

Note:
1. Contact Intel for availability.

Maximum Resources

Table 10: Maximum Resource Counts for Arria V SX Devices

Resource		Member Code	
		B3	B5
Logic Elements (LE) (K)		350	462
ALM		132,075	174,340
Register		528,300	697,360
Memory (Kb)	M10K	17,290	22,820
	MLAB	2,014	2,658
Variable-precision DSP Block		809	1,090
18 x 18 Multiplier		1,618	2,180

Resource		Member Code	
		B3	B5
FPGA PLL		14	14
HPS PLL		3	3
6 Gbps Transceiver		30	30
FPGA GPIO[8]		540	540
HPS I/O		208	208
LVDS	Transmitter	120	120
	Receiver	136	136
PCIe Hard IP Block		2	2
FPGA Hard Memory Controller		3	3
HPS Hard Memory Controller		1	1
ARM Cortex-A9 MPCore Processor		Dual-core	Dual-core

Related Information

High-Speed Differential I/O Interfaces and DPA in Arria V Devices chapter, Arria V Device Handbook
Provides the number of LVDS channels in each device package.

Package Plan

Table 11: Package Plan for Arria V SX Devices

The HPS I/O counts are the number of I/Os in the HPS and does not correlate with the number of HPS-specific I/O pins in the FPGA. Each HPS-specific pin in the FPGA may be mapped to several HPS I/Os.

Member Code	F896 (31 mm)			F1152 (35 mm)			F1517 (40 mm)		
	FPGA GPIO	HPS I/O	XCVR	FPGA GPIO	HPS I/O	XCVR	FPGA GPIO	HPS I/O	XCVR
B3	250	208	12	385	208	18	540	208	30
B5	250	208	12	385	208	18	540	208	30

Arria V ST

This section provides the available options, maximum resource counts, and package plan for the Arria V ST devices.

[8] The number of GPIOs does not include transceiver I/Os. In the Intel Quartus Prime software, the number of user I/Os includes transceiver I/Os.

The information in this section is correct at the time of publication. For the latest information and to get more details, refer to the Product Selector.

Related Information

Product Selector
Provides the latest information about Intel products.

Available Options

Figure 5: Sample Ordering Code and Available Options for Arria V ST Devices

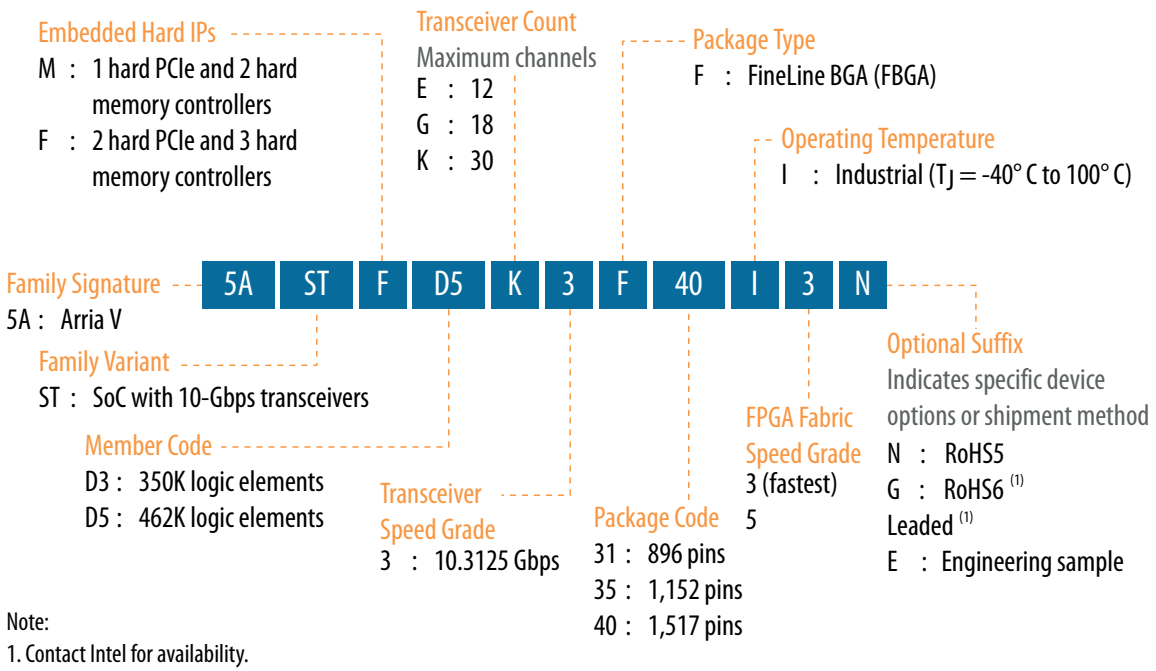

Maximum Resources

Table 12: Maximum Resource Counts for Arria V ST Devices

Resource		Member Code	
		D3	D5
Logic Elements (LE) (K)		350	462
ALM		132,075	174,340
Register		528,300	697,360
Memory (Kb)	M10K	17,290	22,820
	MLAB	2,014	2,658
Variable-precision DSP Block		809	1,090
18 x 18 Multiplier		1,618	2,180

Resource		Member Code	
		D3	D5
FPGA PLL		14	14
HPS PLL		3	3
Transceiver	6-Gbps	30	30
	10-Gbps[9]	16	16
FPGA GPIO[10]		540	540
HPS I/O		208	208
LVDS	Transmitter	120	120
	Receiver	136	136
PCIe Hard IP Block		2	2
FPGA Hard Memory Controller		3	3
HPS Hard Memory Controller		1	1
ARM Cortex-A9 MPCore Processor		Dual-core	Dual-core

Related Information

- **High-Speed Differential I/O Interfaces and DPA in Arria V Devices chapter, Arria V Device Handbook**
  Provides the number of LVDS channels in each device package.
- **Transceiver Architecture in Arria V Devices**
  Describes 10 Gbps channels usage conditions and SFF-8431 compliance requirements.

Package Plan

Table 13: Package Plan for Arria V ST Devices

The HPS I/O counts are the number of I/Os in the HPS and does not correlate with the number of HPS-specific I/O pins in the FPGA. Each HPS-specific pin in the FPGA may be mapped to several HPS I/Os.

Member Code	F896 (31 mm)				F1152 (35 mm)				F1517 (40 mm)			
	FPGA GPIO	HPS I/O	XCVR		FPGA GPIO	HPS I/O	XCVR		FPGA GPIO	HPS I/O	XCVR	
			6 Gbps	10 Gbps			6 Gbps	10 Gbps			6 Gbps	10 Gbps
D3	250	208	12	6	385	208	18	8	540	208	30	16
D5	250	208	12	6	385	208	18	8	540	208	30	16

(9) Chip-to-chip connections only. For 10 Gbps channel usage conditions, refer to the Transceiver Architecture in Arria V Devices chapter.

(10) The number of GPIOs does not include transceiver I/Os. In the Intel Quartus Prime software, the number of user I/Os includes transceiver I/Os.

I/O Vertical Migration for Arria V Devices

Figure 6: Vertical Migration Capability Across Arria V Device Packages and Densities

The arrows indicate the vertical migration paths. Some packages have several migration paths. The devices included in each vertical migration path are shaded. You can also migrate your design across device densities in the same package option if the devices have the same dedicated pins, configuration pins, and power pins.

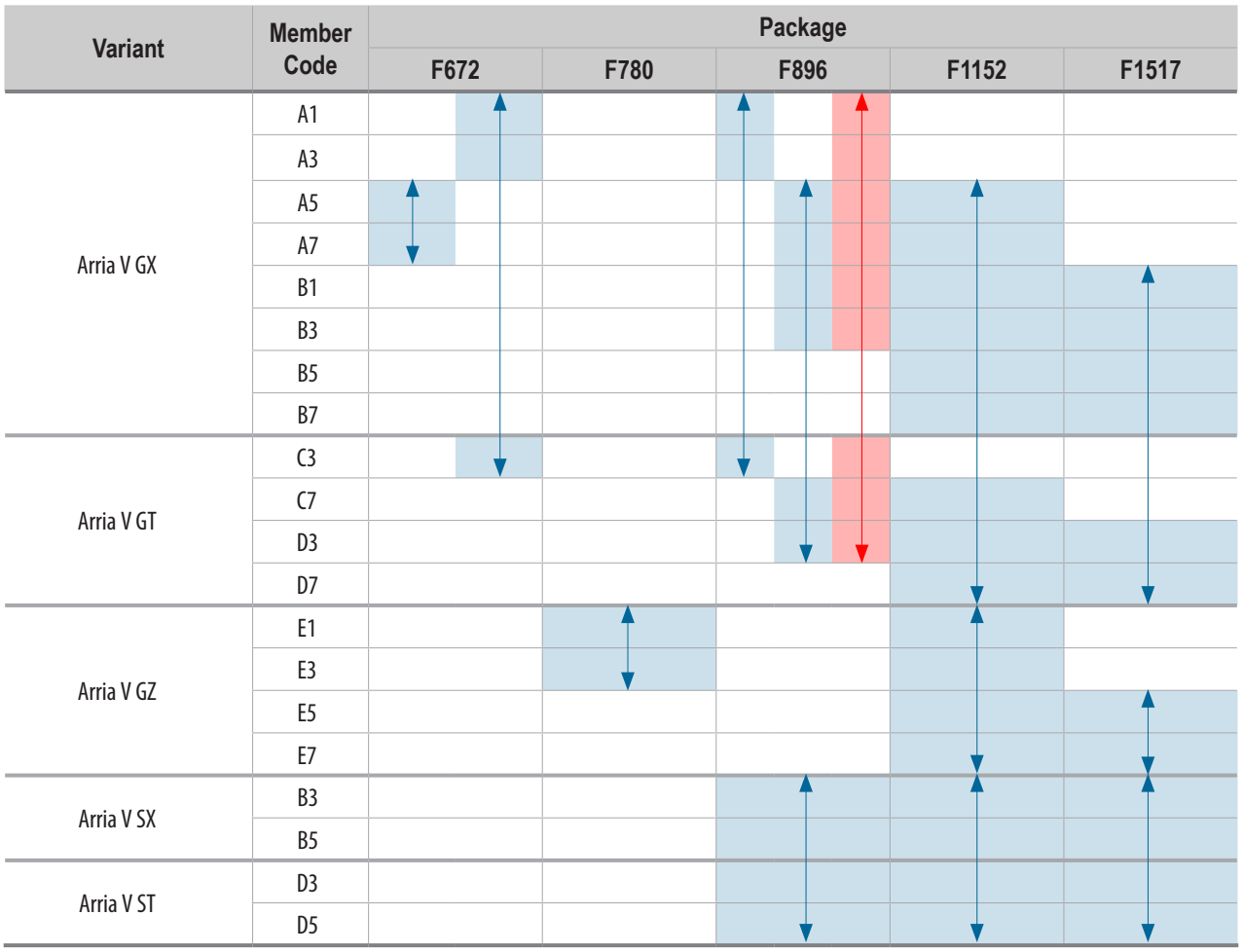

You can achieve the vertical migration shaded in red if you use only up to 320 GPIOs, up to nine 6 Gbps transceiver channels, and up to four 10 Gbps transceiver (for Arria V GT devices). This migration path is not shown in the Intel Quartus Prime software Pin Migration View.

Note: To verify the pin migration compatibility, use the Pin Migration View window in the Intel Quartus Prime software Pin Planner.

Note: Except for Arria V GX A5 and A7, and Arria V GT C7 devices, all other Arria V GX and GT devices require a specific power-up sequence. If you plan to migrate your design from Arria V GX A5 and A7, and Arria V GT C7 devices to other Arria V devices, your design must adhere to the same required power-up sequence.

Related Information

- **Managing Device I/O Pins chapter, Quartus Prime Handbook**
  Provides more information about vertical I/O migrations.
- **Power Management in Arria V Devices**
  Describes the power-up sequence required for Arria V GX and GT devices.

Adaptive Logic Module

Arria V devices use a 28 nm ALM as the basic building block of the logic fabric.

The ALM, as shown in following figure, uses an 8-input fracturable look-up table (LUT) with four dedicated registers to help improve timing closure in register-rich designs and achieve an even higher design packing capability than previous generations.

Figure 7: ALM for Arria V Devices

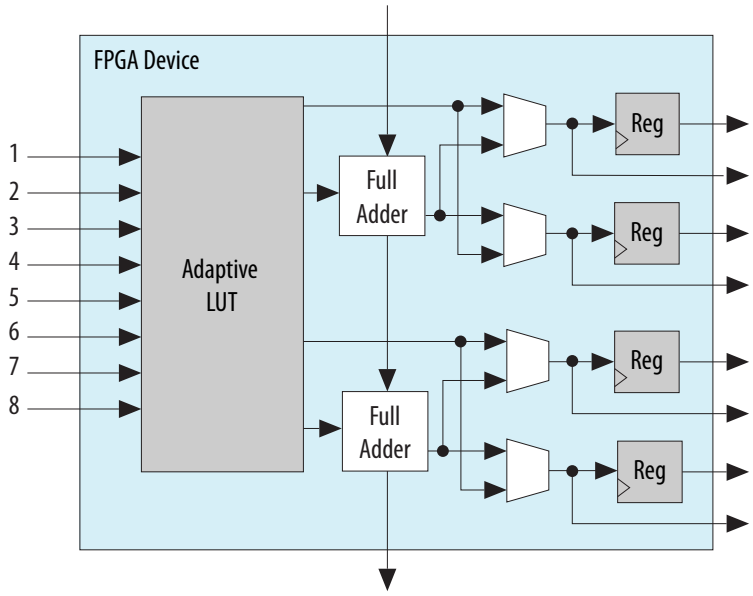

You can configure up to 50% of the ALMs in the Arria V devices as distributed memory using MLABs.

Related Information

Embedded Memory Capacity in Arria V Devices on page 21
Lists the embedded memory capacity for each device.

Variable-Precision DSP Block

Arria V devices feature a variable-precision DSP block that supports these features:

- Configurable to support signal processing precisions ranging from 9 x 9, 18 x 18, 27 x 27, and 36 x 36 bits natively
- A 64-bit accumulator
- Double accumulator
- A hard preadder that is available in both 18- and 27-bit modes
- Cascaded output adders for efficient systolic finite impulse response (FIR) filters
- Dynamic coefficients
- 18-bit internal coefficient register banks
- Enhanced independent multiplier operation
- Efficient support for single-precision floating point arithmetic
- The inferability of all modes by the Intel Quartus Prime design software

Table 14: Variable-Precision DSP Block Configurations for Arria V Devices

Usage Example	Multiplier Size (Bit)	DSP Block Resource
Low precision fixed point for video applications	Three 9 x 9	1
Medium precision fixed point in FIR filters	Two 18 x 18	1
FIR filters	Two 18 x 18 with accumulate	1
Single-precision floating-point implementations	One 27 x 27	1
Very high precision fixed point implementations	One 36 x 36	2

You can configure each DSP block during compilation as independent three 9 x 9, two 18 x 18, or one 27 x 27 multipliers. Using two DSP block resources, you can also configure a 36 x 36 multiplier for high-precision applications. With a dedicated 64 bit cascade bus, you can cascade multiple variable-precision DSP blocks to implement even higher precision DSP functions efficiently.

Table 15: Number of Multipliers in Arria V Devices

The table lists the variable-precision DSP resources by bit precision for each Arria V device.

Variant	Member Code	Variable-precision DSP Block	Independent Input and Output Multiplications Operator				18 x 18 Multiplier Adder Mode	18 x 18 Multiplier Adder Summed with 36 bit Input
			9 x 9 Multiplier	18 x 18 Multiplier	27 x 27 Multiplier	36 x 36 Multiplier		
Arria V GX	A1	240	720	480	240	—	240	240
	A3	396	1,188	792	396	—	396	396
	A5	600	1,800	1,200	600	—	600	600
	A7	800	2,400	1,600	800	—	800	800
	B1	920	2,760	1,840	920	—	920	920
	B3	1,045	3,135	2,090	1,045	—	1,045	1,045
	B5	1,092	3,276	2,184	1,092	—	1,092	1,092
	B7	1,156	3,468	2,312	1,156	—	1,156	1,156
Arria V GT	C3	396	1,188	792	396	—	396	396
	C7	800	2,400	1,600	800	—	800	800
	D3	1,045	3,135	2,090	1,045	—	1,045	1,045
	D7	1,156	3,468	2,312	1,156	—	1,156	1,156
Arria V GZ	E1	800	2,400	1,600	800	400	800	800
	E3	1,044	3,132	2,088	1,044	522	1,044	1,044
	E5	1,092	3,276	2,184	1,092	546	1,092	1,092
	E7	1,139	3,417	2,278	1,139	569	1,139	1,139
Arria V SX	B3	809	2,427	1,618	809	—	809	809
	B5	1,090	3,270	2,180	1,090	—	1,090	1,090
Arria V ST	D3	809	2,427	1,618	809	—	809	809
	D5	1,090	3,270	2,180	1,090	—	1,090	1,090

Embedded Memory Blocks

The embedded memory blocks in the devices are flexible and designed to provide an optimal amount of small- and large-sized memory arrays to fit your design requirements.

Types of Embedded Memory

The Arria V devices contain two types of memory blocks:

- 20 Kb M20K or 10 Kb M10K blocks—blocks of dedicated memory resources. The M20K and M10K blocks are ideal for larger memory arrays while still providing a large number of independent ports.
- 640 bit memory logic array blocks (MLABs)—enhanced memory blocks that are configured from dual-purpose logic array blocks (LABs). The MLABs are ideal for wide and shallow memory arrays. The MLABs are optimized for implementation of shift registers for digital signal processing (DSP) applications, wide shallow FIFO buffers, and filter delay lines. Each MLAB is made up of ten adaptive logic modules (ALMs). In the Arria V devices, you can configure these ALMs as ten 32 x 2 blocks, giving you one 32 x 20 simple dual-port SRAM block per MLAB. You can also configure these ALMs, in Arria V GZ devices, as ten 64 x 1 blocks, giving you one 64 x 10 simple dual-port SRAM block per MLAB.

Embedded Memory Capacity in Arria V Devices

Table 16: Embedded Memory Capacity and Distribution in Arria V Devices

Variant	Member Code	M20K		M10K		MLAB		Total RAM Bit (Kb)
		Block	RAM Bit (Kb)	Block	RAM Bit (Kb)	Block	RAM Bit (Kb)	
Arria V GX	A1	—	—	800	8,000	741	463	8,463
	A3	—	—	1,051	10,510	1538	961	11,471
	A5	—	—	1,180	11,800	1877	1,173	12,973
	A7	—	—	1,366	13,660	2317	1,448	15,108
	B1	—	—	1,510	15,100	2964	1,852	16,952
	B3	—	—	1,726	17,260	3357	2,098	19,358
	B5	—	—	2,054	20,540	4052	2,532	23,072
	B7	—	—	2,414	24,140	4650	2,906	27,046
Arria V GT	C3	—	—	1,051	10,510	1538	961	11,471
	C7	—	—	1,366	13,660	2317	1,448	15,108
	D3	—	—	1,726	17,260	3357	2,098	19,358
	D7	—	—	2,414	24,140	4650	2,906	27,046
Arria V GZ	E1	585	11,700	—	—	4,151	2,594	14,294
	E3	957	19,140	—	—	6,792	4,245	23,385
	E5	1,440	28,800	—	—	7,548	4,718	33,518
	E7	1,700	34,000	—	—	8,490	5,306	39,306
Arria V SX	B3	—	—	1,729	17,290	3223	2,014	19,304
	B5	—	—	2,282	22,820	4253	2,658	25,478

Variant	Member Code	M20K		M10K		MLAB		Total RAM Bit (Kb)
		Block	RAM Bit (Kb)	Block	RAM Bit (Kb)	Block	RAM Bit (Kb)	
Arria V ST	D3	—	—	1,729	17,290	3223	2,014	19,304
	D5	—	—	2,282	22,820	4253	2,658	25,478

Embedded Memory Configurations

Table 17: Supported Embedded Memory Block Configurations for Arria V Devices

This table lists the maximum configurations supported for the embedded memory blocks. The information is applicable only to the single-port RAM and ROM modes.

Memory Block	Depth (bits)	Programmable Width
MLAB	32	x16, x18, or x20
	64[11]	x10
M20K	512	x40
	1K	x20
	2K	x10
	4K	x5
	8K	x2
	16K	x1
M10K	256	x40 or x32
	512	x20 or x16
	1K	x10 or x8
	2K	x5 or x4
	4K	x2
	8K	x1

Clock Networks and PLL Clock Sources

650 MHz Arria V devices have 16 global clock networks capable of up to operation. The clock network architecture is based on Intel's global, quadrant, and peripheral clock structure. This clock structure is supported by dedicated clock input pins and fractional PLLs.

Note: To reduce power consumption, the Intel Quartus Prime software identifies all unused sections of the clock network and powers them down.

(11) Available for Arria V GZ devices only.

PLL Features

The PLLs in the Arria V devices support the following features:

- Frequency synthesis
- On-chip clock deskew
- Jitter attenuation
- Counter reconfiguration
- Programmable output clock duty cycles
- PLL cascading
- Reference clock switchover
- Programmable bandwidth
- Dynamic phase shift
- Zero delay buffers

Fractional PLL

In addition to integer PLLs, the Arria V devices use a fractional PLL architecture. The devices have up to 16 PLLs, each with 18 output counters. One fractional PLL can use up to 18 output counters and two adjacent fractional PLLs share the 18 output counters. You can use the output counters to reduce PLL usage in two ways:

- Reduce the number of oscillators that are required on your board by using fractional PLLs
- Reduce the number of clock pins that are used in the device by synthesizing multiple clock frequencies from a single reference clock source

If you use the fractional PLL mode, you can use the PLLs for precision fractional-N frequency synthesis—removing the need for off-chip reference clock sources in your design.

The transceiver fractional PLLs that are not used by the transceiver I/Os can be used as general purpose fractional PLLs by the FPGA fabric.

FPGA General Purpose I/O

Arria V devices offer highly configurable GPIOs. The following list describes the features of the GPIOs:

- Programmable bus hold and weak pull-up
- LVDS output buffer with programmable differential output voltage (V_{OD}) and programmable pre-emphasis
- On-chip parallel termination (R_T OCT) for all I/O banks with OCT calibration to limit the termination impedance variation
- On-chip dynamic termination that has the ability to swap between series and parallel termination, depending on whether there is read or write on a common bus for signal integrity
- Unused voltage reference (`VREF`) pins that can be configured as user I/Os (Arria V GX, GT, SX, and ST only)
- Easy timing closure support using the hard read FIFO in the input register path, and delay-locked loop (DLL) delay chain with fine and coarse architecture

PCIe Gen1, Gen2, and Gen 3 Hard IP

Arria V devices contain PCIe hard IP that is designed for performance and ease-of-use. The PCIe hard IP consists of the MAC, data link, and transaction layers.

The PCIe hard IP supports PCIe Gen3, Gen 2, and Gen 1 end point and root port for up to x8 lane configuration.

The PCIe endpoint support includes multifunction support for up to eight functions, as shown in the following figure. The integrated multifunction support reduces the FPGA logic requirements by up to 20,000 LEs for PCIe designs that require multiple peripherals.

Figure 8: PCIe Multifunction for Arria V Devices

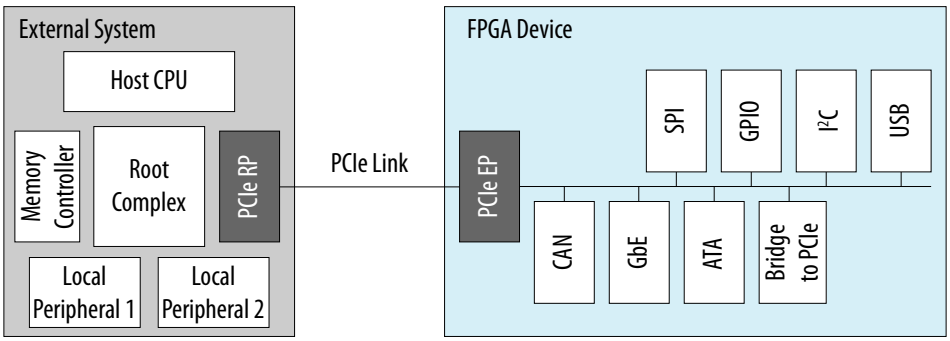

The Arria V PCIe hard IP operates independently from the core logic. This independent operation allows the PCIe link to wake up and complete link training in less than 100 ms while the Arria V device completes loading the programming file for the rest of the device.

In addition, the PCIe hard IP in the Arria V device provides improved end-to-end datapath protection using ECC.

External Memory Interface

This section provides an overview of the external memory interface in Arria V devices.

Hard and Soft Memory Controllers

Arria V GX,GT, SX, and ST devices support up to four hard memory controllers for DDR3 and DDR2 SDRAM devices. Each controller supports 8 to 32 bit components of up to 4 gigabits (Gb) in density with two chip selects and optional ECC. For the Arria V SoC devices, an additional hard memory controller in the HPS supports DDR3, DDR2, and LPDDR2 SDRAM devices.

All Arria V devices support soft memory controllers for DDR3, DDR2, and LPDDR2 SDRAM devices, QDR II+, QDR II, and DDR II+ SRAM devices, and RLDRAM II devices for maximum flexibility.

Note: DDR3 SDRAM leveling is supported only in Arria V GZ devices.

External Memory Performance

Table 18: External Memory Interface Performance in Arria V Devices

Interface	Voltage (V)	Hard Controller (MHz)	Soft Controller (MHz)	
		Arria V GX, GT, SX, and ST	Arria V GX, GT, SX, and ST	Arria V GZ
DDR3 SDRAM	1.5	533	667	800
	1.35	533	600	800
DDR2 SDRAM	1.8	400	400	400
LPDDR2 SDRAM	1.2	—	400	—
RLDRAM 3	1.2	—	—	667
RLDRAM II	1.8	—	400	533
	1.5	—	400	533
QDR II+ SRAM	1.8	—	400	500
	1.5	—	400	500
QDR II SRAM	1.8	—	400	333
	1.5	—	400	333
DDR II+ SRAM(12)	1.8	—	400	—
	1.5	—	400	—

Related Information

External Memory Interface Spec Estimator

For the latest information and to estimate the external memory system performance specification, use Intel's External Memory Interface Spec Estimator tool.

HPS External Memory Performance

Table 19: HPS External Memory Interface Performance

The hard processor system (HPS) is available in Arria V SoC devices only.

Interface	Voltage (V)	HPS Hard Controller (MHz)
DDR3 SDRAM	1.5	533
	1.35	533
LPDDR2 SDRAM	1.2	333

(12) Not available as Intel IP.

Related Information

External Memory Interface Spec Estimator

For the latest information and to estimate the external memory system performance specification, use Intel's External Memory Interface Spec Estimator tool.

Low-Power Serial Transceivers

Arria V devices deliver the industry's lowest power consumption per transceiver channel:

- 12.5 Gbps transceivers at less than 170 mW
- 10 Gbps transceivers at less than 165 mW
- 6 Gbps transceivers at less than 105 mW

Arria V transceivers are designed to be compliant with a wide range of protocols and data rates.

Transceiver Channels

The transceivers are positioned on the left and right outer edges of the device. The transceiver channels consist of the physical medium attachment (PMA), physical coding sublayer (PCS), and clock networks.

The following figures are graphical representations of a top view of the silicon die, which corresponds to a reverse view for flip chip packages. Different Arria V devices may have different floorplans than the ones shown in the figures.

Figure 9: Device Chip Overview for Arria V GX and GT Devices

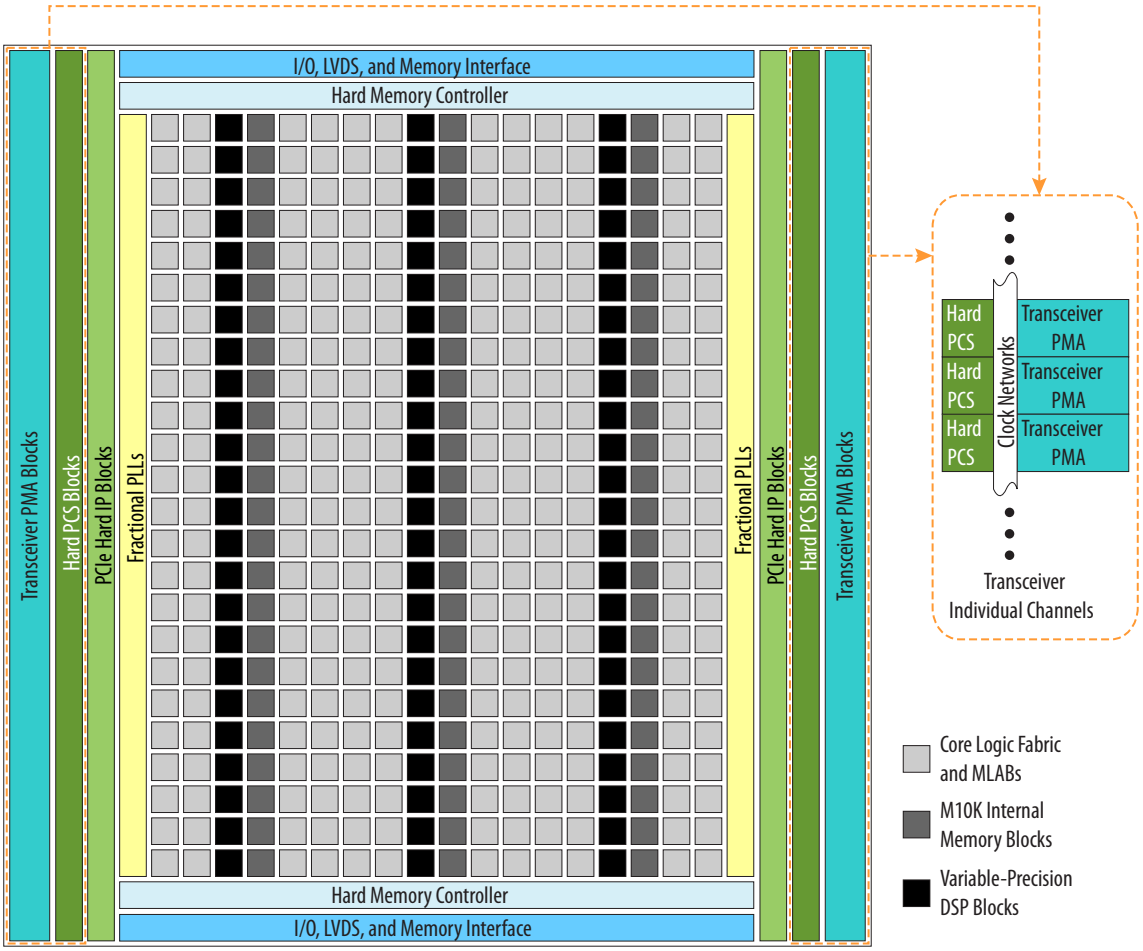

Figure 10: Device Chip Overview for Arria V GZ Devices

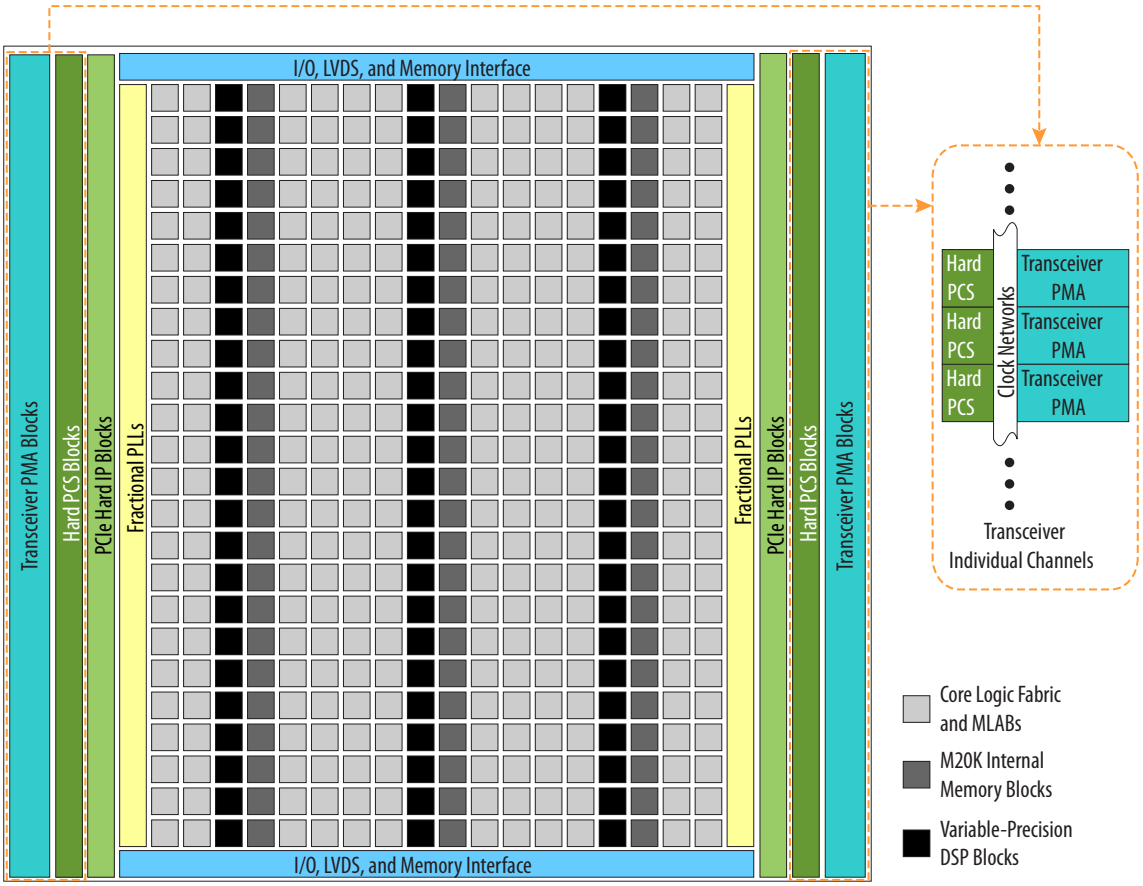

Figure 11: Device Chip Overview for Arria V SX and ST Devices

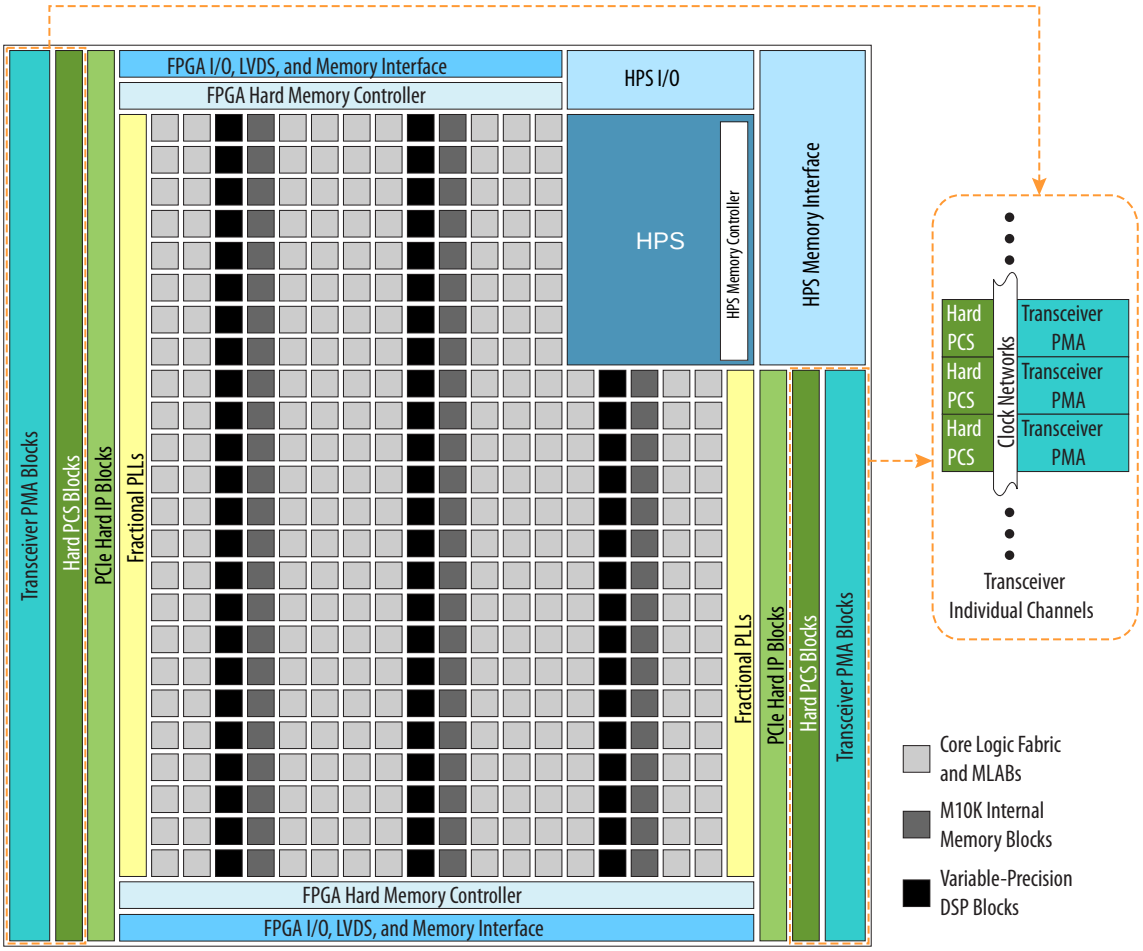

PMA Features

To prevent core and I/O noise from coupling into the transceivers, the PMA block is isolated from the rest of the chip—ensuring optimal signal integrity. For the transceivers, you can use the channel PLL of an unused receiver PMA as an additional transmit PLL.

Table 20: PMA Features of the Transceivers in Arria V Devices

Features	Capability
Backplane support	• Arria V GX, GT, SX, and ST devices—Driving capability at 6.5536 Gbps with up to 25 dB channel loss • Arria V GZ devices—Driving capability at 12.5 Gbps with up to 16 dB channel loss
Chip-to-chip support	• Arria V GX, GT, SX, and ST devices—Up to 10.3125 Gbps • Arria V GZ devices—Up to 12.5 Gbps

Features	Capability
PLL-based clock recovery	Superior jitter tolerance
Programmable serializer and deserializer (SERDES)	Flexible SERDES width
Equalization and pre-emphasis	• Arria V GX, GT, SX, and ST devices—Up to 14.37 dB of pre-emphasis and up to 4.7 dB of equalization • Arria V GZ devices—4-tap pre-emphasis and de-emphasis
Ring oscillator transmit PLLs	611 Mbps to 10.3125 Gbps
LC oscillator ATX transmit PLLs (Arria V GZ devices only)	600 Mbps to 12.5 Gbps
Input reference clock range	27 MHz to 710 MHz
Transceiver dynamic reconfiguration	Allows the reconfiguration of a single channel without affecting the operation of other channels

PCS Features

The Arria V core logic connects to the PCS through an 8, 10, 16, 20, 32, 40, 64, 66, or 67 bit interface, depending on the transceiver data rate and protocol. Arria V devices contain PCS hard IP to support PCIe Gen1, Gen2, and Gen3, GbE, Serial RapidIO (SRIO), GPON, and CPRI.

All other standard and proprietary protocols within the following speed ranges are also supported:

- 611 Mbps to 6.5536 Gbps—supported through the custom double-width mode (up to 6.5536 Gbps) and custom single-width mode (up to 3.75 Gbps) of the transceiver PCS hard IP.
- 6.5536 Gbps to 10.3125 Gbps—supported through dedicated 80 or 64 bit interface that bypass the PCS hard IP and connects the PMA directly to the core logic. In Arria V GZ, this is supported in the transceiver PCS hard IP.

Table 21: Transceiver PCS Features for Arria V GX, GT, ST, and SX Devices

PCS Support[13]	Data Rates (Gbps)	Transmitter Data Path Feature	Receiver Data Path Feature
Custom single- and double-width modes	0.611 to ~6.5536	• Phase compensation FIFO • Byte serializer • 8B/10B encoder	• Word aligner • 8B/10B decoder • Byte deserializer • Phase compensation FIFO
SRIO	1.25 to 6.25		
Serial ATA	1.5, 3.0, 6.0		

(13) Data rates above 6.5536 Gbps up to 10.3125 Gbps, such as 10GBASE-R, are supported through the soft PCS.

PCS Support[13]	Data Rates (Gbps)	Transmitter Data Path Feature	Receiver Data Path Feature
PCIe Gen1 (x1, x2, x4, x8)	2.5 and 5.0	• Phase compensation FIFO • Byte serializer • 8B/10B encoder • PIPE 2.0 interface to the core logic	• Word aligner • 8B/10B decoder • Byte deserializer • Phase compensation FIFO • Rate match FIFO • PIPE 2.0 interface to the core logic
PCIe Gen2[14] (x1, x2, x4)			
GbE	1.25	• Phase compensation FIFO • Byte serializer • 8B/10B encoder	• Word aligner • 8B/10B decoder • Byte deserializer • Phase compensation FIFO • Rate match FIFO
XAUI[15]	3.125	• Phase compensation FIFO • Byte serializer • 8B/10B encoder • XAUI state machine for bonding four channels	• Word aligner • 8B/10B decoder • Byte deserializer • Phase compensation FIFO • XAUI state machine for realigning four channels • Deskew FIFO circuitry
SDI	0.27[16], 1.485, 2.97	• Phase compensation FIFO • Byte serializer	• Byte deserializer • Phase compensation FIFO
GPON[17]	1.25 and 2.5		
CPRI[18]	0.6144 to 6.144	• Phase compensation FIFO • Byte serializer • 8B/10B encoder • TX deterministic latency	• Word aligner • 8B/10B decoder • Byte deserializer • Phase compensation FIFO • RX deterministic latency

(13) Data rates above 6.5536 Gbps up to 10.3125 Gbps, such as 10GBASE-R, are supported through the soft PCS.
(14) PCIe Gen2 is supported only through the PCIe hard IP.
(15) XAUI is supported through the soft PCS.
(16) The 0.27 Gbps data rate is supported using oversampling user logic that you must implement in the FPGA fabric.
(17) The GPON standard does not support burst mode.
(18) CPRI data rates above 6.5536 Gbps, such as 9.8304 Gbps, are supported through the soft PCS.

Table 22: Transceiver PCS Features for Arria V GZ Devices

Protocol	Data Rates (Gbps)	Transmitter Data Path Features	Receiver Data Path Features
Custom PHY	0.6 to 9.80	• Phase compensation FIFO • Byte serializer • 8B/10B encoder • Bit-slip • Channel bonding	• Word aligner • Deskew FIFO • Rate match FIFO • 8B/10B decoder • Byte deserializer • Byte ordering
GPON	1.25 and 2.5		
Custom 10G PHY	9.98 to 12.5	• TX FIFO • Gear box • Bit-slip	• RX FIFO • Gear box
PCIe Gen1 (x1, x2 x4, x8)	2.5 and 5.0	• Phase compensation FIFO • Byte serializer • 8B/10B encoder • Bit-slip • Channel bonding • PIPE 2.0 interface to core logic	• Word aligner • Deskew FIFO • Rate match FIFO • 8B/10B decoder • Byte deserializer, • Byte ordering • PIPE 2.0 interface to core logic
PCIe Gen2 (x1, x2, x4, x8)			
PCIe Gen3 (x1, x2, x4, x8)	8.0	• Phase compensation FIFO • 128B/130B encoder • Scrambler • Gear box • Bit-slip	• Block synchronization • Rate match FIFO • 128B/130B decoder • Descrambler • Phase compensation FIFO
10GbE	10.3125	• TX FIFO • 64B/66B encoder • Scrambler • Gear box	• RX FIFO • 64B/66B decoder • Descrambler • Block synchronization • Gear box
Interlaken	3.125 to 12.5	• TX FIFO • Frame generator • CRC-32 generator • Scrambler • Disparity generator • Gear box	• RX FIFO • Frame generator • CRC-32 checker • Frame decoder • Descrambler • Disparity checker • Block synchronization • Gear box

Protocol	Data Rates (Gbps)	Transmitter Data Path Features	Receiver Data Path Features
40GBASE-R Ethernet	4 x 10.3125	• TX FIFO • 64B/66B encoder • Scrambler • Alignment marker insertion • Gearbox • Block stripper	• RX FIFO • 64B/66B decoder • Descrambler • Lane reorder • Deskew • Alignment marker lock • Block synchronization • Gear box • Destripper
100GBASE-R Ethernet	10 x 10.3125		
40G and 100G OTN	(4 +1) x 11.3 (10 +1) x 11.3	• TX FIFO • Channel bonding • Byte serializer	• RX FIFO • Lane deskew • Byte deserializer
GbE	1.25	• Phase compensation FIFO • Byte serializer • 8B/10B encoder • Bit-slip • Channel bonding • GbE state machine	• Word aligner • Deskew FIFO • Rate match FIFO • 8B/10B decoder • Byte deserializer • Byte ordering • GbE state machine
XAUI	3.125 to 4.25	• Phase compensation FIFO • Byte serializer • 8B/10B encoder • Bit-slip • Channel bonding • XAUI state machine for bonding four channels	• Word aligner • Deskew FIFO • Rate match FIFO • 8B/10B decoder • Byte deserializer • Byte ordering • XAUI state machine for realigning four channels
SRIO	1.25 to 6.25	• Phase compensation FIFO • Byte serializer • 8B/10B encoder • Bit-slip • Channel bonding • SRIO V2.1-compliant x2 and x4 channel bonding	• Word aligner • Deskew FIFO • Rate match FIFO • 8B/10B decoder • Byte deserializer • Byte ordering • SRIO V2.1-compliant x2 and x4 deskew state machine

SoC with HPS

Each SoC combines an FPGA fabric and an HPS in a single device. This combination delivers the flexibility of programmable logic with the power and cost savings of hard IP in these ways:

- Reduces board space, system power, and bill of materials cost by eliminating a discrete embedded processor
- Allows you to differentiate the end product in both hardware and software, and to support virtually any interface standard
- Extends the product life and revenue through in-field hardware and software updates

HPS Features

The HPS consists of a dual-core Arm* Cortex-A9 MPCore* processor, a rich set of peripherals, and a shared multiport SDRAM memory controller, as shown in the following figure.

Figure 12: HPS with Dual-Core Arm Cortex-A9 MPCore Processor

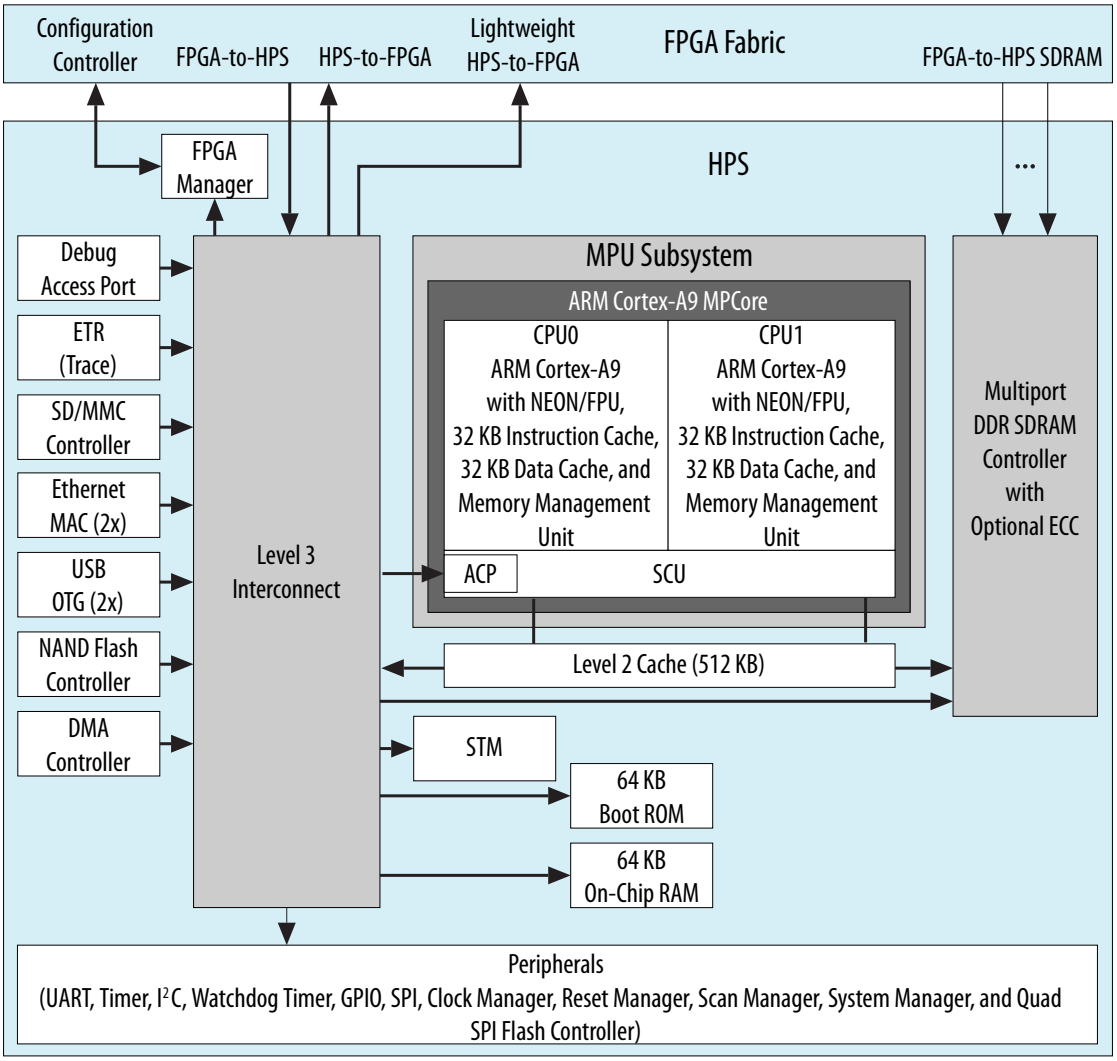

System Peripherals and Debug Access Port

Each Ethernet MAC, USB OTG, NAND flash controller, and SD/MMC controller module has an integrated DMA controller. For modules without an integrated DMA controller, an additional DMA controller module provides up to eight channels of high-bandwidth data transfers. Peripherals that communicate off-chip are multiplexed with other peripherals at the HPS pin level. This allows you to choose which peripherals to interface with other devices on your PCB.

The debug access port provides interfaces to industry standard JTAG debug probes and supports Arm CoreSight debug and core traces to facilitate software development.

HPS–FPGA AXI Bridges

The HPS–FPGA bridges, which support the Advanced Microcontroller Bus Architecture (AMBA®) Advanced eXtensible Interface (AXI™) specifications, consist of the following bridges:

- FPGA-to-HPS AXI bridge—a high-performance bus supporting 32, 64, and 128 bit data widths that allows the FPGA fabric to issue transactions to slaves in the HPS.
- HPS-to-FPGA AXI bridge—a high-performance bus supporting 32, 64, and 128 bit data widths that allows the HPS to issue transactions to slaves in the FPGA fabric.
- Lightweight HPS-to-FPGA AXI bridge—a lower latency 32 bit width bus that allows the HPS to issue transactions to slaves in the FPGA fabric. This bridge is primarily used for control and status register (CSR) accesses to peripherals in the FPGA fabric.

The HPS–FPGA AXI bridges allow masters in the FPGA fabric to communicate with slaves in the HPS logic, and vice versa. For example, the HPS-to-FPGA AXI bridge allows you to share memories instantiated in the FPGA fabric with one or both microprocessors in the HPS, while the FPGA-to-HPS AXI bridge allows logic in the FPGA fabric to access the memory and peripherals in the HPS.

Each HPS–FPGA bridge also provides asynchronous clock crossing for data transferred between the FPGA fabric and the HPS.

HPS SDRAM Controller Subsystem

The HPS SDRAM controller subsystem contains a multiport SDRAM controller and DDR PHY that are shared between the FPGA fabric (through the FPGA-to-HPS SDRAM interface), the level 2 (L2) cache, and the level 3 (L3) system interconnect. The FPGA-to-HPS SDRAM interface supports AMBA AXI and Avalon® Memory-Mapped (Avalon-MM) interface standards, and provides up to six individual ports for access by masters implemented in the FPGA fabric.

To maximize memory performance, the SDRAM controller subsystem supports command and data reordering, deficit round-robin arbitration with aging, and high-priority bypass features. The SDRAM controller subsystem supports DDR2, DDR3, or LPDDR2 devices up to 4 Gb in density operating at up to 533 MHz (1066 Mbps data rate).

FPGA Configuration and Processor Booting

The FPGA fabric and HPS in the SoC are powered independently. You can reduce the clock frequencies or gate the clocks to reduce dynamic power, or shut down the entire FPGA fabric to reduce total system power.

You can configure the FPGA fabric and boot the HPS independently, in any order, providing you with more design flexibility:

- You can boot the HPS independently. After the HPS is running, the HPS can fully or partially reconfigure the FPGA fabric at any time under software control. The HPS can also configure other FPGAs on the board through the FPGA configuration controller.
- You can power up both the HPS and the FPGA fabric together, configure the FPGA fabric first, and then boot the HPS from memory accessible to the FPGA fabric.

Note: Although the FPGA fabric and HPS are on separate power domains, the HPS must remain powered up during operation while the FPGA fabric can be powered up or down as required.

Related Information

- **Arria V GT, GX, ST, and SX Device Family Pin Connection Guidelines**
  Provides detailed information about power supply pin connection guidelines and power regulator sharing.
- **Arria V GZ Device Family Pin Connection Guidelines**
  Provides detailed information about power supply pin connection guidelines and power regulator sharing.

Hardware and Software Development

For hardware development, you can configure the HPS and connect your soft logic in the FPGA fabric to the HPS interfaces using the Platform Designer (Standard) system integration tool in the Intel Quartus Prime software.

For software development, the Arm-based SoC devices inherit the rich software development ecosystem available for the Arm Cortex-A9 MPCore processor. The software development process for Intel SoCs follows the same steps as those for other SoC devices from other manufacturers. Support for Linux, VxWorks®, and other operating systems is available for the SoCs. For more information on the operating systems support availability, contact the Intel sales team.

You can begin device-specific firmware and software development on the Intel SoC Virtual Target. The Virtual Target is a fast PC-based functional simulation of a target development system—a model of a complete development board that runs on a PC. The Virtual Target enables the development of device-specific production software that can run unmodified on actual hardware.

Related Information

International Intel Sales Support Offices

Dynamic and Partial Reconfiguration

The Arria V devices support dynamic reconfiguration and partial reconfiguration.

Dynamic Reconfiguration

The dynamic reconfiguration feature allows you to dynamically change the transceiver data rates, PMA settings, or protocols of a channel, without affecting data transfer on adjacent channels. This feature is ideal for applications that require on-the-fly multiprotocol or multirate support. You can reconfigure the PMA, PCS, and PCIe hard IP blocks with dynamic reconfiguration.

Partial Reconfiguration

Note: Partial reconfiguration is an advanced feature of the device family. If you are interested in using partial reconfiguration, contact Intel for support.

Partial reconfiguration allows you to reconfigure part of the device while other sections of the device remain operational. This capability is important in systems with critical uptime requirements because it allows you to make updates or adjust functionality without disrupting services.

Apart from lowering cost and power consumption, partial reconfiguration increases the effective logic density of the device because placing device functions that do not operate simultaneously is not necessary. Instead, you can store these functions in external memory and load them whenever the functions are required. This capability reduces the size of the device because it allows multiple applications on a single device—saving the board space and reducing the power consumption.

Intel simplifies the time-intensive task of partial reconfiguration by building this capability on top of the proven incremental compile and design flow in the Intel Quartus Prime design software. With the Intel solution, you do not need to know all the intricate device architecture details to perform a partial reconfiguration.

Partial reconfiguration is supported through the FPP x16 configuration interface. You can seamlessly use partial reconfiguration in tandem with dynamic reconfiguration to enable simultaneous partial reconfiguration of both the device core and transceivers.

Enhanced Configuration and Configuration via Protocol

Table 23: Configuration Schemes and Features of Arria V Devices

Arria V devices support 1.8 V, 2.5 V, 3.0 V, and 3.3 V[19] programming voltages and several configuration schemes.

Mode	Data Width	Max Clock Rate (MHz)	Max Data Rate (Mbps)	Decompression	Design Security	Partial Reconfiguration [20]	Remote System Update
AS through the EPCS and EPCQ serial configuration device	1 bit, 4 bits	100	—	Yes	Yes	—	Yes
PS through CPLD or external microcontroller	1 bit	125	125	Yes	Yes	—	—

(19) Arria V GZ does not support 3.3 V.
(20) Partial reconfiguration is an advanced feature of the device family. If you are interested in using partial reconfiguration, contact Intel for support.

Mode	Data Width	Max Clock Rate (MHz)	Max Data Rate (Mbps)	Decompression	Design Security	Partial Reconfiguration (20)	Remote System Update
FPP	8 bits	125	—	Yes	Yes	—	Parallel flash loader
	16 bits	125	—	Yes	Yes	Yes(21)	
	32 bits(22)	100	—	Yes	Yes	—	
CvP (PCIe)	x1, x2, x4, and x8 lanes	—	—	Yes	Yes	Yes	—
JTAG	1 bit	33	33	—	—	—	—
Configuration via HPS	16 bits	125	—	Yes	Yes	Yes (21)	Parallel flash loader
	32 bits	100	—	Yes	Yes	—	

Instead of using an external flash or ROM, you can configure the Arria V devices through PCIe using CvP. The CvP mode offers the fastest configuration rate and flexibility with the easy-to-use PCIe hard IP block interface. The Arria V CvP implementation conforms to the PCIe 100 ms power-up-to-active time requirement.

Note: Although Arria V GZ devices support PCIe Gen3, you can use only PCIe Gen1 and PCIe Gen2 for CvP configuration scheme.

Related Information

Configuration via Protocol (CvP) Implementation in V-Series FPGA Devices User Guide
Provides more information about CvP.

Power Management

Leveraging the FPGA architectural features, process technology advancements, and transceivers that are designed for power efficiency, the Arria V devices consume less power than previous generation Arria V FPGAs:

- Total device core power consumption—less by up to 50%.
- Transceiver channel power consumption—less by up to 50%.

Additionally, Arria V devices contain several hard IP blocks, including PCIe Gen1, Gen2, and Gen3, GbE, SRIO, GPON, and CPRI protocols, that reduce logic resources and deliver substantial power savings of up to 25% less power than equivalent soft implementations.

(20) Partial reconfiguration is an advanced feature of the device family. If you are interested in using partial reconfiguration, contact Intel for support.
(21) Supported at a maximum clock rate of 62.5 MHz.
(22) Arria V GZ only

Document Revision History

Document Version	Changes
2019.04.16	Updated RoHS and optional suffix information in sample ordering code and available options diagrams for all the Arria V devices.

Date	Version	Changes
December 2015	2015.12.21	• Updated RoHS and optional suffix information in sample ordering code and available options diagrams for Arria V GX and GT devices. • Changed instances of *Quartus II* to *Quartus Prime*.
January 2015	2015.01.23	• Updated package dimension for Arria V GZ H780 package from 29 mm to 33 mm. • Updated dual-core ARM Cortex-A9 MPCore processor maximum frequency from 800 MHz to 1.05 GHz.
December 2013	2013.12.26	• 10-Gbps Ethernet (10GbE) PCS and Interlaken PCS are for Arria V GZ only. • Removed "Preliminary" texts from Ordering Code figures, Maximum Resources, Package Plan and I/O Vertical Migration tables. • Added link to **Altera Product Selector** for each device variant. • Added leaded package options. • Removed the note "The number of PLLs includes general-purpose fractional PLLs and transceiver fractional PLLs." for all PLLs in the Maximum Resource Counts table. • Corrected FPGA GPIO for Arria V SX B3 and B5 as well as Arria V ST D3 and D5 F896 package from 170 to 250. • Corrected FPGA GPIO for Arria V SX B3 and B5 as well as Arria V ST D3 and D5 F1152 package from 350 to 385. • Corrected FPGA GPIO for Arria V SX B3 and B5 as well as Arria V ST D3 and D5 F1517 package from 528 to 540. • Corrected LVDS Transmitter for Arria V SX B3 and B5 as well as Arria V ST D3 and D5 devices from 121 to 120. • Added links to Altera's **External Memory Spec Estimator** tool to the topics listing the external memory interface performance. • Added x2 for PCIe Gen3, Gen 2, and Gen 1.

Date	Version	Changes
August 2013	2013.08.19	• Removed the note about the PCIe hard IP on the right side of the device in the F896 package of the Arria V GX variant. These devices do not have PCIe hard IP on the right side. • Added transceiver speed grade 6 to the available options of the Arria V SX variant. • Corrected the maximum LVDS transmitter channel counts for the Arria V GX A1 and A3 devices from 68 to 67. • Corrected the maximum FPGA GPIO count for Arria V ST D5 devices from 540 to 528.
June 2013	2013.06.03	• Removed statements about contacting Altera for SFF-8431 compliance requirements. Refer to the **Transceiver Architecture in Arria V Devices** chapter for the requirements.
May 2013	2013.05.06	• Moved all links to the Related Information section of respective topics for easy reference. • Added link to the known document issues in the Knowledge Base. • Updated the available options, maximum resource counts, and per package information for the Arria V SX and ST device variants. • Updated the variable DSP multipliers counts for the Arria V SX and ST device variants. • Clarified that partial reconfiguration is an advanced feature. Contact Altera for support of the feature. • Added footnote to clarify that MLAB 64 bits depth is available only for Arria V GZ devices. • Updated description about power-up sequence requirement for device migration to improve clarity.
January 2013	2013.01.11	• Added the L optional suffix to the Arria V GZ ordering code for the –I3 speed grade. • Added a note about the power-up sequence requirement if you plan to migrate your design from the Arria V GX A5 and A7, and Arria V GT C7 devices to other Arria V devices.

Date	Version	Changes
November 2012	2012.11.19	• Updated the summary of features. • Updated Arria V GZ information regarding 3.3 V I/O support. • Removed Arria V GZ engineering sample ordering code. • Updated the maximum resource counts for Arria V GX and GZ. • Updated Arria V ST ordering codes for transceiver count. • Updated transceiver counts for Arria V ST packages. • Added simplified floorplan diagrams for Arria V GZ, SX, and ST. • Added FPP x32 configuration mode for Arria V GZ only. • Updated CvP (PCIe) remote system update support information. • Added HPS external memory performance information. • Updated template.
October 2012	3.0	• Added Arria V GZ information. • Updated Table 1, Table 2, Table 3, Table 14, Table 15, Table 16, Table 17, Table 18, Table 19, Table 20, and Table 21. • Added the "Arria V GZ" section. • Added Table 8, Table 9 and Table 22.
July 2012	2.1	• Added –I3 speed grade to Figure 1 for Arria V GX devices. • Updated the 6-Gbps transceiver speed from 6.553 Gbps to 6.5536 Gbps in Figure 3 and Figure 1.
June 2012	2.0	• Restructured the document. • Added the "Embedded Memory Capacity" and "Embedded Memory Configurations" sections. • Added Table 1, Table 3, Table 12, Table 15, and Table 16. • Updated Table 2, Table 4, Table 5, Table 6, Table 7, Table 8, Table 9, Table 10, Table 11, Table 13, Table 14, and Table 19. • Updated Figure 1, Figure 2, Figure 3, Figure 4, and Figure 8. • Updated the "FPGA Configuration and Processor Booting" and "Hardware and Software Development" sections. • Text edits throughout the document.
February 2012	1.3	• Updated Table 1–7 and Table 1–8. • Updated Figure 1–9 and Figure 1–10. • Minor text edits.
December 2011	1.2	Minor text edits.

Date	Version	Changes
November 2011	1.1	• Updated Table 1–1, Table 1–2, Table 1–3, Table 1–4, Table 1–6, Table 1–7, Table 1–9, and Table 1–10. • Added “SoC FPGA with HPS” section. • Updated “Clock Networks and PLL Clock Sources” and “Ordering Information” sections. • Updated Figure 1–5. • Added Figure 1–6. • Minor text edits.
August 2011	1.0	Initial release.