420-002
Sealtite™/Liquidtite Conduit Backshell
Direct Coupling - Low Profile

CONNECTOR DESIGNATORS

A-B*-C-D-E-F

G-H-J-K-L-S

*** Conn. Desig. B See Note 6**

DIRECT COUPLING

420 F S 002 M 16 03-6

- Product Series
- Connector Designator
- Angle and Profile
  - A = 90°
  - B = 45°
  - S = Straight
- Basic Part No.
- Finish (Table II)
- Shell Size (Table I)
- Cable Entry (Table V)
- Length: S only (1/2 inch increments: e.g. 6 = 3 inches)

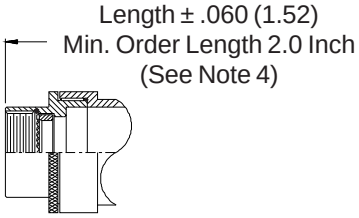

STYLE 2 (STRAIGHT)

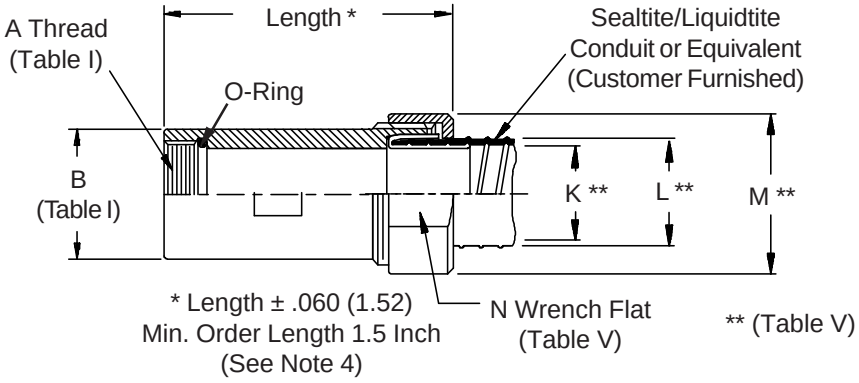

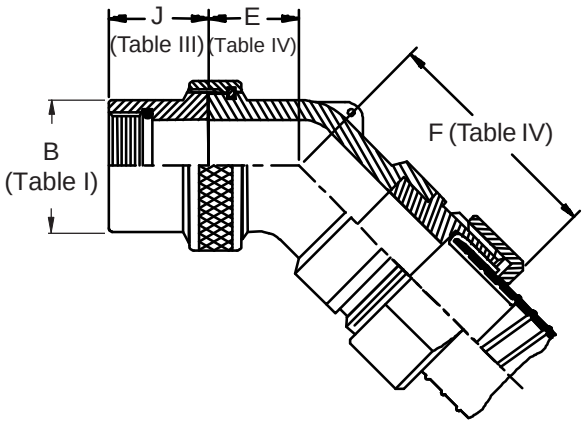

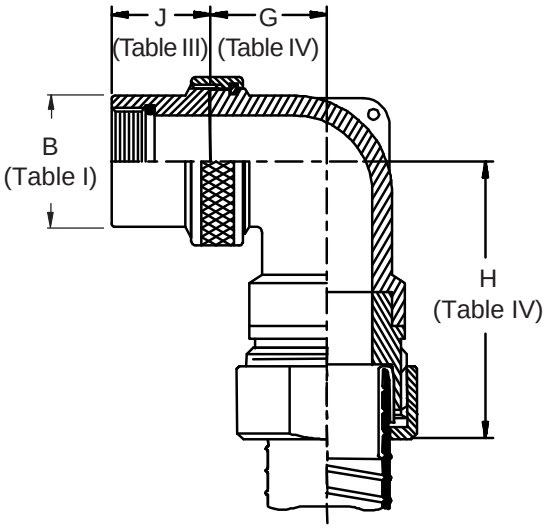

© 2005 Glenair, Inc.

TABLE III: FRONT ADAPTER			
	J Max - Conn. Designator		
Shell Size	A-E-F J-H-L-S	D-B-G-K	C
08/09	1.180 (30.0)	1.250 (31.8)	
10/11	1.180 (30.0)	1.250 (31.8)	
12/13	1.180 (30.0)	1.250 (31.8)	1.735 (44.1)
14/15	1.180 (30.0)	1.250 (31.8)	1.915 (48.6)
16/17	1.380 (35.0)	1.560 (39.6)	1.915 (48.6)
18/19	1.380 (35.0)	1.560 (39.6)	1.915 (48.6)
20/21	1.380 (35.0)	1.560 (39.6)	1.915 (48.6)
22/23	1.380 (35.0)	1.560 (39.6)	1.915 (48.6)
24/25	1.380 (35.0)	1.560 (39.6)	1.915 (48.6)
28/29	1.610 (40.9)	1.560 (39.6)	1.915 (48.6)
32/33	1.610 (40.9)	1.750 (44.5)	1.915 (48.6)
36	1.610 (40.9)	1.750 (44.5)	1.915 (48.6)
40	1.610 (40.9)	2.190 (55.6)	1.915 (48.6)

See inside back cover fold-out or pages 13 and 14 for Tables I and II.

1. When maximum cable entry (page 22) is exceeded, Style 2 will be supplied. (Function S only).
2. Metric dimensions (mm) are indicated in parentheses.
3. Cable range is defined as the accommodations range for the wire bundle or cable. Dimensions shown are not intended for inspection criteria.
4. Consult factory for shorter lengths on straight backshells.
5. Sealtite is a trademark of Anaconda Corp.
6. When using Connector Designator B refer to pages 18 and 19 for part number development.

TABLE IV: ELBOW DIMENSIONS								
Elbow Size	E Max		F Max		G Max		H Max	
01	.630	(16.0)	1.870	(47.5)	.709	(18.0)	1.940	(49.3)
02	.692	(17.6)	1.930	(49.0)	.734	(18.6)	1.960	(49.8)
03	.848	(21.5)	2.130	(54.1)	.990	(25.1)	2.120	(53.8)
04	1.036	(26.3)	2.320	(58.9)	1.090	(27.7)	2.290	(58.2)
05	1.130	(28.7)	2.470	(62.7)	1.325	(33.7)	2.400	(61.0)
06	1.317	(33.5)	2.620	(66.5)	1.827	(46.4)	2.820	(71.6)
07	1.348	(34.2)	2.710	(68.8)	2.027	(51.5)	2.820	(71.6)

TABLE V: CABLE ENTRY													
Dash No.	Conduit Size (Ref.)	K Dimension Min		K Dimension Max		L Dimension Min		L Dimension Max		M Max		N Max Wrench Flat	
01	3/8	.484	(12.3)	.504	(12.8)	.690	(17.5)	.710	(18.0)	1.155	(29.3)	1.000	(25.4)
02	1/2	.622	(15.8)	.642	(16.3)	.820	(20.8)	.840	(21.3)	1.282	(32.6)	1.125	(28.6)
03	3/4	.820	(20.8)	.840	(21.3)	1.030	(26.2)	1.050	(26.7)	1.531	(38.9)	1.375	(34.9)
04	1	1.041	(26.4)	1.066	(27.1)	1.290	(32.8)	1.315	(33.4)	1.781	(45.2)	1.625	(41.3)
05	1 1/4	1.380	(35.1)	1.410	(35.8)	1.630	(41.4)	1.660	(42.2)	2.218	(56.3)	2.062	(52.4)
06	1 1/2	1.575	(40.0)	1.600	(40.6)	1.875	(47.6)	1.900	(48.3)	2.468	(62.7)	2.312	(58.7)
07	2	2.020	(51.3)	2.045	(51.9)	2.350	(59.7)	2.375	(60.3)	3.031	(77.0)	2.875	(73.0)

© 2005 Glenair, Inc.