Bussmann series
14 x 51 mm Modular fuse holders

Product description

Eaton's Bussmann series 14 x 51 mm modular fuse holders are suitable for use with standard cylindrical fuse links and FW type ferrule fuse links.

Their compact dimensions helps reduce space, allows for higher cable bending radius. Low watts loss and wide range of accessories make them ideally suited for most industrial applications.

Standard features

- Compact dimensions
- Ventilation zones optimised for a better heat dissipation
- Inbuilt padlcocking facility
- IP20 degree of protection (see details page 3)
- Photovoltaic version rated at 1500 V d.c. (IEC only) for use with gPV fuse links
- Flexibility to mount on DIN-Rail and/or screw mounting
- Toolless DIN-Rail mounting, improves ease of use and reduces installation time and costs.

EATON
Powering Business Worldwide

Catalogue symbol

- CH14 (# of poles)**DU**: standard fuse holder
- CH141D**NXU**: neutral fuse holder
- CH14(# of poles)**DNU**: standard fuse holder and neutral
- CH14(# of poles)**DIU:** fuse holder with neon indicator
- CH14(# of poles)**DNIU**: fuse holder with neutral and neon indicator
- CH14(# of poles)**DMSU-F**: fuse holder with microswitch (pre-breaking/fuse operation)
- CH14(# of poles)**DNMSU-F**: fuse holder with neutral and microswitch (pre-breaking/fuse operation)
- CH141DI-**48U**: fuse holder with LED Indicator
- CH**PV**14(# of poles)U: suitable for photovoltaic fuse links

Compatible fuse links

- C14G and C14M: 14 x 51 mm fuse links
- PV-(amp rating)A14F: Photovoltaic gPV Fuse links
- FW Ferrule fuse links

Table 1. FW Ferrule fuse links

Catalogue number	Maximum continuous fuse current	Catalogue number	Maximum continuous fuse current
FWH-5A14F	5 A	FWP-5A14F	5 A
FWH-10A14F	10 A	FWP-10A14F	10 A
FWH-15A14F	15 A	FWP-15A14F	15 A
FWH-20A14F	20 A	FWP-20A14F	20 A
FWH-25A14F	25 A	FWP-25A14F	25 A
FWH-30A14F	24 A	FWP-30A14F	30 A
FWX-5A14F	5 A	FWP-32A14F	32 A
FWX-10A14F	10 A	FWP-40A14F	40 A
FWX-15A14F	15 A	FWP-50A14F	49 A
FWX-20A14F	20 A		
FWX-25A14F	25 A		
FWX-30A14F	30 A		

Technical data

- Number of poles: 1 to 4
- Rated voltage

	IEC	UL
CH14DU	690 V a.c / 750 V d.c.	700 V a.c.
CHPV14U	1500 V d.c.	1500 V d.c.

- Rated current
  - IEC: 50 A (a.c. and d.c.)
  - UL: 50 A
- Rated power acceptance: 5 W to IEC 60269-2
- Maximum power acceptance: 6.2 W
- Protection index: IP20
- Rated impulse withstand voltage (U_{imp}): 6 kV
- SCCR Rating: 120 kA ac, 10 kA dc for CHPV14U
- Cable size: 1.5 - 50 mm^2
- Torque settings:
  - Recommended torque setting 3.5 N•m
  - Maximum torque setting: 3.5 N•m
- Mounting 35 mm DIN-Rail or 2 x M4 panel mounting screws
- Self-extinguishable UL 94-V0 rated polyester material
- Storage & operating temperature range

CH14D range:

- Storage temperature -40°C to +80°C
- Operating temperature -20°C to +70°C

CHPV14 range - storage and operating temperature:

- -20°C to +90°C (indicating)
- -20°C to +120°C (non indicating)

- RoHS compliant.

Standards/Approvals

- IEC 60269-1 and 60269-2
- UL listed: file numbers E14853 for general purpose only; E348242 for photovoltaic gPV CHPV14 modular fuse holders
- CCC

Packaging

- 1-pole: 6 per pack / 2-pole: 3 per pack
- 3-pole: 2 per pack / 4-pole: 1 per pack

Table 2. Technical Data

Old Catalogue number	New Catalogue number	Number of poles	Description
Neutral only			
CH141BNX	CH141DNXU	1	Neutral cylindrical fuse holder
Fuse holder only			
CH141B	CH141DU	1	1-pole cylindrical fuse holder
CH142B	CH142DU	2	2-pole cylindrical fuse holder
CH143B	CH143DU	3	3-pole cylindrical fuse holder
CH144B	CH144DU	4	4-pole cylindrical fuse holder
Fuse holder and neutral			
CH141BN	CH141DNU	2	1-pole + neutral cylindrical fuse holder
CH143BN	CH143DNU	4	2-pole + neutral cylindrical fuse holder
Fuse holder with neon indicator			
CH141BI	CH141DIU	1	1-pole cylindrical fuse holder with neon indicator
CH142BI	CH142DIU	2	2-pole cylindrical fuse holder with neon indicator
CH143BI	CH143DIU	3	3-pole indicator fuse holder with neon indicator
CH144BI	CH144DIU	4	4-pole indicator fuse holder with neon indicator
Fuse holder with neon indicator and neutral			
CH141BNI	CH141DNIU	2	1-pole + neutral cylindrical fuse holder with neon indicator
CH143BNI	CH143DNIU	4	3-pole + neutral cylindrical fuse holder with neon indicator
Fuse holder with microswitch			
CH141BMS & CH141BMS-F	CH141DMSU-F	1	1-pole cylindrical fuse holder with microswitch for remote fuse indication operation
CH143BMS CH143BMS-F	CH143DMSU-F	3	3-pole cylindrical fuse holder with microswitch for remote fuse indication operation
Fuse holder with microswitch and neutral			
CH143BNMS-F & CH143BNMS	CH143DNMSU-F	4	3-pole + neutral cylindrical fuse holder with microswitch for remote fuse indication operation
Fuse holder with LED Indicator			
N/A	CHPV141DI-48U	1	1-pole cylindrical fuse holder with LED indicator
Fuse holder for Photovoltaic applications			
CH141D-PV	CHPV141U	1	1-pole cylindrical fuse holder
N/A	CHPV141IU	1	1-pole cylindrical fuse holder with neon indicator
N/A	CHPV142U	2	2-pole cylindrical fuse holder
N/A	CHPV142IU	2	2-pole cylindrical fuse holder with neon indicator

Table 3. Accessories

Catalogue number	Description	Unit packing
JV-L	Multi-pole connector kit. One kit will gang up to 4-poles together	12
CH14-SPS	Microswitch to work on **CH141D(I)U**, 1 n/o + 1 n/c changeover type	3
CH14-TPS	Microswitch to work on **CH143D(I)U**, 1 n/o + 1 n/c changeover type	3
CH14-CTP	IP20 Protection accessory, provides IP20 protection to terminals with 10mm^2 or less cable	12

Dimensional data - mm

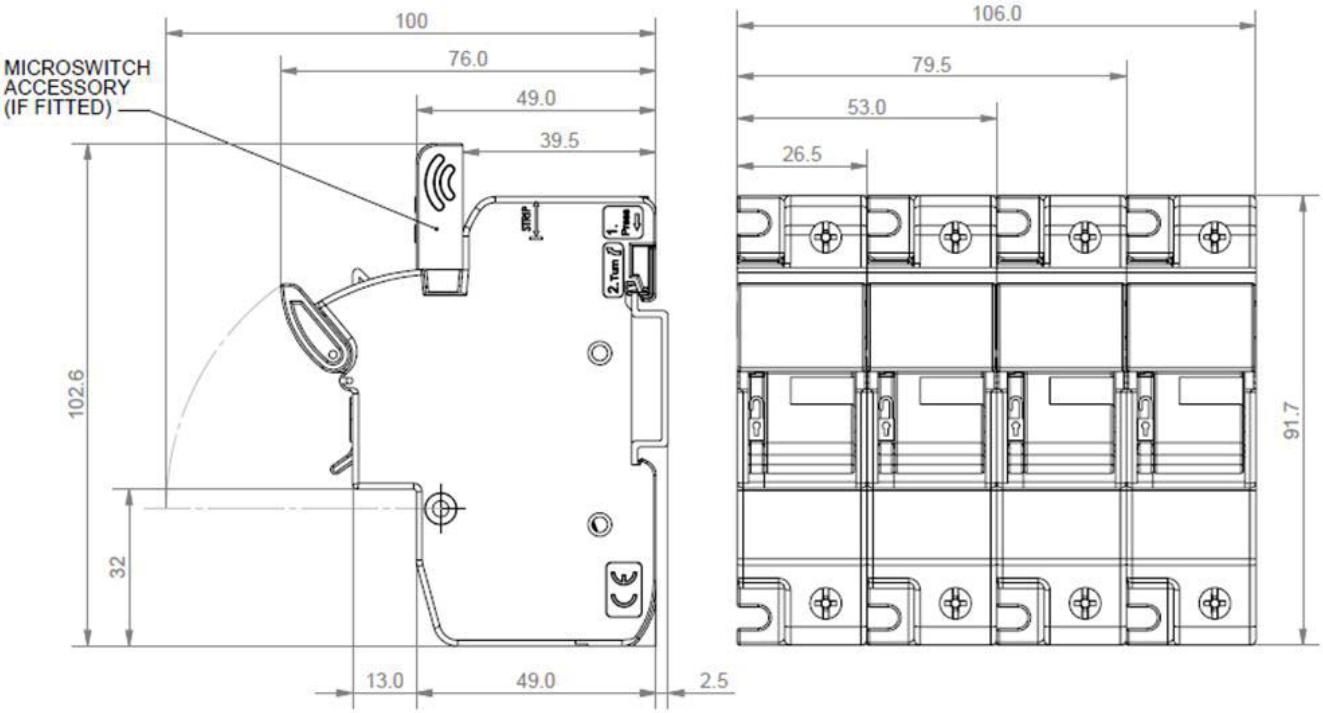

Changes to the products, to the information contained in this document, and to prices are reserved; so are errors and omissions. Only order confirmations and technical documentation by Eaton is binding. Photos and pictures also do not warrant a specific layout or functionality. Their use in whatever form is subject to prior approval by Eaton. The same applies to Trademarks (especially Eaton, Moeller, and Cutler-Hammer). The Terms and Conditions of Eaton apply, as referenced on Eaton Internet pages and Eaton order confirmations.

Eaton
EMEA Headquarters
Route de la Longeraie 7
1110 Morges, Switzerland
Eaton.eu

© 2016 Eaton
All Rights Reserved
Publication No. 10080
September 2016

Eaton is a registered trademark.

All other trademarks are property of their respective owners.