SOLDER SUFFIX	CUSTOMER TERMINAL	RoHS	LEAD(Pb)-FREE
LF3	Sn100%	Yes	Yes

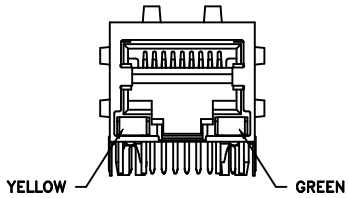

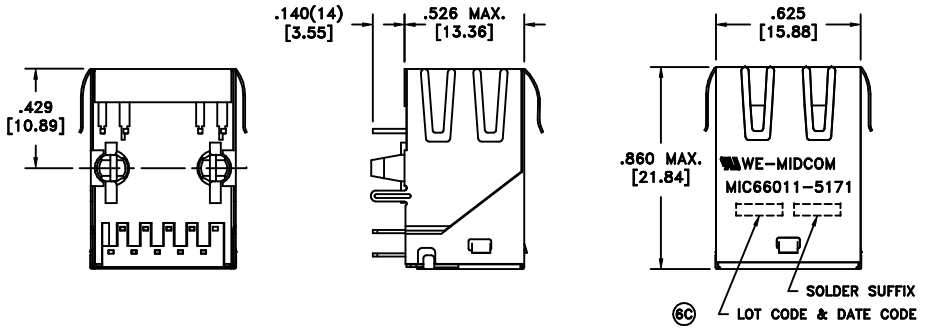

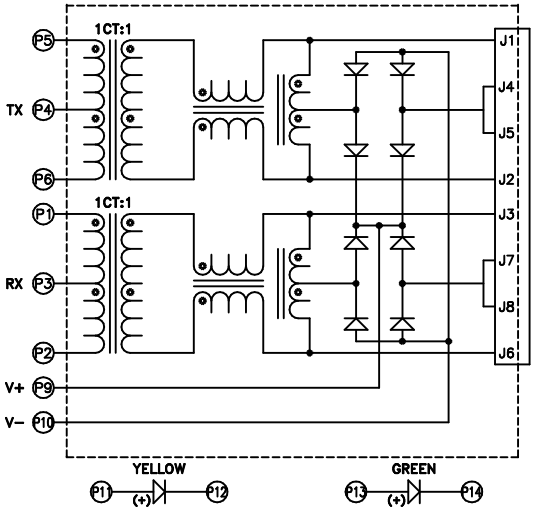

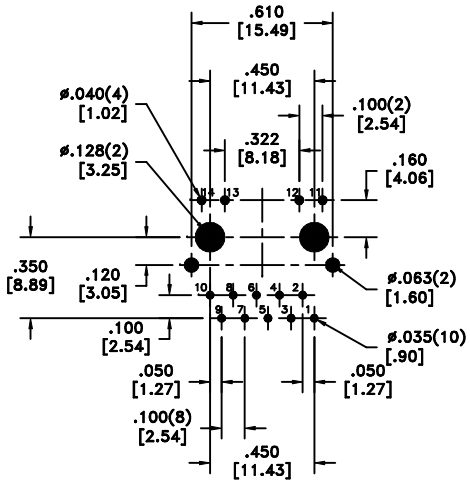

RECOMMENDED
P.C. PATTERN, COMPONENT SIDE

ELECTRICAL SPECIFICATIONS @ 25°C unless otherwise noted:

INDUCTANCE:	350uH min., 100kHz, 100mV, 8mADC, J1-J2; J3-J6, Lp.
DIELECTRIC RATING:	1500Vrms for 1 minute between P1-J1(tie P2+P5, J2+J3).
TURNS RATIO/POLARITY:	(P1-P2):(J3-J6) = 1:1, ±2%. (P5-P6):(J1-J2) = 1:1, ±2%.
INSERTION LOSS:	-1.0dB max., 1MHz - 100MHz.
RETURN LOSS:	-18dB min., 1M - 30MHz. -16dB min., 30M - 45MHz. -14dB min., 45M - 60MHz. -12dB min., 60M - 80MHz.
CROSSTALK:	-35dB min., 1MHz - 100MHz.
COMMON MODE REJECTION:	-35dB min., 1MHz - 100MHz.

OPERATING TEMPERATURE RANGE: -40°C to +85°C.

Designed to handle 350mADC and meet 802.3af.

AGENCY NUMBER	
UL60950-1	E205930

Midcom, Inc.
Watertown, SD USA
Toll Free: 800-643-2661
Fax: 605-886-4486

Unless otherwise specified:
Tolerances: Fractions: ±1/64
Angles: ±1° Decimals: ±.010 [.25]
This drawing is dual dimensioned. Dimensions in brackets are in millimeters.

DRAWING TITLE
TRANSFORMER
10/100Mbs PoE

Midcom

REVISIONS: SEE SHEET 1

DRAWING NO.
MIC66011-5171T-LF3

REV. 6C 2/07

SCALE ---