MICRO SWITCH
FREEPORT ILLINOIS, U.S.A
A DIVISION OF HONEYWELL INC.
FED. MFG. CODE 91929

SWITCH-ENCLOSED

CATALOG LISTING
BZF2-3YN-LH

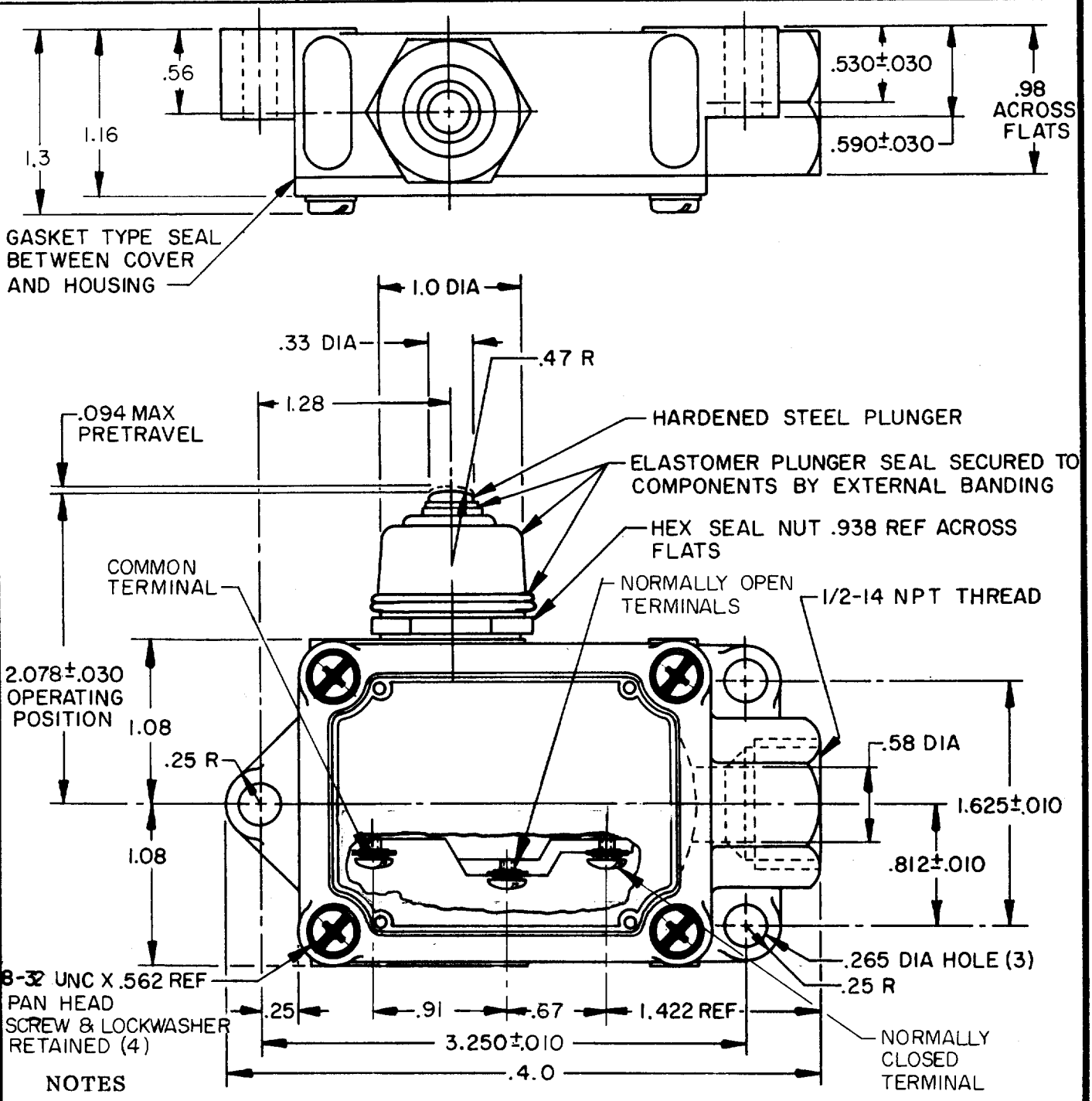

NOTES

1 - 6-32 NC X .219 BINDER HEAD TERMINAL SCREWS AND LOCKWASHERS

THIS DRAWING COVERS A PROPRIETARY ITEM AND IS THE PROPERTY OF MICRO SWITCH, A DIVISION OF HONEYWELL. THIS DRAWING IS NOT TO BE COPIED OR USED WITHOUT THE APPROVAL OF MICRO SWITCH.

THIRD ANGLE PROJECTION

CHARACTERISTICS	ELECTRICAL DATA	SCALE FULL	DO NOT SCALE PRINT
OPERATING FORCE - - - - - - 3 LBS MAX	CONTACT ARRANGEMENT S P D T	UNLESS OTHERWISE SPECIFIED TOLERANCES ARE	
RELEASE FORCE - - - - - - - 1/2 LB MIN		ONE PLACE (.0) ±.030 TWO PLACE (.00) ±.015 THREE PLACE (.000) ±.005 ANGLES ±	
DIFFERENTIAL TRAVEL - - - - - .005 MAX		RAW MATERIAL – COMMERCIAL STANDARD	
OVERTRAVEL - - - - - - - - - - .219 MIN		DIMENSIONS ARE IN INCHES AND ARE TO BE MET BEFORE PROTECTIVE COATINGS ARE APPLIED	
BASIC SWITCH REPLACEMENT - - BZ-3YT		MICRO SWITCH STANDARDS APPLY	
		WEIGHT	

BZF2-3YN-LH

REPLACES
RELEASE NO.
DRAWING NUMBER
M
ISSUE
CHECK

REVISIONS

A	C064181	TSK 27 SEPT 88
B	C071134	TSM 27 SEP 91
C	C072788	GJW 12 SEP 92
D	CO-77179-C	JJO 12 MAR 94

CHECK
CHECK
CHECK
CHECK
DRAWN
TSK 27 SEPT 88
DJS 11 OCT 88

FO-52848-B