260-Pin BGA
Commercial Temp
Industrial Temp

288Mb SigmaDDR-IIIe™ Burst of 2 SRAM

Up to 675 MHz
1.3V V_{DD}
1.2V, 1.3V, or 1.5V V_{DDQ}

Features

- 8Mb x 36 and 16Mb x 18 organizations available
- 675 MHz maximum operating frequency
- 675 MT/s peak transaction rate (in millions per second)
- 48 Gb/s peak data bandwidth (in x36 devices)
- Common I/O DDR Data Bus
- Non-multiplexed SDR Address Bus
- One operation - Read or Write - per clock cycle
- Burst of 2 Read and Write operations
- 3 cycle Read Latency
- 1.3V nominal core voltage
- 1.2V, 1.3V, or 1.5V HSTL I/O interface
- Configurable ODT (on-die termination)
- ZQ pin for programmable driver impedance
- ZT pin for programmable ODT impedance
- IEEE 1149.1 JTAG-compliant Boundary Scan
- 260-pin, 14 mm x 22 mm, 1 mm ball pitch, 6/6 RoHS-compliant BGA package

SigmaDDR-IIIe™ Family Overview

SigmaDDR-IIIe SRAMs are the Common I/O half of the SigmaQuad-IIIe/SigmaDDR-IIIe family of high performance SRAMs. Although very similar to GSI's second generation of networking SRAMs (the SigmaQuad-II/SigmaDDR-II family), these third generation devices offer several new features that help enable significantly higher performance.

Clocking and Addressing Schemes

The GS82583ET18/36GK SigmaDDR-IIIe SRAMs are synchronous devices. They employ three pairs of positive and negative input clocks; one pair of master clocks, CK and $\overline{CK}$, and two pairs of write data clocks, KD[1:0] and $\overline{KD}$[1:0]. All six input clocks are single-ended; that is, each is received by a dedicated input buffer.

CK and $\overline{CK}$ are used to latch address and control inputs, and to control all output timing. KD[1:0] and $\overline{KD}$[1:0] are used solely to latch data inputs.

Each internal read and write operation in a SigmaDDR-IIIe B2 SRAM is two times wider than the device I/O bus. An input data bus de-multiplexer is used to accumulate incoming data before it is simultaneously written to the memory array. An output data multiplexer is used to capture the data produced from a single memory array read and then route it to the appropriate output drivers as needed. Therefore, the address field of a SigmaDDR-IIIe B2 SRAM is always one address pin less than the advertised index depth (e.g. the 16M x 18 has 8M addressable index).

Parameter Synopsis

Speed Grade	Max Operating Frequency	Read Latency	V_{DD}
-675	675 MHz	3 cycles	1.25V to 1.35V
-625	625 MHz	3 cycles	1.25V to 1.35V
-550	550 MHz	3 cycles	1.25V to 1.35V
-500	500 MHz	3 cycles	1.25V to 1.35V

 © 2014, GSI Technology
Specifications cited are subject to change without notice. For latest documentation see http://www.gsitechnology.com.

16M x 18 Pinout (Top View)

	1	2	3	4	5	6	7	8	9	10	11	12	13
A	V_{DD}	V_{DDQ}	V_{DD}	V_{DDQ}	NC (RSVD)	MCH (CFG)	MCL	ZQ	PZT1	V_{DDQ}	V_{DD}	V_{DDQ}	V_{DD}
B	V_{SS}	NU_{IO}	V_{SS}	NU_{I}	MVQ	MCL	NC (RSVD)	MCL (SIOM)	PZT0	NU_{I}	V_{SS}	DQ0	V_{SS}
C	DQ17	V_{DDQ}	NU_{I}	V_{DDQ}	V_{SS}	SA	V_{DD}	SA	V_{SS}	V_{DDQ}	NU_{I}	V_{DDQ}	NU_{IO}
D	V_{SS}	NU_{IO}	V_{SS}	NU_{I}	SA	V_{DDQ}	SA	V_{DDQ}	SA	NU_{I}	V_{SS}	DQ1	V_{SS}
E	DQ16	V_{DDQ}	NU_{I}	V_{DD}	V_{SS}	SA	V_{SS}	SA	V_{SS}	V_{DD}	NU_{I}	V_{DDQ}	NU_{IO}
F	V_{SS}	NU_{IO}	V_{SS}	NU_{I}	SA	V_{DD}	V_{DDQ}	V_{DD}	SA	NU_{I}	V_{SS}	DQ2	V_{SS}
G	DQ15	NU_{IO}	NU_{I}	NU_{I}	V_{SS}	SA	MZT1	SA	V_{SS}	NU_{I}	NU_{I}	DQ3	NU_{IO}
H	DQ14	V_{DDQ}	NU_{I}	V_{DDQ}	SA	V_{DDQ}	R/$\overline{W}$	V_{DDQ}	SA	V_{DDQ}	NU_{I}	V_{DDQ}	NU_{IO}
J	V_{SS}	NU_{IO}	V_{SS}	NU_{I}	V_{SS}	SA	V_{SS}	SA	V_{SS}	NU_{I}	V_{SS}	DQ4	V_{SS}
K	CQ1	V_{DDQ}	V_{REF}	V_{DD}	KD1	V_{DD}	CK	V_{DD}	KD0	V_{DD}	V_{REF}	V_{DDQ}	CQ0
L	$\overline{CQ}$1	V_{SS}	QVLD1	V_{SS}	$\overline{KD}$1	V_{DDQ}	$\overline{CK}$	V_{DDQ}	$\overline{KD}$0	V_{SS}	QVLD0	V_{SS}	$\overline{CQ}$0
M	V_{SS}	DQ13	V_{SS}	NU_{I}	V_{SS}	SA	V_{SS}	SA	V_{SS}	NU_{I}	V_{SS}	NU_{IO}	V_{SS}
N	NU_{IO}	V_{DDQ}	NU_{I}	V_{DDQ}	DLL	V_{DDQ}	$\overline{LD}$	V_{DDQ}	MCH	V_{DDQ}	NU_{I}	V_{DDQ}	DQ5
P	NU_{IO}	DQ12	NU_{I}	NU_{I}	V_{SS}	SA	MZT0	SA	V_{SS}	NU_{I}	NU_{I}	NU_{IO}	DQ6
R	V_{SS}	DQ11	V_{SS}	NU_{I}	MCH	V_{DD}	V_{DDQ}	V_{DD}	RST	NU_{I}	V_{SS}	NU_{IO}	V_{SS}
T	NU_{IO}	V_{DDQ}	NU_{I}	V_{DD}	V_{SS}	SA	V_{SS}	SA	V_{SS}	V_{DD}	NU_{I}	V_{DDQ}	DQ7
U	V_{SS}	DQ10	V_{SS}	NU_{I}	NC (576 Mb)	V_{DDQ}	NC (RSVD)	V_{DDQ}	NC (1152 Mb)	NU_{I}	V_{SS}	NU_{IO}	V_{SS}
V	NU_{IO}	V_{DDQ}	NU_{I}	V_{DDQ}	V_{SS}	SA (x18)	V_{DD}	SA (B2)	V_{SS}	V_{DDQ}	NU_{I}	V_{DDQ}	DQ8
W	V_{SS}	DQ9	V_{SS}	NU_{I}	TCK	MCL	NC (RSVD)	MCL	TMS	NU_{I}	V_{SS}	NU_{IO}	V_{SS}
Y	V_{DD}	V_{DDQ}	V_{DD}	V_{DDQ}	TDO	ZT	NC (RSVD)	MCL	TDI	V_{DDQ}	V_{DD}	V_{DDQ}	V_{DD}

Notes:
1. Pins 6B, 6W, 7A, 8W, and 8Y must be tied Low in this device.
2. Pins 5R and 9N must be tied High in this device.
3. Pin 6A is defined as mode pin CFG in the pinout standard. It must be tied High in this device to select x18 configuration.
4. Pin 8B is defined as mode pin SIOM in the pinout standard. It must be tied Low in this device to select Common I/O configuration.
5. Pin 6V is defined as address pin SA for x18 devices. It is used in this device.
6. Pin 8V is defined as address pin SA for B2 devices. It is used in this device.
7. Pin 5U is reserved as address pin SA for 576 Mb devices. It is a true no connect in this device.
8. Pin 9U is reserved as address pin SA for 1152 Mb devices. It is a true no connect in this device.

 © 2014, GSI Technology

Specifications cited are subject to change without notice. For latest documentation see http://www.gsitechnology.com.

8M x 36 Pinout (Top View)

	1	2	3	4	5	6	7	8	9	10	11	12	13
A	V_{DD}	V_{DDQ}	V_{DD}	V_{DDQ}	NC (RSVD)	MCL (CFG)	MCL	ZQ	PZT1	V_{DDQ}	V_{DD}	V_{DDQ}	V_{DD}
B	V_{SS}	DQ35	V_{SS}	NU_I	MVQ	MCL	NC (RSVD)	MCL (SIOM)	PZT0	NU_I	V_{SS}	DQ0	V_{SS}
C	DQ26	V_{DDQ}	NU_I	V_{DDQ}	V_{SS}	SA	V_{DD}	SA	V_{SS}	V_{DDQ}	NU_I	V_{DDQ}	DQ9
D	V_{SS}	DQ34	V_{SS}	NU_I	SA	V_{DDQ}	SA	V_{DDQ}	SA	NU_I	V_{SS}	DQ1	V_{SS}
E	DQ25	V_{DDQ}	NU_I	V_{DD}	V_{SS}	SA	V_{SS}	SA	V_{SS}	V_{DD}	NU_I	V_{DDQ}	DQ10
F	V_{SS}	DQ33	V_{SS}	NU_I	SA	V_{DD}	V_{DDQ}	V_{DD}	SA	NU_I	V_{SS}	DQ2	V_{SS}
G	DQ24	DQ32	NU_I	NU_I	V_{SS}	SA	MZT1	SA	V_{SS}	NU_I	NU_I	DQ3	DQ11
H	DQ23	V_{DDQ}	NU_I	V_{DDQ}	SA	V_{DDQ}	R/$\overline{W}$	V_{DDQ}	SA	V_{DDQ}	NU_I	V_{DDQ}	DQ12
J	V_{SS}	DQ31	V_{SS}	NU_I	V_{SS}	SA	V_{SS}	SA	V_{SS}	NU_I	V_{SS}	DQ4	V_{SS}
K	CQ1	V_{DDQ}	V_{REF}	V_{DD}	KD1	V_{DD}	CK	V_{DD}	KD0	V_{DD}	V_{REF}	V_{DDQ}	CQ0
L	$\overline{CQ}$1	V_{SS}	QVLD1	V_{SS}	$\overline{KD}$1	V_{DDQ}	$\overline{CK}$	V_{DDQ}	$\overline{KD}$0	V_{SS}	QVLD0	V_{SS}	$\overline{CQ}$0
M	V_{SS}	DQ22	V_{SS}	NU_I	V_{SS}	SA	V_{SS}	SA	V_{SS}	NU_I	V_{SS}	DQ13	V_{SS}
N	DQ30	V_{DDQ}	NU_I	V_{DDQ}	DLL	V_{DDQ}	$\overline{LD}$	V_{DDQ}	MCH	V_{DDQ}	NU_I	V_{DDQ}	DQ5
P	DQ29	DQ21	NU_I	NU_I	V_{SS}	SA	MZT0	SA	V_{SS}	NU_I	NU_I	DQ14	DQ6
R	V_{SS}	DQ20	V_{SS}	NU_I	MCH	V_{DD}	V_{DDQ}	V_{DD}	RST	NU_I	V_{SS}	DQ15	V_{SS}
T	DQ28	V_{DDQ}	NU_I	V_{DD}	V_{SS}	SA	V_{SS}	SA	V_{SS}	V_{DD}	NU_I	V_{DDQ}	DQ7
U	V_{SS}	DQ19	V_{SS}	NU_I	NC (576 Mb)	V_{DDQ}	NC (RSVD)	V_{DDQ}	NC (1152 Mb)	NU_I	V_{SS}	DQ16	V_{SS}
V	DQ27	V_{DDQ}	NU_I	V_{DDQ}	V_{SS}	NU_I (x18)	V_{DD}	SA (B2)	V_{SS}	V_{DDQ}	NU_I	V_{DDQ}	DQ8
W	V_{SS}	DQ18	V_{SS}	NU_I	TCK	MCL	NC (RSVD)	MCL	TMS	NU_I	V_{SS}	DQ17	V_{SS}
Y	V_{DD}	V_{DDQ}	V_{DD}	V_{DDQ}	TDO	ZT	NC (RSVD)	MCL	TDI	V_{DDQ}	V_{DD}	V_{DDQ}	V_{DD}

Notes:
1. Pins 6B, 6W, 7A, 8W, and 8Y must be tied Low in this device.
2. Pins 5R and 9N must be tied High in this device.
3. Pin 6A is defined as mode pin CFG in the pinout standard. It must be tied Low in this device to select x36 configuration.
4. Pin 8B is defined as mode pin SIOM in the pinout standard. It must be tied Low in this device to select Common I/O configuration.
5. Pin 6V is defined as address pin SA for x18 devices. It is unused in this device, and must be left unconnected or driven Low.
6. Pin 8V is defined as address pin SA for B2 devices. It is used in this device.
7. Pin 5U is reserved as address pin SA for 576 Mb devices. It is a true no connect in this device.
8. Pin 9U is reserved as address pin SA for 1152 Mb devices. It is a true no connect in this device.

 © 2014, GSI Technology

Specifications cited are subject to change without notice. For latest documentation see http://www.gsitechnology.com.

Pin Description

Symbol	Description	Type
SA	**Address** — Read or Write Address is registered on ↑CK.	Input
DQ[35:0]	**Write/Read Data** — Registered on ↑KD and ↑$\overline{KD}$ during Write operations; aligned with ↑CQ and ↑$\overline{CQ}$ during Read operations. DQ[17:0] - x18 and x36. DQ[35:18] - x36 only.	I/O
QVLD[1:0]	**Read Data Valid** — Driven high one half cycle before valid Read Data.	Output
CK, $\overline{CK}$	**Primary Input Clocks** — Dual single-ended. Used for latching address and control inputs, for internal timing control, and for output timing control.	Input
KD[1:0], $\overline{KD}$[1:0]	**Write Data Input Clocks** — Dual single-ended. Used for latching write data inputs. KD0, $\overline{KD}$0: latch Write Data (DQ[17:0] in x36, DQ[8:0] in x18). KD1, $\overline{KD}$1: latch Write Data (DQ[35:18] in x36, DQ[17:9] in x18).	Input
CQ[1:0], $\overline{CQ}$[1:0]	**Read Data Output Clocks** — Free-running output (echo) clocks, tightly aligned with read data outputs. Facilitate source-synchronous operation.	Output
$\overline{LD}$	**Load Enable** — Registered on↑CK. $\overline{LD}$ = 0: Loads a new address and initiates a Read or Write operation. $\overline{LD}$ = 1: Initiates a NOP operation.	Input
R/$\overline{W}$	**Read / Write Enable** — Registered on ↑CK. R/$\overline{W}$ = 0: initiates a Write operation when $\overline{LD}$ = 0. R/$\overline{W}$ = 1: initiates a Read operation when $\overline{LD}$ = 0.	Input
DLL	**DLL Enable** — Weakly pulled High internally. DLL = 0: disables internal DLL. DLL = 1: enables internal DLL.	Input
RST	**Reset** — Holds the device inactive and resets the device to its initial power-on state when asserted High. Weakly pulled Low internally.	Input
ZQ	**Driver Impedance Control Resistor Input** — Must be connected to V_{SS} through an external resistor RQ to program driver impedance.	Input
ZT	**ODT Impedance Control Resistor Input** — Must be connected to V_{SS} through an external resistor RT to program ODT impedance.	Input
MZT[1:0]	**ODT Mode Select** — Set the ODT state globally for all input groups. Must be tied High or Low. MZT[1:0] = 00: disables ODT on all input groups, regardless of PZT[1:0]. MZT[1:0] = 01: enables strong ODT on select input groups, as specified by PZT[1:0]. MZT[1:0] = 10: enables weak ODT on select input groups, as specified by PZT[1:0]. MZT[1:0] = 11: reserved.	Input
PZT[1:0]	**ODT Configuration Select** — Set the ODT state for various combinations of input groups when MZT[1:0] = 01 or 10. Must be tied High or Low. PZT[1:0] = 00: enables ODT on write data only. PZT[1:0] = 01: enables ODT on write data and input clocks. PZT[1:0] = 10: enables ODT on write data, address, and control. PZT[1:0] = 11: enables ODT on write data, input clocks, address, and control.	Input

 © 2014, GSI Technology

Specifications cited are subject to change without notice. For latest documentation see http://www.gsitechnology.com.

Symbol	Description	Type
MVQ	**I/O Voltage Select** — Indicates what voltage is supplied to the V_{DDQ} pins. Must be tied High or Low. MVQ = 0: Configure for 1.2V or 1.3V nominal V_{DDQ}. MVQ = 1: Configure for 1.5V nominal V_{DDQ}.	Input
V_{DD}	**Core Power Supply**	—
V_{DDQ}	**I/O Power Supply**	—
V_{REF}	**Input Reference Voltage** — Input buffer reference voltage.	—
V_{SS}	**Ground**	—
TCK	**JTAG Clock** — Weakly pulled Low internally.	Input
TMS	**JTAG Mode Select** — Weakly pulled High internally.	Input
TDI	**JTAG Data Input** — Weakly pulled High internally.	Input
TDO	**JTAG Data Output**	Output
MCH	**Must Connect High** — May be tied to V_{DDQ} directly or via a 1kΩ resistor.	Input
MCL	**Must Connect Low** — May be tied to V_{SS} directly or via a 1kΩ resistor.	Input
NC	**No Connect** — There is no internal chip connection to these pins. They may be left unconnected, or tied/driven High or Low.	—
NU_I	**Not Used Input** — There is an internal chip connection to these input pins, but they are unused by the device. They are pulled Low internally. They may be left unconnected or tied/driven Low. They should not be tied/driven High.	Input
NU_{IO}	**Not Used Input/Output** — There is an internal chip connection to these I/O pins, but they are unused by the device. The drivers are tri-stated internally. They are pulled Low internally. They may be left unconnected or tied/driven Low. They should not be tied/driven High.	I/O

 © 2014, GSI Technology
Specifications cited are subject to change without notice. For latest documentation see http://www.gsitechnology.com.

Power-Up and Reset Requirements

For reliability purposes, power supplies must power up simultaneously, or in the following sequence:
V_{SS}, V_{DD}, V_{DDQ}, V_{REF} and inputs.
Power supplies must power down simultaneously, or in the reverse sequence.

After power supplies power up, the following start-up sequence must be followed.

Step 1 (Recommended, but not required): Assert RST High for at least 1ms.
While RST is asserted high:
• The DLL is disabled.
• The states of $\overline{LD}$, and R/$\overline{W}$ control inputs are ignored.

Note: If possible, RST should be asserted High before input clocks begin toggling, and remain asserted High until input clocks are stable and toggling within specification, in order to prevent unstable, out-of-spec input clocks from causing trouble in the SRAM.

Step 2: Begin toggling input clocks.
After input clocks begin toggling, but not necessarily within specification:
• DQ are placed in the non-Read state, and remain so until the first Read operation.
• QVLD are driven Low, and remain so until the first Read operation.
• CQ, $\overline{CQ}$ begin toggling, but not necessarily within specification.

Step 3: Wait until input clocks are stable and toggling within specification.

Step 4: De-assert RST Low (if asserted High).

Step 5: Wait at least 160K (163,840) cycles.
During this time:
• Driver and ODT impedances are calibrated. Can take up to 160K cycles.

Note: The DLL pin may be asserted High or de-asserted Low during this time. If asserted High, DLL synchronization begins immediately after the driver and ODT impedances are calibrated. If de-asserted Low, DLL synchronization begins after the DLL pin is asserted High (see Step 6). In either case, Step 7 must follow thereafter.

Step 6: Assert DLL pin High (if de-asserted Low).

Step 7: Wait at least 64K (65,536) cycles for the DLL to lock.
After the DLL has locked:
• CQ, $\overline{CQ}$ begin toggling within specification.

Step 8: Begin initiating Read and Write operations.

Reset Usage

Although not generally recommended, RST may be asserted High at any time after completion of the initial power-up sequence described above, to reset the SRAM control logic to its initial power-on state. However, whenever RST is subsequently de-asserted Low (as in Step 4 above), Steps 5~7 above must be followed before Read and Write operations are initiated.

Note: Memory array content may be perturbed/corrupted when RST is asserted High.

 © 2014, GSI Technology
Specifications cited are subject to change without notice. For latest documentation see http://www.gsitechnology.com.

DLL Operation

A DLL is implemented in these devices to control all output timing. It uses the CK input clock as a source, and is enabled when all of the following conditions are met:

1. RST is de-asserted Low, and
2. The DLL pin is asserted High, and
3. CK cycle time ≤ t_{KHKH} (max), as specified in the AC Timing Specifications section.

Once enabled, the DLL requires 64K stable clock cycles in order to lock/synchronize properly.

When the DLL is enabled, it aligns output clocks and read data to input clocks, and it generates all mid-cycle output timing. See the Output Timing section for more information.

The DLL can tolerate changes in input clock frequency due to clock jitter (i.e. such jitter will not cause the DLL to lose lock/ synchronization), provided the cycle-to-cycle jitter does not exceed 200ps (see "t_{KJITcc}" in the AC Timing Specifications section for more information). However, the DLL must be resynchronized (i.e. disabled and then re-enabled) whenever the nominal input clock frequency is changed.

The DLL is disabled when any of the following conditions are met:

1. RST is asserted High, or
2. The DLL pin is de-asserted Low, or
3. CK is stopped for at least 30ns, or CK cycle time ≥ 30ns.

Clock Truth Table

SA	$\overline{LD}$	R/$\overline{W}$	Current Operation	DQ (D)		DQ (Q)	
↑CK (t_n)	↑CK (t_n)	↑CK (t_n)	(t_n)	↑KD (t_{n+1})	↑$\overline{KD}$ ($t_{n+1½}$)	↑CQ (t_{n+3})	↑$\overline{CQ}$ ($t_{n+3½}$)
V	1	X	NOP	X	X	Hi-Z / other	
V	0	0	Write	D1	D2	Hi-Z / other	
V	0	1	Read	X	X	Q1	Q2

Notes:
1. 1 = High 0 = Low; V = Valid; X = don't care.
2. D1 and D2 indicate the first and second pieces of Write Data transferred during Write operations.
3. Q1 and Q2 indicate the first and second pieces of Read Data transferred during Read operations.
4. When DQ ODT is disabled, DQ pins are tri-stated for one cycle in response to NOP and Write commands, 3 cycles after the command is sampled. See the DQ ODT Control section below for how the state of the DQ pins is controlled when DQ ODT is enabled.

 © 2014, GSI Technology
Specifications cited are subject to change without notice. For latest documentation see http://www.gsitechnology.com.

DQ ODT Control

A robust methodology has been developed for these devices for controlling when DQ ODT is enabled and disabled during Write-to-Read and Read-to-Write transitions. Specifically, the methodology can ensure that the DQ bus is never pulled to $V_{DDQ}/2$ by the SRAM ODT and/or by the controller ODT during the transitions (or at any other time). Such a condition is best avoided, because if an input signal is pulled to $V_{DDQ}/2$ (i.e. to V_{REF} - the switch point of the diff-amp receiver), it could cause the receiver to enter a meta-stable state and consume more power than it normally would otherwise. This could result in the device's operating currents being higher than specified.

The fundamental concept of the methodology is - both the SRAM and the controller drive the DQ bus Low (with DQ ODT disabled) at all times except:

1. When a particular device is driving the DQ bus with valid data, and
2. From shortly before to shortly after a particular device is receiving valid data on the DQ bus, during which time the receiving device enables its DQ ODT.

And, during Write-to-Read and Read-to-Write transitions, each device enables and disables its DQ ODT while the other device is driving DQ Low, thereby ensuring that the DQ bus is never pulled to $V_{DDQ}/2$.

Note: This methodology also reduces power consumption, since there will be no DC current through either device's DQs when both devices are driving Low.

In order for this methodology to work as described, the controller must have the ability to:

1. Place the SRAM into "DQ Drive Low Mode" at the appropriate times (i.e. before and after the SRAM drives read data), and
2. Place the SRAM into "DQ ODT Mode" at the appropriate times (i.e. before, during, and after the SRAM receives write data).

That ability is provided via the existing R/$\overline{W}$ control pin.

When the SRAM samples R/$\overline{W}$ High (regardless of the state of $\overline{LD}$), it disables its DQ ODT, and drives the DQ bus Low except while driving valid read data in response to Read operations.

When the SRAM samples R/$\overline{W}$ Low (regardless of the state of $\overline{LD}$), it disables its DQ drivers, and enables its DQ ODT.

Note that NOPs initiated with R/$\overline{W}$ High and $\overline{LD}$ High are referred to as "NOPr" operations.
Note that NOPs initiated with R/$\overline{W}$ Low and $\overline{LD}$ High are referred to as "NOPw" operations.

This extended definition of the R/$\overline{W}$ control pin allows the controller to:
- Place the SRAM in DQ ODT Mode, via NOPw operations, before initiating Write operations.
- Keep the SRAM in DQ ODT Mode, via NOPw operations, after initiating Write operations.
- Place the SRAM in DQ Drive Low Mode, via NOPr operations, before initiating Read operations.
- Keep the SRAM in DQ Drive Low Mode, via NOPr operations, after initiating Read operations.

Operation Sequence Rule

Because of how R/$\overline{W}$ is used to control the state of the DQs, when a Read operation is initiated in cycle "n", R/$\overline{W}$ must be driven "high" in cycle "n+1" (i.e. a Read operation must always be followed by a Read or NOPr operation) in order to ensure that the DQ state in cycle "n+1" is "Read Data".

 © 2014, GSI Technology
Specifications cited are subject to change without notice. For latest documentation see http://www.gsitechnology.com.

DQ Clock Truth Table

In the Truth Table below, gray shading indicates invalid operation sequences; they violate the Operation Sequence Rule.

$\overline{LD}$	R/$\overline{W}$	Prior Operation	Current Operation	Future Operation	DQ State	
↑CK (t_n)	↑CK (t_n)	(t_{n-1})	(t_n)	(t_{n+1})	↑CK (t_{n+2})	↑CK (t_{n+3})
1	0	Read	NOPw	Write or NOPw	Undefined	Terminated
				Read or NOPr		0
		NOPw, NOPr, or Write	NOPw	Write or NOPw	Terminated	Terminated
				Read or NOPr		0
1	1	Read	NOPr	Write or NOPw	Read Data	Terminated
				Read or NOPr		0
		NOPw, NOPr, or Write	NOPr	Write or NOPw	0	Terminated
				Read or NOPr		0
0	0	Read	Write	Write or NOPw	Undefined	Terminated
				Read or NOPr		0
		NOPw, NOPr, or Write	Write	Write or NOPw	Terminated	Terminated
				Read or NOPr		0
0	1	Read	Read	Write or NOPw	Read Data	Undefined
			Read	Read or NOPr		Read Data
		NOPw, NOPr, or Write	Read	Write or NOPw	0	Undefined
			Read	Read or NOPr		Read Data

Note: 1 = High; 0 = Low; X = don't care.

 © 2014, GSI Technology

Specifications cited are subject to change without notice. For latest documentation see http://www.gsitechnology.com.

NOPr and NOPw Requirements

The number of NOPw and NOPr needed during Write -> Read transitions, and the number of NOPr and NOPw needed during Read -> Write transitions, are as follows:

Write -> Read Transition				Read -> Write Transition			
NOPw (after Write)		NOPr (before Read)		NOPr (after Read)		NOPw (before Write)	
min	typ	min	typ	min	typ	min	typ
0	0	0	1	2	3	2	3

Notes:

1. Min NOPw after Write (0) ensures that the SRAM disables DQ ODT 2.5 cycles after it latches the last piece of write data. Typ NOPw is the same as Min NOPw because it is sufficient to ensure that the controller stops driving the last piece of write data before SRAM DQ ODT disable reaches it (as the result of a subsequent NOPr or Read), regardless of SRAM tKQ, prop delay between SRAM and controller, and operating frequency.
2. Min NOPr before Read (0) ensures that the SRAM drives Low 1 cycle before it begins driving the first piece of read data. Typ NOPr is greater than Min NOPr in order to ensure that the controller enables DQ ODT after SRAM Low drive reaches it (and before the SRAM drives the first piece of read data), accounting for SRAM tKQ, prop delay between SRAM and controller, and operating frequency.
3. Min NOPr after Read (2) ensures that the SRAM drives Low for 1 cycle after it stops driving the last piece of read data and before it enables DQ ODT (as the result of a subsequent NOPw). Typ NOPr is greater than Min NOPr in order to ensure that the controller disables DQ ODT after SRAM Low drive reaches is (and before the SRAM enables DQ ODT), accounting for SRAM tKQ, prop delay between SRAM and controller, and operating frequency.
4. Min NOPw before Write (2) ensures that the SRAM enables DQ ODT 1 cycle before it latches the first piece of write data. Typ NOPw is greater than Min NOPw in order to ensure that the controller begins driving the first piece of write data after SRAM DQ ODT enable reaches it, accounting for SRAM tKQ, prop delay between SRAM and controller, and operating frequency.

DQ ODT Control Timing Diagram

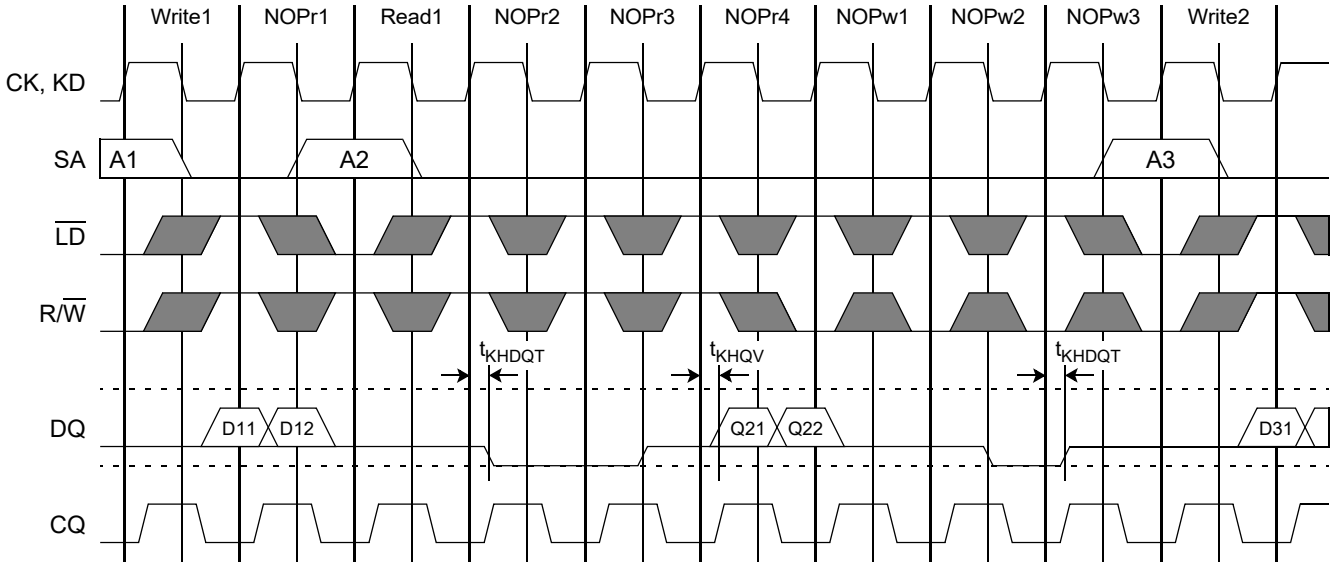

Note: In the diagram above, the controller is disabling its DQ ODT except from the middle of NOPr3 to the middle of NOPw2. And while it is disabling its DQ ODT, the controller is driving DQ Low when it isn't driving write data. Whereas, the SRAM is enabling its DQ ODT except from the beginning of NOPr2 to the beginning of NOPw3. And while it is disabling its DQ ODT, the SRAM is driving DQ Low when it isn't driving read data.

 © 2014, GSI Technology

Specifications cited are subject to change without notice. For latest documentation see http://www.gsitechnology.com.

Input Timing

These devices utilize three pairs of positive and negative input clocks, CK & $\overline{CK}$ and KD[1:0] & $\overline{KD}$[1:0], to latch the various synchronous inputs. Specifically:

↑CK latches all address (SA) inputs.

↑CK latches all control ($\overline{LD}$, R/$\overline{W}$) inputs.

↑KD[1:0] and ↑$\overline{KD}$[1:0] latch particular write data (DQ) inputs, as follows:

- ↑KD0 and ↑$\overline{KD}$0 latch DQ[17:0] in x36, and DQ[8:0] in x18.
- ↑KD1 and ↑$\overline{KD}$1 latch DQ[35:18] in x36, and DQ[17:9] in x18.

Output Timing

These devices provide two pairs of positive and negative output clocks (aka "echo clocks"), CQ[1:0] & $\overline{CQ}$[1:0], whose timing is tightly aligned with read data in order to enable reliable source-synchronous data transmission.

These devices utilize a DLL to control output timing. When the DLL is enabled, it generates 0° and 180° phase clocks from ↑CK that control read data output clock (CQ, $\overline{CQ}$), read data (DQ), and read data valid (QVLD) output timing, as follows:

- ↑CK+0° generates ↑CQ[1:0], ↓$\overline{CQ}$[1:0], Q1 active, and Q2 inactive.
- .↑CK+180° generates ↑$\overline{CQ}$[1:0], ↓CQ[1:0], Q1 inactive, Q2 active, and QVLD active/inactive.

Note: Q1 and Q2 indicate the first and second pieces of read data transferred in any given clock cycle during Read operations.

When the DLL is enabled, ↑CQ is aligned to ↑CK. See the AC Timing Specifications for more information.

↑CQ[1:0] and ↑$\overline{CQ}$[1:0] align with particular DQ and QVLD outputs, as follows:

- ↑CQ0 and ↑$\overline{CQ0}$ align with DQ[17:0], QVLD0 in x36 devices, and DQ[8:0], QVLD0 in x18 devices.
- ↑CQ1 and ↑$\overline{CQ1}$ align with DQ[35:18], QVLD1 in x36 devices, and DQ[17:9], QVLD0 in x18 devices.

 © 2014, GSI Technology

Specifications cited are subject to change without notice. For latest documentation see http://www.gsitechnology.com.

Driver Impedance Control

Programmable Driver Impedance is implemented on the following output signals:

• CQ, $\overline{CQ}$, DQ, QVLD.

Driver impedance is programmed by connecting an external resistor RQ between the ZQ pin and V_{SS}.

Driver impedance is set to the programmed value within 160K cycles after input clocks are operating within specification and RST is de-asserted Low. It is updated periodically thereafter to compensate for temperature and voltage fluctuations in the system.

Output Signal	Pull-Down Impedance (R_{OUTL})	Pull-Up Impedance (R_{OUTH})
CQ, $\overline{CQ}$, DQ, QVLD	RQ*0.2 ± 15%	RQ*0.2 ± 15%

Notes:

1. R_{OUTL} and R_{OUTH} apply when 175Ω ≤ RQ ≤ 225Ω..
2. The mismatch between R_{OUTL} and R_{OUTH} is less than 10%, guaranteed by design.

ODT Impedance Control

Programmable ODT Impedance is implemented on the following input signals:

• CK, $\overline{CK}$, KD, $\overline{KD}$, SA, $\overline{LD}$, R/$\overline{W}$, DQ.

ODT impedance is programmed by connecting an external resistor RT between the ZT pin and V_{SS}.

ODT impedance is set to the programmed value within 160K cycles after input clocks are operating within specification and RST is de-asserted Low. It is updated periodically thereafter to compensate for temperature and voltage fluctuations in the system

Input Signal	PZT[1:0]	MZT[1:0]	Pull-Down Impedance (R_{INL})	Pull-Up Impedance (R_{INH})
CK, $\overline{CK}$, KD, $\overline{KD}$	X0	XX	disabled	disabled
	X1	01	RT ± 15%	RT ± 15%
		10	RT*2 ± 20%	RT*2 ± 20%
SA, $\overline{LD}$, R/$\overline{W}$	0X	XX	disabled	disabled
	1X	01	RT ± 15%	RT ± 15%
		10	RT*2 ± 20%	RT*2 ± 20%
DQ	XX	01	RT ± 15%	RT ± 15%
		10	RT*2 ± 20%	RT*2 ± 20%

Notes:

1. When MZT[1:0] = 00, ODT is disabled on all inputs. MZT[1:0] = 11 is reserved for future use.
2. R_{INL} and R_{INH} apply when 105Ω ≤ RT ≤ 135Ω.
3. The mismatch between R_{INL} and R_{INH} is less than 10%, guaranteed by design.
4. All ODT is disabled during JTAG EXTEST and SAMPLE-Z instructions.

Note: When ODT impedance is enabled on a particular input, that input should always be driven High or Low; it should never be tri-stated (i.e., in a High- Z state). If the input is tri-stated, the ODT will pull the signal to V_{DDQ} / 2 (i.e., to the switch point of the diff-amp receiver), which could cause the receiver to enter a meta-stable state and consume more power than it normally would. This could result in the device's operating currents being higher.

 © 2014, GSI Technology

Specifications cited are subject to change without notice. For latest documentation see http://www.gsitechnology.com.

Absolute Maximum Ratings

Parameter	Symbol	Rating	Units	Notes
Core Supply Voltage	V_{DD}	-0.3 to +1.4	V	
I/O Supply Voltage when MVQ = 0	V_{DDQ}	-0.3 to V_{DD}	V	
I/O Supply Voltage when MVQ = 1	V_{DDQ}	-0.3 to +1.8		
Input Voltage	V_{IN}	-0.3 to V_{DDQ} + 0.3	V	
Maximum Junction Temperature	T_J	125	°C	
Storage Temperature	T_{STG}	-55 to 125	°C	

Note: Permanent damage to the device may occur if the Absolute Maximum Ratings are exceeded. Operation should be restricted to Recommended Operating Conditions. Exposure to conditions exceeding the Recommended Operating Conditions for an extended period of time may affect reliability of this component.

Recommended Operating Conditions

Parameter	Symbol	Min	Typ	Max	Units	Notes
Core Supply Voltage	V_{DD}	1.25	1.3	1.35	V	
I/O Supply Voltage when MVQ = 0	V_{DDQ}	1.15	1.2 or 1.3	V_{DD}	V	
I/O Supply Voltage when MVQ = 1	V_{DDQ}	1.45	1.5	1.55	V	
Commercial Junction Temperature	T_{JC}	0	—	85	°C	
Industrial Junction Temperature	T_{JI}	-40	—	100	°C	

Note: For reliability purposes, power supplies must power up simultaneously, or in the following sequence:

V_{SS}, V_{DD}, V_{DDQ}, V_{REF}, and Inputs.

Power supplies must power down simultaneously, or in the reverse sequence.

Thermal Impedances

Package	θ JA (C°/W) Airflow = 0 m/s	θ JA (C°/W) Airflow = 1 m/s	θ JA (C°/W) Airflow = 2 m/s	θ JB (C°/W)	θ JC (C°/W)
FBGA	12.94	10.47	9.51	2.93	0.33

 © 2014, GSI Technology

Specifications cited are subject to change without notice. For latest documentation see http://www.gsitechnology.com.

I/O Capacitance

Parameter	Symbol	Min	Max	Units	Notes
Input Capacitance	C_{IN}	—	5.0	pF	1, 3
Output Capacitance	C_{OUT}	—	5.5	pF	2, 3

Notes:
1. $V_{IN} = V_{DDQ}/2$.
2. $V_{OUT} = V_{DDQ}/2$.
3. $T_A = 25°C$, f = 1 MHz.

Input Electrical Characteristics - 1.2V or 1.3V I/O (MVQ = 0)

Parameter	Symbol	Min	Typ	Max	Units	Notes
DC Input Reference Voltage	V_{REFdc}	0.48 * V_{DDQ}	0.50 * V_{DDQ}	0.52 * V_{DDQ}	V	—
DC Input High Voltage (HS)	V_{IH1dc}	V_{REF} + 0.08	0.80 * V_{DDQ}	V_{DDQ} + 0.15	V	1, 6
DC Input Low Voltage (HS)	V_{IL1dc}	-0.15	0.20 * V_{DDQ}	V_{REF} - 0.08	V	2, 6
DC Input High Voltage (LS)	V_{IH2dc}	0.75 * V_{DDQ}	V_{DDQ}	V_{DDQ} + 0.15	V	7
DC Input Low Voltage (LS)	V_{IL2dc}	-0.15	0	0.25 * V_{DDQ}	V	7
AC Input Reference Voltage	V_{REFac}	0.47 * V_{DDQ}	0.50 * V_{DDQ}	0.53 * V_{DDQ}	V	3
AC Input High Voltage (HS)	V_{IH1ac}	V_{REF} + 0.15	0.80 * V_{DDQ}	V_{DDQ} + 0.25	V	1, 4~6
AC Input Low Voltage (HS)	V_{IL1ac}	-0.25	0.20 * V_{DDQ}	V_{REF} - 0.15	V	2, 4~6
AC Input High Voltage (LS)	V_{IH2ac}	V_{DDQ} - 0.2	V_{DDQ}	V_{DDQ} + 0.25	V	4, 7
AC Input Low Voltage (LS)	V_{IL2ac}	-0.25	0	0.2	V	4, 7

Notes:
1. "Typ" parameter applies when Controller $R_{OUTH} = 40\Omega$ and SRAM $R_{INH} = R_{INL} = 120\Omega$.
2. "Typ" parameter applies when Controller $R_{OUTL} = 40\Omega$ and SRAM $R_{INH} = R_{INL} = 120\Omega$.
3. V_{REFac} is equal to V_{REFdc} plus noise.
4. V_{IH} max and V_{IL} min apply for pulse widths less than one-quarter of the cycle time.
5. Input rise and fall times must be a minimum of 1V/ns, and within 10% of each other.
6. Parameters apply to High Speed Inputs: CK, $\overline{CK}$, KD, $\overline{KD}$, SA, DQ, $\overline{LD}$, R/$\overline{W}$.
7. Parameters apply to Low Speed Inputs: RST, DLL, MZT, PZT, MVQ.

 © 2014, GSI Technology
Specifications cited are subject to change without notice. For latest documentation see http://www.gsitechnology.com.

Input Electrical Characteristics - 1.5V I/O (MVQ = 1)

Parameter	Symbol	Min	Typ	Max	Units	Notes
DC Input Reference Voltage	V_{REFdc}	0.48 * V_{DDQ}	0.50 * V_{DDQ}	0.52 * V_{DDQ}	V	—
DC Input High Voltage (HS)	V_{IH1dc}	V_{REF} + 0.1	0.80 * V_{DDQ}	V_{DDQ} + 0.15	V	1, 6
DC Input Low Voltage (HS)	V_{IL1dc}	-0.15	0.20 * V_{DDQ}	V_{REF} - 0.1	V	2, 6
DC Input High Voltage (LS)	V_{IH2dc}	0.75 * V_{DDQ}	V_{DDQ}	V_{DDQ} + 0.15	V	7
DC Input Low Voltage (LS)	V_{IL2dc}	-0.15	0	0.25 * V_{DDQ}	V	7
AC Input Reference Voltage	V_{REFac}	0.47 * V_{DDQ}	0.50 * V_{DDQ}	0.53 * V_{DDQ}	V	3
AC Input High Voltage (HS)	V_{IH1ac}	V_{REF} + 0.2	0.80 * V_{DDQ}	V_{DDQ} + 0.25	V	1, 4~6
AC Input Low Voltage (HS)	V_{IL1ac}	-0.25	0.20 * V_{DDQ}	V_{REF} - 0.2	V	2, 4~6
AC Input High Voltage (LS)	V_{IH2ac}	V_{DDQ} - 0.2	V_{DDQ}	V_{DDQ} + 0.25	V	4, 7
AC Input Low Voltage (LS)	V_{IL2ac}	-0.25	0	0.2	V	4, 7

Notes:

1. "Typ" parameter applies when Controller R_{OUTH} = 40Ω and SRAM R_{INH} = R_{INL} = 120Ω.
2. "Typ" parameter applies when Controller R_{OUTL} = 40Ω and SRAM R_{INH} = R_{INL} = 120Ω.
3. V_{REFac} is equal to V_{REFdc} plus noise.
4. V_{IH} max and V_{IL} min apply for pulse widths less than one-quarter of the cycle time.
5. Input rise and fall times must be a minimum of 1V/ns, and within 10% of each other.
6. Parameters apply to High Speed Inputs: CK, $\overline{CK}$, KD, $\overline{KD}$, SA, DQ, $\overline{LD}$, R/$\overline{W}$.
7. Parameters apply to Low Speed Inputs: RST, DLL, MZT, PZT, MVQ.

Output Electrical Characteristics

Parameter	Symbol	Min	Typ	Max	Units	Notes
DC Output High Voltage	V_{OHdc}	—	0.80 * V_{DDQ}	V_{DDQ} + 0.15	V	1, 3
DC Output Low Voltage	V_{OLdc}	-0.15	0.20 * V_{DDQ}	—	V	2, 3
AC Output High Voltage	V_{OHac}	—	0.80 * V_{DDQ}	V_{DDQ} + 0.25	V	1, 3
AC Output Low Voltage	V_{OLac}	-0.25	0.20 * V_{DDQ}	—	V	2, 3

Note:

1. "Typ" parameter applies when SRAM R_{OUTH} = 40Ω and Controller R_{INH} = R_{INL} = 120Ω.
2. "Typ" parameter applies when SRAM R_{OUTL} = 40Ω and Controller R_{INH} = R_{INL} = 120Ω.
3. Parameters apply to: CQ, $\overline{CQ}$, DQ, QVLD.

 © 2014, GSI Technology

Specifications cited are subject to change without notice. For latest documentation see http://www.gsitechnology.com.

Leakage Currents

Parameter	Symbol	Min	Max	Units	Notes
Input Leakage Current	I_{LI1}	-2	2	uA	1, 2
	I_{LI2}	-20	2	uA	1, 3
	I_{LI3}	-2	20	uA	1, 4
Output Leakage Current	I_{LO}	-2	2	uA	5, 6

Notes:

1. $V_{IN} = V_{SS}$ to V_{DDQ}.
2. Parameters apply to CK, $\overline{CK}$, KD, $\overline{KD}$, SA, DQ, $\overline{LD}$, R/$\overline{W}$ when ODT is disabled.
   Parameters apply to MZT, PZT, MVQ.
3. Parameters apply to DLL, TMS, TDI (weakly pulled up).
4. Parameters apply to RST, TCK (weakly pulled down).
5. $V_{OUT} = V_{SS}$ to V_{DDQ}.
6. Parameters apply to CQ, $\overline{CQ}$, DQ, QVLD, TDO.

Operating Currents

Parameter	Symbol	V_{DD} (nom)	500 MHz	550 MHz	625 MHz	675 MHz	Units
x18 Operating Current	I_{DD}	1.3V	810	870	960	1020	mA
x36 Operating Current	I_{DD}	1.3V	840	900	1000	1060	mA

Notes:

1. I_{OUT} = 0 mA; $V_{IN} = V_{IH}$ or V_{IL}.
2. Applies at 50% Reads + 50% Writes.

 © 2014, GSI Technology

Specifications cited are subject to change without notice. For latest documentation see http://www.gsitechnology.com.

AC Test Conditions - 1.2V I/O (MVQ = 0)

Parameter	Symbol	Conditions	Units
Core Supply Voltage	V_{DD}	1.25 to 1.35	V
I/O Supply Voltage	V_{DDQ}	1.15 to 1.25	V
Input Reference Voltage	V_{REF}	0.6	V
Input High Level	V_{IH}	0.9	V
Input Low Level	V_{IL}	0.3	V
Input Rise and Fall Time	—	2.0	V/ns
Input and Output Reference Level	—	0.6	V

Note: Output Load Conditions RQ = 200Ω. Refer to figure below.

AC Test Conditions - 1.5V I/O (MVQ = 1)

Parameter	Symbol	Conditions	Units
Core Supply Voltage	V_{DD}	1.25 to 1.35	V
I/O Supply Voltage	V_{DDQ}	1.45 to 1.55	V
Input Reference Voltage	V_{REF}	0.75	V
Input High Level	V_{IH}	1.25	V
Input Low Level	V_{IL}	0.25	V
Input Rise and Fall Time	—	2.0	V/ns
Input and Output Reference Level	—	0.75	V

Note: Output Load Conditions RQ = 200Ω. Refer to figure below.

AC Test Output Load

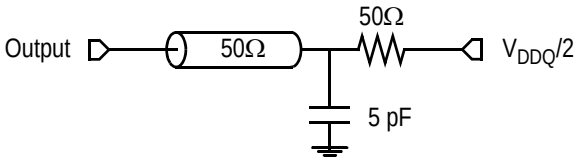

 © 2014, GSI Technology

Specifications cited are subject to change without notice. For latest documentation see http://www.gsitechnology.com.

AC Timing Specifications (independent of device speed grade)

Parameter	Symbol	Min	Max	Units	Notes
Input Clock Timing					
Clk High Pulse Width	t_{KHKL}	0.45	—	cycles	1
Clk Low Pulse Width	t_{KLKH}	0.45	—	cycles	1
Clk High to $\overline{\text{Clk}}$ High	$t_{KH\overline{K}H}$	0.45	0.55	cycles	2
Clk High to Write Data Clk High	t_{KHKDH}	-200	+200	ps	3
Clk Cycle-to-Cycle Jitter	t_{KJITcc}	—	60	ps	1,4,5
DLL Lock Time	t_{Klock}	65,536	—	cycles	6
Clk Static to DLL Reset	t_{Kreset}	30	—	ns	7,12
Output Timing					
Clk High to Output Valid / Hold	$t_{KHQV/X}$	-0.4	+0.4	ns	8
Clk High to Output State Transition	t_{KHDQT}	-0.4	+0.4	ns	8
Clk High to Echo Clock High	t_{KHCQH}	-0.4	+0.4	ns	9
Echo Clk High to Output Valid / Hold	$t_{CQHQV/X}$	-150	+150	ps	10,12
Echo Clk High to $\overline{\text{Echo Clock}}$ High	$t_{CQH\overline{CQ}H}$	$t_{KH\overline{K}H}$ (min) - 100	$t_{KH\overline{K}H}$ (max) + 100	ps	11,12

Notes:

All parameters are measured from the mid-point of the object signal to the mid-point of the reference signal.

1. Parameters apply to CK, $\overline{\text{CK}}$, KD, $\overline{\text{KD}}$.
2. Parameter specifies ↑CK → ↑$\overline{\text{CK}}$ and ↑KD → ↑$\overline{\text{KD}}$ requirements.
3. Parameter specifies ↑CK → ↑KD and ↑$\overline{\text{CK}}$ → ↑$\overline{\text{KD}}$ requirements.
4. Parameter specifies *Cycle-to-Cycle (C2C) Jitter* (i.e. the maximum variation from clock rising edge to the next clock rising edge). As such, it limits *Period Jitter* (i.e. the maximum variation in clock cycle time from nominal) to ± 30ps. And as such, it limits *Absolute Jitter* (i.e. the maximum variation in clock rising edge from its nominal position) to ± 15ps.
5. The device can tolerated C2C Jitter greater than 60ps, up to a maximum of 200ps. However, when using a device from a particular speed grade, t_{KHKH} (min) of that speed grade must be derated (increased) by half the difference between the actual C2C Jitter and 60ps. For example, if the actual C2C Jitter is 100ps, then t_{KHKH} (min) for the -675 speed grade is derated to 1.5ns (1.48ns + 0.5*(100ps - 60ps)).
6. V_{DD} slew rate must be < 0.1V DC per 50ns for DLL lock retention. DLL lock time begins once V_{DD} and input clock are stable.
7. Parameter applies to CK.
8. Parameters apply to DQ, and are referenced to ↑CK.
9. Parameter specifies ↑CK → ↑CQ timing.
10. Parameters apply to DQ, QVLD and are referenced to ↑CQ & ↑$\overline{\text{CQ}}$.
11. Parameter specifies ↑CQ → ↑$\overline{\text{CQ}}$ timing.
12. Parameters are not tested. They are guaranteed by design, and verified through extensive corner-lot characterization.

 © 2014, GSI Technology

Specifications cited are subject to change without notice. For latest documentation see http://www.gsitechnology.com.

AC Timing Specifications (variable with device speed grade)

Parameter	Symbol	–675		–625		–550		–500		Units	Notes
		Min	Max	Min	Max	Min	Max	Min	Max		
Input Clock Timing											
Clk Cycle Time	t_{KHKH}	1.48	6.0	1.6	6.0	1.8	6.0	2.0	6.0	ns	1
Input Setup & Hold Timing											
Input Valid to Clk High	t_{IVKH}	150	—	160	—	180	—	200	—	ps	2
Clk High to Input Hold	t_{KHIX}	150	—	160	—	180	—	200	—	ps	

Notes:

All parameters are measured from the mid-point of the object signal to the mid-point of the reference signal.

1. Parameters apply to CK, $\overline{CK}$, KD, $\overline{KD}$.
2. Parameters apply to $\overline{SA}$, and are referenced to ↑CK.
   Parameters apply to $\overline{LD}$, R/$\overline{W}$, and are referenced to ↑CK.
   Parameters apply to DQ, and are referenced to ↑KD & ↑$\overline{KD}$.

 © 2014, GSI Technology

Specifications cited are subject to change without notice. For latest documentation see http://www.gsitechnology.com.

Read and Write Timing Diagram

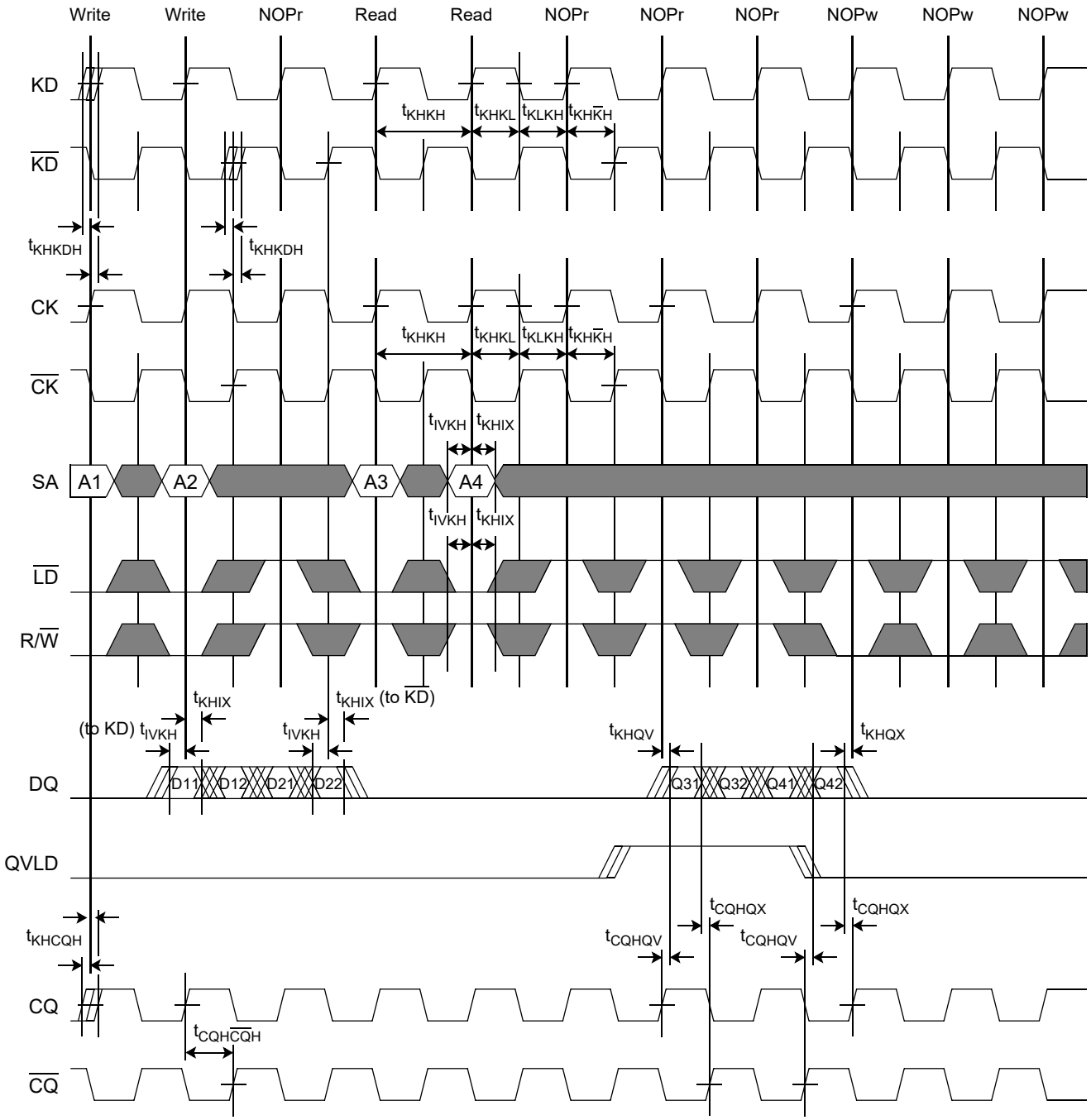

 © 2014, GSI Technology

Specifications cited are subject to change without notice. For latest documentation see http://www.gsitechnology.com.

JTAG Test Mode Description

These devices provide a JTAG Test Access Port (TAP) and Boundary Scan interface using a limited set of IEEE std. 1149.1 functions. This test mode is intended to provide a mechanism for testing the interconnect between master (processor, controller, etc.), SRAM, other components, and the printed circuit board. In conformance with a subset of IEEE std. 1149.1, these devices contain a TAP Controller and multiple TAP Registers. The TAP Registers consist of one Instruction Register and multiple Data Registers.

The TAP consists of the following four signals:

Pin	Pin Name	I/O	Description
TCK	Test Clock	I	Induces (clocks) TAP Controller state transitions.
TMS	Test Mode Select	I	Inputs commands to the TAP Controller. Sampled on the rising edge of TCK.
TDI	Test Data In	I	Inputs data serially to the TAP Registers. Sampled on the rising edge of TCK.
TDO	Test Data Out	O	Outputs data serially from the TAP Registers. Driven from the falling edge of TCK.

Concurrent TAP and Normal SRAM Operation

According to IEEE std. 1149.1, most public TAP Instructions do not disrupt normal device operation. In these devices, the only exceptions are EXTEST and SAMPLE-Z. See the Tap Registers section for more information.

Disabling the TAP

When JTAG is not used, TCK should be tied Low to prevent clocking the SRAM. TMS and TDI should either be tied High through a pull-up resistor or left unconnected. TDO should be left unconnected.

JTAG DC Operating Conditions

Parameter	Symbol	Min	Max	Units	Notes
JTAG Input High Voltage	V_{TIH}	$0.75 * V_{DDQ}$	$V_{DDQ} + 0.15$	V	1
JTAG Input Low Voltage	V_{TIL}	–0.15	$0.25 * V_{DDQ}$	V	1
JTAG Output High Voltage	V_{TOH}	$V_{DDQ} – 0.2$	—	V	2, 3
JTAG Output Low Voltage	V_{TOL}	—	0.2	V	2, 4

Notes:
1. Parameters apply to TCK, TMS, and TDI.
2. Parameters apply to TDO.
3. I_{TOH} = –2.0 mA.
4. I_{TOL} = 2.0 mA.

 © 2014, GSI Technology
Specifications cited are subject to change without notice. For latest documentation see http://www.gsitechnology.com.

JTAG AC Timing Specifications

Parameter	Symbol	Min	Max	Units
TCK Cycle Time	t_{THTH}	50	—	ns
TCK High Pulse Width	t_{THTL}	20	—	ns
TCK Low Pulse Width	t_{TLTH}	20	—	ns
TMS Setup Time	t_{MVTH}	10	—	ns
TMS Hold Time	t_{THMX}	10	—	ns
TDI Setup Time	t_{DVTH}	10	—	ns
TDI Hold Time	t_{THDX}	10	—	ns
Capture Setup Time (Address, Control, Data, Clock)	t_{CS}	10	—	ns
Capture Hold Time (Address, Control, Data, Clock)	t_{CH}	10	—	ns
TCK Low to TDO Valid	t_{TLQV}	—	10	ns
TCK Low to TDO Hold	t_{TLQX}	0	—	ns

JTAG Timing Diagram

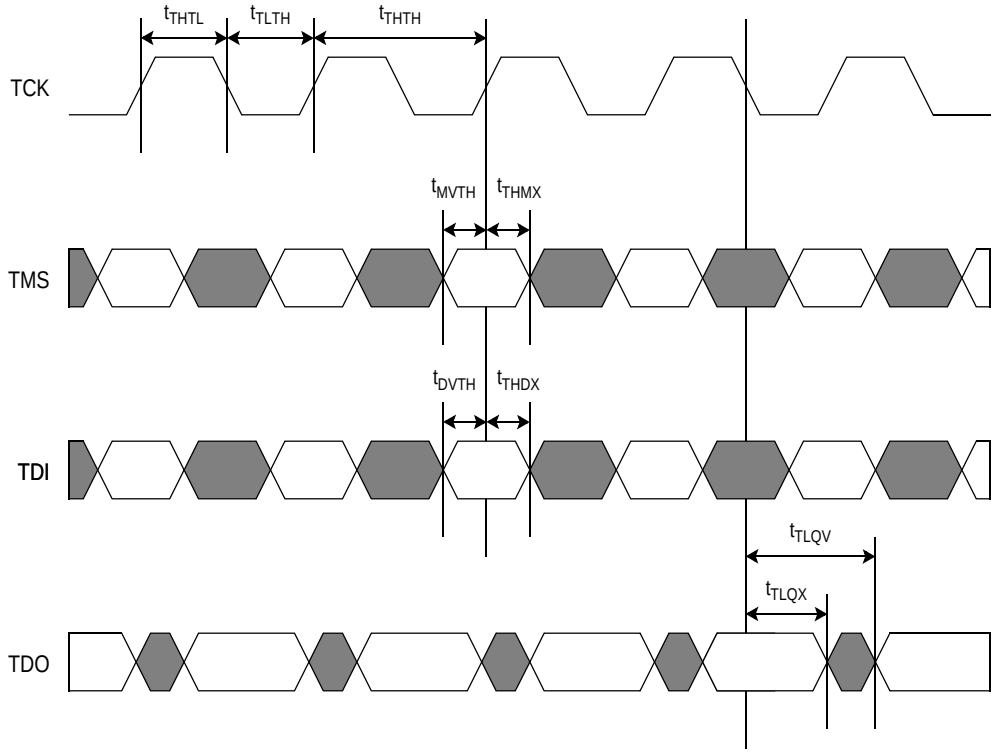

 © 2014, GSI Technology

Specifications cited are subject to change without notice. For latest documentation see http://www.gsitechnology.com.

TAP Controller

The TAP Controller is a 16-state state machine that controls access to the various TAP Registers and executes the operations associated with each TAP Instruction. State transitions are controlled by TMS and occur on the rising edge of TCK.
The TAP Controller enters the Test-Logic Reset state in one of two ways:

1. At power up.
2. When a logic 1 is applied to TMS for at least 5 consecutive rising edges of TCK.

The TDI input receiver is sampled only when the TAP Controller is in either the Shift-IR state or the Shift-DR state.
The TDO output driver is enabled only when the TAP Controller is in either the Shift-IR state or the Shift-DR state.

TAP Controller State Diagram

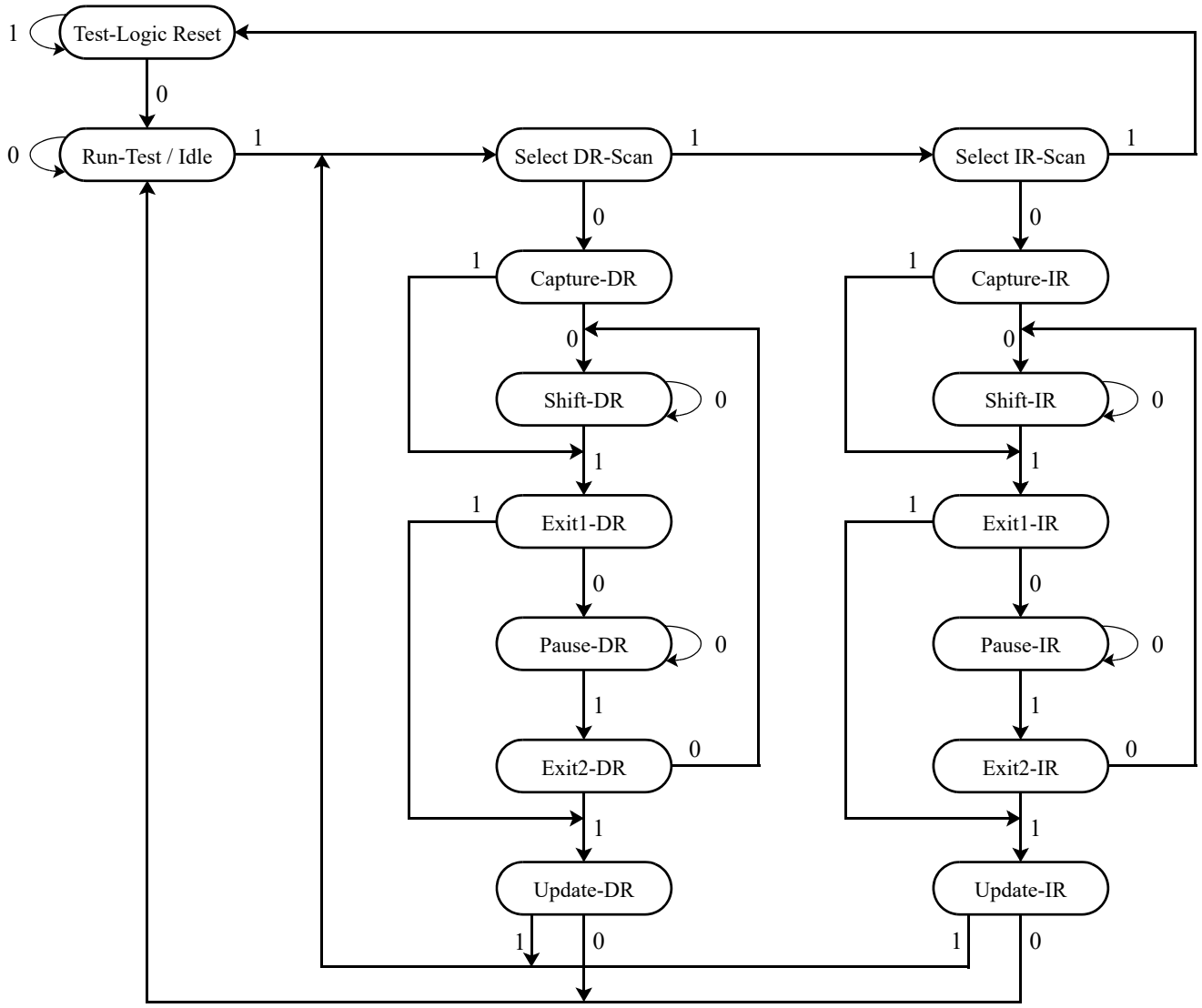

 © 2014, GSI Technology
Specifications cited are subject to change without notice. For latest documentation see http://www.gsitechnology.com.

TAP Registers

TAP Registers are serial shift registers that capture serial input data (from TDI) on the rising edge of TCK, and drive serial output data (to TDO) on the subsequent falling edge of TCK. They are divided into two groups: Instruction Registers (IR), which are manipulated via the IR states in the TAP Controller, and Data Registers (DR), which are manipulated via the DR states in the TAP Controller.

Instruction Register (IR - 3 bits)

The Instruction Register stores the various TAP Instructions supported by SRAM. It is loaded with the IDCODE instruction (logic 001) at power-up, and when the TAP Controller is in the Test-Logic Reset and Capture-IR states. It is inserted between TDI and TDO when the TAP Controller is in the Shift-IR state, at which time it can be loaded with a new instruction. However, newly loaded instructions are not executed until the TAP Controller has reached the Update-IR state.

The Instruction Register is 3 bits wide, and is encoded as follows:

Code (2:0)	Instruction	Description
000	EXTEST	Loads the logic states of all signals composing the SRAM I/O ring into the Boundary Scan Register when the TAP Controller is in the Capture-DR state, and inserts the Boundary Scan Register between TDI and TDO when the TAP Controller is in the Shift-DR state. Also transfers the contents of the Boundary Scan Register associated with output signals (DQ, QVLD, CQ, $\overline{CQ}$) directly to their corresponding output pins. However, newly loaded Boundary Scan Register contents do not appear at the output pins until the TAP Controller has reached the Update-DR state. Also disables all ODT. See the Boundary Scan Register description for more information.
001	IDCODE	Loads a predefined device- and manufacturer-specific identification code into the ID Register when the TAP Controller is in the Capture-DR state, and inserts the ID Register between TDI and TDO when the TAP Controller is in the Shift-DR state. See the ID Register description for more information.
010	SAMPLE-Z	Loads the logic states of all signals composing the SRAM I/O ring into the Boundary Scan Register when the TAP Controller is in the Capture-DR state, and inserts the Boundary Scan Register between TDI and TDO when the TAP Controller is in the Shift-DR state. Also disables all ODT. Also forces DQ output drivers to a High-Z state. See the Boundary Scan Register description for more information.
011	PRIVATE	Reserved for manufacturer use only.
100	SAMPLE	Loads the logic states of all signals composing the SRAM I/O ring into the Boundary Scan Register when the TAP Controller is in the Capture-DR state, and inserts the Boundary Scan Register between TDI and TDO when the TAP Controller is in the Shift-DR state. See the Boundary Scan Register description for more information.
101	PRIVATE	Reserved for manufacturer use only.
110	PRIVATE	Reserved for manufacturer use only.
111	BYPASS	Loads a logic 0 into the Bypass Register when the TAP Controller is in the Capture-DR state, and inserts the Bypass Register between TDI and TDO when the TAP Controller is in the Shift-DR state. See the Bypass Register description for more information.

 © 2014, GSI Technology

Specifications cited are subject to change without notice. For latest documentation see http://www.gsitechnology.com.

Bypass Register (DR - 1 bit)

The Bypass Register is one bit wide, and provides the minimum length serial path between TDI and TDO. It is loaded with a logic 0 when the BYPASS instruction has been loaded in the Instruction Register and the TAP Controller is in the Capture-DR state. It is inserted between TDI and TDO when the BYPASS instruction has been loaded into the Instruction Register and the TAP Controller is in the Shift-DR state.

ID Register (DR - 32 bits)

The ID Register is loaded with a predetermined device- and manufacturer-specific identification code when the IDCODE instruction has been loaded into the Instruction Register and the TAP Controller is in the Capture-DR state. It is inserted between TDI and TDO when the IDCODE instruction has been loaded into the Instruction Register and the TAP Controller is in the Shift-DR state.

The ID Register is 32 bits wide, and is encoded as follows:

See BSDL Model (31:12)	GSI ID (11:1)	Start Bit (0)
XXXX XXXX XXXX XXXX XXXX	0001 1011 001	1

Bit 0 is the LSB of the ID Register, and Bit 31 is the MSB. When the ID Register is selected, TDI serially shifts data into the MSB, and the LSB serially shifts data out through TDO.

Boundary Scan Register (DR - 129 bits)

The Boundary Scan Register is equal in length to the number of active signal connections to the SRAM (excluding the TAP pins) plus a number of place holder locations reserved for functional and/or density upgrades. It is loaded with the logic states of all signals composing the SRAM's I/O ring when the EXTEST, SAMPLE, or SAMPLE-Z instruction has been loaded into the Instruction Register and the TAP Controller is in the Capture-DR state. It is inserted between TDI and TDO when the EXTEST, SAMPLE, or SAMPLE-Z instruction has been loaded into the Instruction Register and the TAP Controller is in the Shift-DR state.

Additionally, the contents of the Boundary Scan Register associated with the SRAM outputs (DQ, QVLD, CQ, $\overline{CQ}$) are driven directly to the corresponding SRAM output pins when the EXTEST instruction is selected. However, after the EXTEST instruction has been selected, any new data loaded into Boundary Scan Register when the TAP Controller is in the Shift-DR state does not appear at the output pins until the TAP Controller has reached the Update-DR state.

The value captured in the boundary scan register for NU pins is determined by the external pin state. The value captured in the boundary scan register for NC pins is 0 regardless of the external pin state. The value captured in the Internal Cell (Bit 129) is 1.

Output Driver State During EXTEST

EXTEST allows the Internal Cell (Bit 129) in the Boundary Scan Register to control the state of DQ drivers. That is, when Bit 129 = 1, DQ drivers are enabled (i.e., driving High or Low), and when Bit 129 = 0, DQ drivers are disabled (i.e., forced to High-Z state). See the Boundary Scan Register section for more information.

ODT State During EXTEST and SAMPLE-Z

ODT on all inputs is disabled during EXTEST and SAMPLE-Z.

 © 2014, GSI Technology

Specifications cited are subject to change without notice. For latest documentation see http://www.gsitechnology.com.

Boundary Scan Register Bit Order Assignment

The table below depicts the order in which the bits are arranged in the Boundary Scan Register. Bit 1 is the LSB and Bit 129 is the MSB. When the Boundary Scan Register is selected, TDI serially shifts data into the MSB, and the LSB serially shifts data out through TDO.

Bit	Pad	Bit	Pad	Bit	Pad	Bit	Pad	Bit	Pad
1	7L	29	12F	57	12W	85	1T	113	1C
2	7K	30	11G	58	10W	86	4R	114	3C
3	9L	31	13G	59	8V	87	2R	115	2B
4	9K	32	10G	60	9U	88	3P	116	4B
5	8J	33	12G	61	8T	89	1P	117	5A
6	7H	34	11H	62	9R	90	4P	118	6A
7	9H	35	13H	63	8P	91	2P	119	6B
8	7G	36	10J	64	9N	92	3N	120	6C
9	8G	37	12J	65	8M	93	1N	121	5D
10	9F	38	13K	66	6M	94	4M	122	6E
11	8E	39	13L	67	7N	95	2M	123	5F
12	7D	40	11L	68	5N	96	3L	124	6G
13	9D	41	12M	69	7P	97	1L	125	5H
14	8C	42	10M	70	6P	98	1K	126	6J
15	7B	43	13N	71	5R	99	2J	127	5K
16	8B	44	11N	72	6T	100	4J	128	5L
17	9B	45	12P	73	7U	101	1H	129	Internal
18	7A	46	10P	74	5U	102	3H		
19	9A	47	13P	75	6V	103	2G		
20	10B	48	11P	76	6W	104	4G		
21	12B	49	12R	77	7Y	105	1G		
22	11C	50	10R	78	4W	106	3G		
23	13C	51	13T	79	2W	107	2F		
24	10D	52	11T	80	3V	108	4F		
25	12D	53	12U	81	1V	109	1E		
26	11E	54	10U	82	4U	110	3E		
27	13E	55	13V	83	2U	111	2D		
28	10F	56	11V	84	3T	112	4D		

 © 2014, GSI Technology

Specifications cited are subject to change without notice. For latest documentation see http://www.gsitechnology.com.

260-Pin BGA Package Drawing (Package GK)

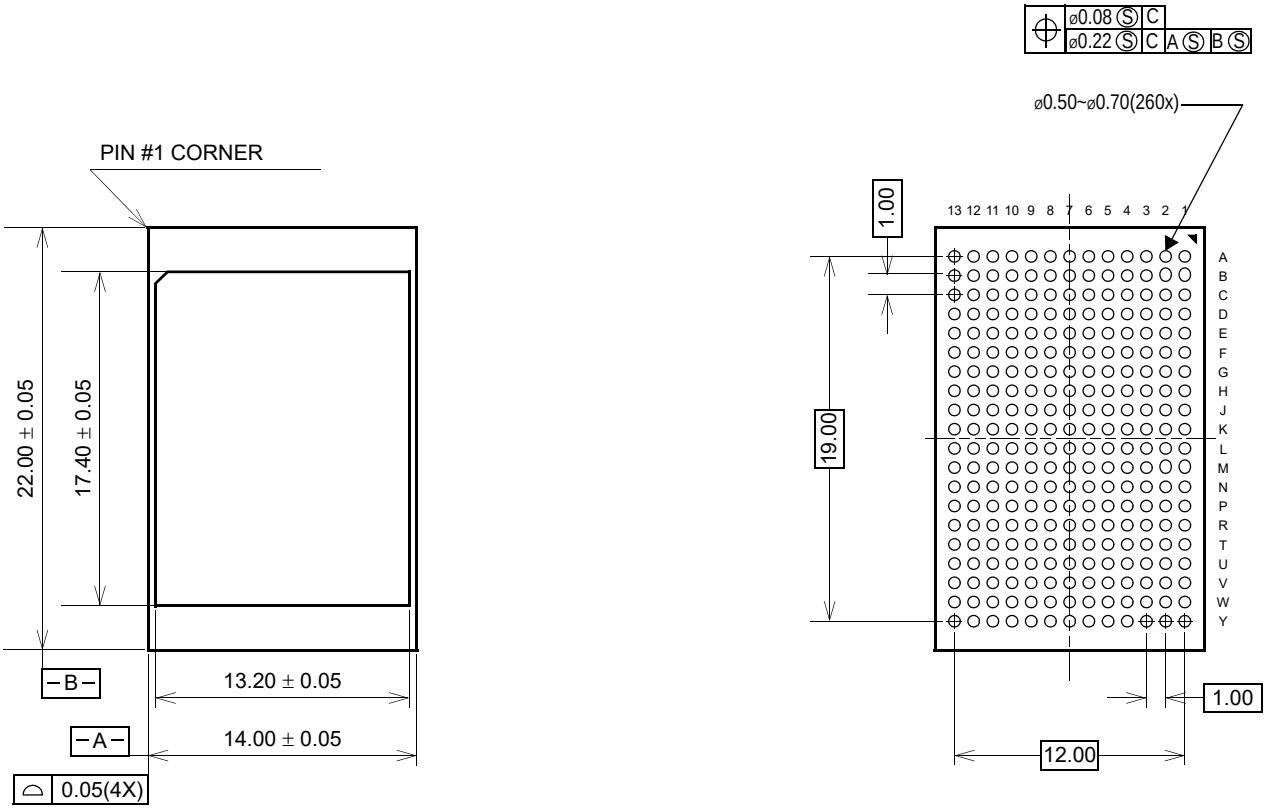

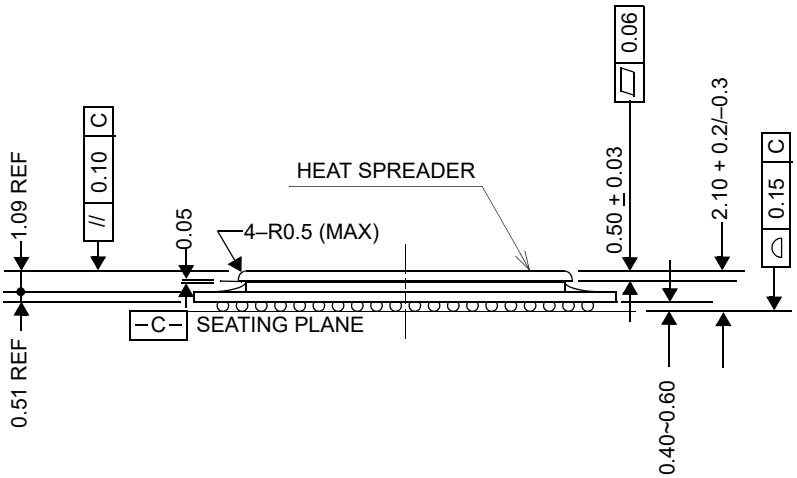

Ball Pitch:	1.00	Substrate Thickness:	0.51
Ball Diameter:	0.60	Mold Thickness:	—

 © 2014, GSI Technology

Specifications cited are subject to change without notice. For latest documentation see http://www.gsitechnology.com.

Ordering Information — GSI SigmaDDR-IIIe SRAM

Org	Part Number	Type	Package	Speed (MHz)	T_A
16M x 18	GS82583ET18GK-675	SigmaDDR-IIIe B2	ROHS-Compliant 260-Pin BGA	675	C
16M x 18	GS82583ET18GK-625	SigmaDDR-IIIe B2	ROHS-Compliant 260-Pin BGA	625	C
16M x 18	GS82583ET18GK-550	SigmaDDR-IIIe B2	ROHS-Compliant 260-Pin BGA	550	C
16M x 18	GS82583ET18GK-500	SigmaDDR-IIIe B2	ROHS-Compliant 260-Pin BGA	500	C
16M x 18	GS82583ET18GK-675I	SigmaDDR-IIIe B2	ROHS-Compliant 260-Pin BGA	675	I
16M x 18	GS82583ET18GK-625I	SigmaDDR-IIIe B2	ROHS-Compliant 260-Pin BGA	625	I
16M x 18	GS82583ET18GK-550I	SigmaDDR-IIIe B2	ROHS-Compliant 260-Pin BGA	550	I
16M x 18	GS82583ET18GK-500I	SigmaDDR-IIIe B2	ROHS-Compliant 260-Pin BGA	500	I
8M x 36	GS82583ET36GK-675	SigmaDDR-IIIe B2	ROHS-Compliant 260-Pin BGA	675	C
8M x 36	GS82583ET36GK-625	SigmaDDR-IIIe B2	ROHS-Compliant 260-Pin BGA	625	C
8M x 36	GS82583ET36GK-550	SigmaDDR-IIIe B2	ROHS-Compliant 260-Pin BGA	550	C
8M x 36	GS82583ET36GK-500	SigmaDDR-IIIe B2	ROHS-Compliant 260-Pin BGA	500	C
8M x 36	GS82583ET36GK-675I	SigmaDDR-IIIe B2	ROHS-Compliant 260-Pin BGA	675	I
8M x 36	GS82583ET36GK-625I	SigmaDDR-IIIe B2	ROHS-Compliant 260-Pin BGA	625	I
8M x 36	GS82583ET36GK-550I	SigmaDDR-IIIe B2	ROHS-Compliant 260-Pin BGA	550	I
8M x 36	GS82583ET36GK-500I	SigmaDDR-IIIe B2	ROHS-Compliant 260-Pin BGA	500	I

Note: C = Commercial Temperature Range. I = Industrial Temperature Range.

 © 2014, GSI Technology

Specifications cited are subject to change without notice. For latest documentation see http://www.gsitechnology.com.

Revision History

Rev. Code	Types of Changes Format or Content	Revisions
GS82583ET1836GK_r1_01	—	• Initial public release.
GS82583ET1836GK_r1_02	Content	• Removed leaded BGA package support.
GS82583ET1836GK_r1_03	Content	• Miscellaneous cleanup.
GS82583ET1836GK_r1_04	Content	• Changed V_{DD} spec to 1.3V ± 50mV. • Added package thermal impedances. • Revised $t_{CQH\overline{CQ}H}$ specs.
GS82583ET1836GK_r1_05	Content	• Removed Preliminary banner. • Added I_{DD} specs.
GS82583ET1836GK_r1_06	Content	• Removed ECCRAM references.
GS82583ET1836GK_r1_07	Content	• Changed Junction Temp to Max Junction Temp in AbsMax table

 © 2014, GSI Technology

Specifications cited are subject to change without notice. For latest documentation see http://www.gsitechnology.com.