19-3774; Rev 4; 5/09

Low-Power, 1%-Accurate Battery Monitors in µDFN and SC70 Packages

General Description

The MAX6775–MAX6781 low-power, 1%-accurate battery monitors are available in the ultra-small µDFN package (1.0mm x 1.5mm) and SC70 packages. These low-power devices are ideal for monitoring single lithium-ion (Li+) cells, or multicell alkaline/NiCd/NiMH power sources. These devices offer single (MAX6775/MAX6776/MAX6777/MAX6778) or dual (MAX6779/MAX6780/MAX6781) low-battery outputs and feature fixed or resistor-adjustable hysteresis. Hysteresis eliminates the output chatter sometimes associated with battery voltage monitors, usually due to input-voltage noise or battery terminal voltage recovery after load removal.

These devices are available in several versions: with single- or dual-voltage monitors, and with fixed or adjustable hysteresis. The MAX6775/MAX6776 offer a single battery monitor and factory-set hysteresis of 0.5%, 5%, or 10%. The MAX6779/MAX6780/MAX6781 have two battery monitors in a single package and factory-set hysteresis of 0.5%, 5%, or 10%. The MAX6777/MAX6778 offer a single battery monitor with external inputs for the rising and falling thresholds, allowing external hysteresis control.

For convenient interface with system power circuitry or microprocessors, both open-drain and push-pull outputs are available. The single-channel devices are available with open-drain or push-pull outputs. The dual-channel devices are available with both outputs open-drain, both outputs push-pull, or one of each (see the *Selector Guide*). This family of devices is offered in small 5-pin SC70 and ultra-small 6-pin µDFN packages, and is fully specified over the -40°C to +85°C extended temperature range.

Features

- **1.0%-Accurate Threshold Specified Over Temperature**
- **Single/Dual, Low-Battery Output Options**
- **Low 3µA Battery Current**
- **Open-Drain or Push-Pull Low-Battery Outputs**
- **Fixed or Adjustable Hysteresis**
- **Low-Input Leakage Current Allows Use of Large Resistors**
- **Guaranteed Valid Low-Battery-Output Logic State Down to V_{BATT} = 1V**
- **Immune to Short Battery Transients**
- **Fully Specified from -40°C to +85°C**
- **Small 5-Pin SC70 or Ultra-Small 6-Pin µDFN (1mm x 1.5mm) Package**

Ordering Information

PART	TEMP RANGE	PIN-PACKAGE
MAX6775XK_+T	-40°C to +85°C	5 SC70
MAX6775LT_+T	-40°C to +85°C	6 µDFN
MAX6776XK_+T	-40°C to +85°C	5 SC70
MAX6776LT_+T	-40°C to +85°C	6 µDFN
MAX6777XK+T	-40°C to +85°C	5 SC70
MAX6777LT+T	-40°C to +85°C	6 µDFN

Ordering Information continued at end of data sheet.

+Denotes a lead(Pb)-free/RoHS-compliant package.
T = Tape and reel.
MAX6775/MAX6776/MAX6779/MAX6780/MAX6781 are available with factory-trimmed hysteresis. Specify trim by replacing "_" with "A" for 0.5%, "B" for 5%, or "C" for 10% hysteresis.

Applications

Battery-Powered Systems (Single-Cell Li+ or Multicell NiMH, NiCd, Alkaline)

Cell Phones/Cordless Phones

Pagers

Portable Medical Devices

PDAs

Electronic Toys

MP3 Players

Typical Operating Circuit

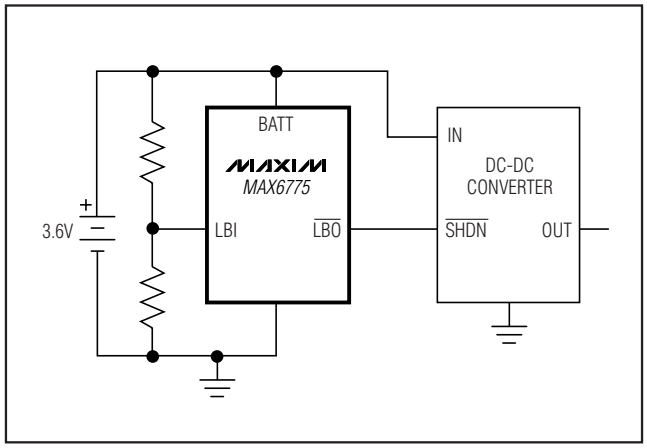

Pin Configurations appear at end of data sheet.

For pricing, delivery, and ordering information, please contact Maxim Direct at 1-888-629-4642, or visit Maxim's website at www.maxim-ic.com.

Low-Power, 1%-Accurate Battery Monitors in µDFN and SC70 Packages

ABSOLUTE MAXIMUM RATINGS

BATT to GND .....-0.3V to +6V
LBI, LBL, LBH, LBI1, LBI2 to GND .....-0.3V to minimum of ((V_{BATT} + 0.3V) and +6V)
$\overline{LBO}$, $\overline{LBO1}$, $\overline{LBO2}$ to GND (open-drain) .....-0.3V to +6V
$\overline{LBO}$, $\overline{LBO1}$, $\overline{LBO2}$ to GND (push-pull).....-0.3V to minimum of ((V_{BATT} + 0.3V) and +6V)
Input Current (all pins) 20mA
Output Current (all pins) 20mA

Continuous Power Dissipation (T_A = +70°C)
5-Pin SC70 (derate 3.1mW/°C above +70°C).....247mW
6-Pin µDFN (derate 2.1mW°C above +70°C) 168mW
Junction Temperature .....+150°C
Storage Temperature Range .....-65°C to +150°C
Lead Temperature (soldering, 10s) .....+300°C

Stresses beyond those listed under "Absolute Maximum Ratings" may cause permanent damage to the device. These are stress ratings only, and functional operation of the device at these or any other conditions beyond those indicated in the operational sections of the specifications is not implied. Exposure to absolute maximum rating conditions for extended periods may affect device reliability.

ELECTRICAL CHARACTERISTICS

(V_{BATT} = 1.6V to 5.5V, T_A = -40°C to +85°C, unless otherwise specified. Typical values are at T_A = +25°C.) (Note 1)

PARAMETER	SYMBOL	CONDITIONS	MIN	TYP	MAX	UNITS
Operating Voltage Range (Note 2)	V_{BATT}	T_A = 0°C to +70°C	1.0		5.5	V
		T_A = -40°C to +85°C	1.2		5.5	
Supply Current	I_Q	V_{BATT} = 3.7V, no load		4	7	µA
		V_{BATT} = 1.8V, no load		3.2	6	
FIXED HYSTERESIS (MAX6775/MAX6776/MAX6779/MAX6780/MAX6781)						
LBI, LBI_ Falling Threshold (Note 3)	V_{LBIF}	0.5% hysteresis version	1.2037	1.2159	1.2280	V
		5% hysteresis version	1.1493	1.1609	1.1725	
		10% hysteresis version	1.0888	1.0998	1.1108	
LBI Rising Threshold	V_{LBIR}		1.2098	1.222	1.2342	V
LBI Input Leakage Current		0.2V ≤ V_{LBI} ≤ V_{BATT} - 0.2V	-5		+5	nA
ADJUSTABLE HYSTERESIS (MAX6777/MAX6778)						
LBL, LBH Threshold		V_{BATT} = 1.8V to 5.5V	1.2098	1.222	1.2342	V
LBL, LBH Input Leakage Current		V_{BATT} - 0.2V ≥ $V_{LBL/LBH}$ ≥ 0.2V	-5		+5	nA

ELECTRICAL CHARACTERISTICS (continued)

(V_{BATT} = 1.6V to 5.5V, T_A = -40°C to +85°C, unless otherwise specified. Typical values are at T_A = +25°C.) (Note 1)

PARAMETER	SYMBOL	CONDITIONS	MIN	TYP	MAX	UNITS
LOW-BATTERY OUTPUTS ($\overline{LBO}$, $\overline{LBO1}$, $\overline{LBO2}$)						
Propagation Delay	t_{PD}	$V_{LBI_}$ + 100mV to $V_{LBI_}$ - 100mV		9		µs
Startup Time		V_{BATT} rising above 1.6V			3	ms
Output Low (Push-Pull or Open-Drain)	V_{OL}	$V_{BATT} \geq$ 1.2V, I_{SINK} = 100µA			0.3	V
		$V_{BATT} \geq$ 2.7V, I_{SINK} = 1.2mA			0.3	
		$V_{BATT} \geq$ 4.5V, I_{SINK} = 3.2mA			0.3	
Output High (Push-Pull)	V_{OH}	$V_{BATT} \geq$ 1.6V, I_{SOURCE} = 100µA	0.8 x V_{BATT}			V
		$V_{BATT} \geq$ 2.7V, I_{SOURCE} = 500µA	0.8 x V_{BATT}			
		$V_{BATT} \geq$ 4.5V, I_{SOURCE} = 800µA	0.8 x V_{BATT}			
Output Leakage Current (Open-Drain)		Output not asserted, $V_{LBO_}$ = 5.5V	-100		+100	nA

Note 1: Devices are tested at T_A = +25°C and guaranteed by design for T_A = T_{MIN} to T_{MAX}, as specified.
Note 2: Operating range ensures low-battery output is in the correct state. Minimum battery voltage for electrical specification is 1.6V.
Note 3: The rising threshold is guaranteed to be higher than the falling threshold.

Typical Operating Characteristics

(T_A = +25°C, unless otherwise noted.)

SUPPLY CURRENT vs. TEMPERATURE

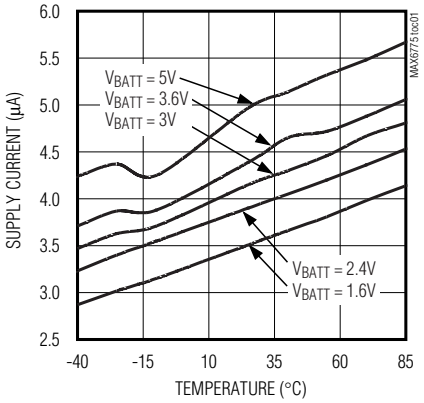

PROPAGATION DELAY vs. TEMPERATURE

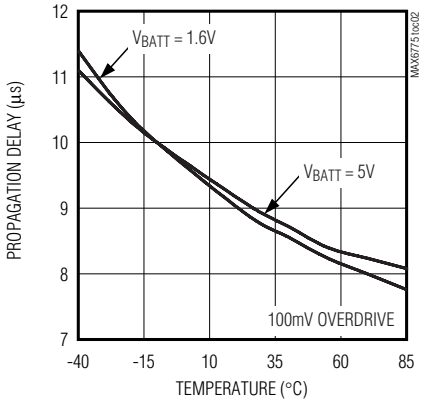

MAXIMUM TRANSIENT DURATION vs. THRESHOLD OVERDRIVE

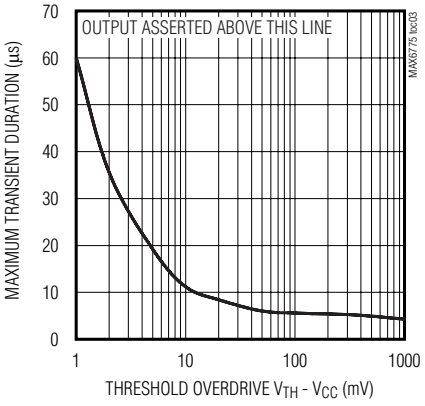

Low-Power, 1%-Accurate Battery Monitors in µDFN and SC70 Packages

Typical Operating Characteristics (continued)

(T_A = +25°C, unless otherwise noted.)

NORMALIZED THRESHOLD VOLTAGES vs. TEMPERATURE, MAX67__A

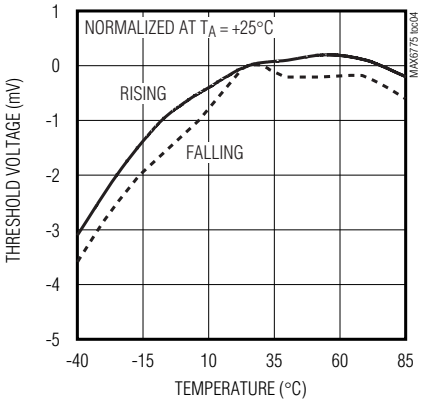

NORMALIZED THRESHOLD VOLTAGES vs. TEMPERATURE, MAX67__B

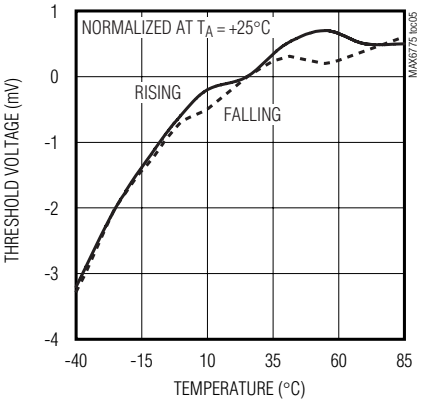

NORMALIZED THRESHOLD VOLTAGES vs. TEMPERATURE, MAX67__C

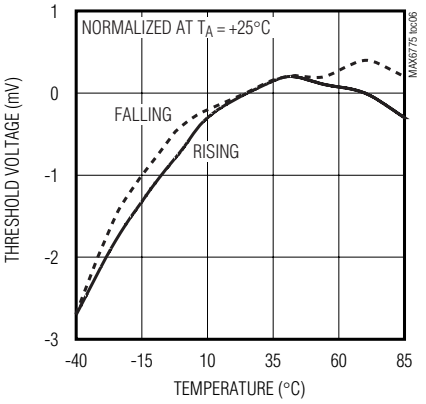

$\overline{LBO}$ OUTPUT VOLTAGE vs. SINK CURRENT

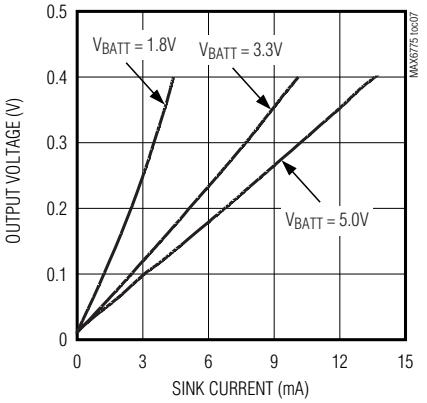

$\overline{LBO}$ OUTPUT VOLTAGE vs. SOURCE CURRENT

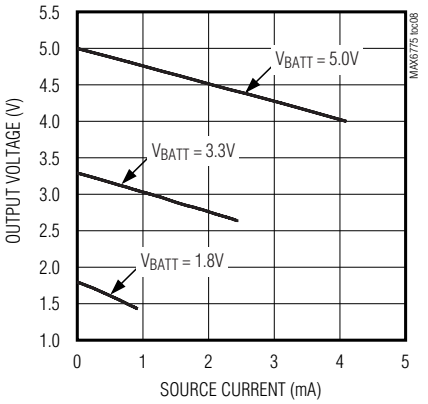

Pin Description

MAX6775/ MAX6776		MAX6777/ MAX6778		MAX6779/ MAX6780/ MAX6781	NAME	FUNCTION
µDFN	SC70	µDFN	SC70	µDFN		
1	1	—	—	—	GND2	Reserved. Must be connected to GND. Do not use as the only GND connection.
2	2	2	2	2	GND	Ground
3	3	—	—	—	LBI	Low-Battery Input. Connect to the resistive divider to set the trip level.
4	4	4	4	—	$\overline{LBO}$	Low-Battery Output, Active-Low. When V_{LBI}/V_{LBL} falls below the falling threshold, $\overline{LBO}$ asserts. $\overline{LBO}$ deasserts when V_{LBI}/V_{LBH} exceeds the rising threshold voltage.
5	—	5	—	—	N.C.	No Connection. Not internally connected.
6	5	6	5	6	BATT	Battery Input. Power supply to the device.
—	—	1	1	—	LBH	Rising-Trip-Level Input. Connect to a resistive divider to set the rising trip level.
—	—	3	3	—	LBL	Falling-Trip-Level Input. Connect to a resistive divider to set the falling trip level.
—	—	—	—	1	LBI2	Low-Battery Input 2. Connect to a resistive divider to set the trip level.
—	—	—	—	3	LBI1	Low-Battery Input 1. Connect to a resistive divider to set the trip level.
—	—	—	—	4	$\overline{LBO1}$	Low-Battery Output 1, Active-Low. When V_{LBI1} falls below the falling threshold voltage, $\overline{LBO1}$ asserts. $\overline{LBO1}$ deasserts when V_{LBI1} exceeds the rising threshold voltage. $\overline{LBO1}$ is push-pull on the MAX6779/MAX6781 and open-drain for the MAX6780.
—	—	—	—	5	$\overline{LBO2}$	Low-Battery Output 2, Active-Low. When V_{LBI2} falls below the falling threshold voltage, $\overline{LBO2}$ asserts. $\overline{LBO2}$ deasserts when V_{LBI2} exceeds the rising threshold voltage. $\overline{LBO2}$ is open-drain for the MAX6780/MAX6781 and push-pull for the MAX6779.

Low-Power, 1%-Accurate Battery Monitors in µDFN and SC70 Packages

Detailed Description

These battery monitors have an active-low output that asserts when the input falls below a set voltage. They also offer hysteresis for noise immunity, and to remove the possibility of output chatter due to battery terminal voltage recovery after load removal. They are available with one or two monitors per package, with push-pull or open-drain outputs, and with internally set or externally adjustable hysteresis (dual-channel devices offer only internally fixed hysteresis). Figures 1, 2, and 3 show block diagrams and typical connections. See the *Selector Guide* for details.

Low-Battery Output

All devices are offered with either push-pull or open-drain outputs (see the *Selector Guide*). The MAX6781 has one push-pull output and one open-drain output, configured as in Table 1.

On all devices with open-drain outputs an external pullup resistor is required. The open-drain pullup resistor can connect to an external voltage up to +6V, regardless of the voltage at BATT.

Table 1. MAX6781 Outputs

DEVICE	$\overline{\text{LBO1}}$	$\overline{\text{LBO2}}$
MAX6781	Push-Pull	Open-Drain

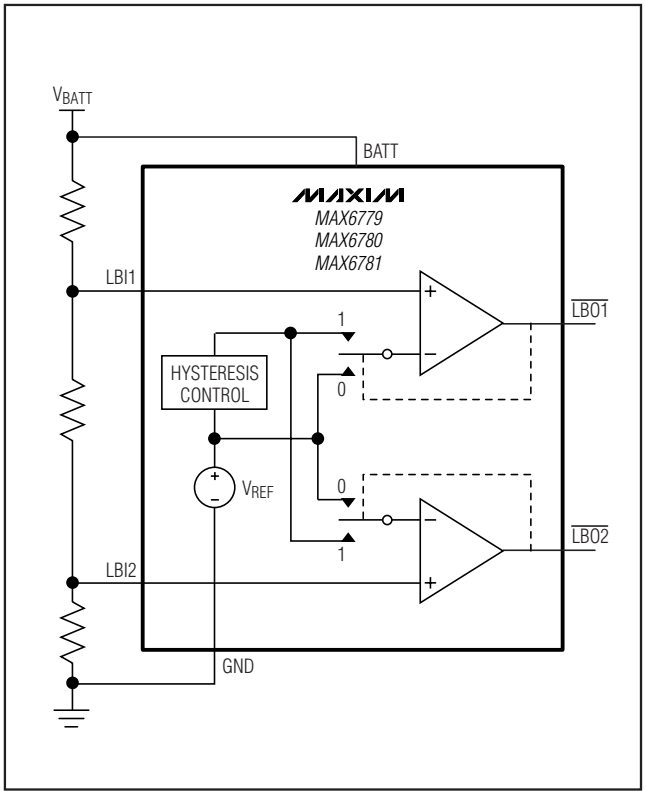

Figure 2. Dual-Channel Fixed-Hysteresis Block Diagram

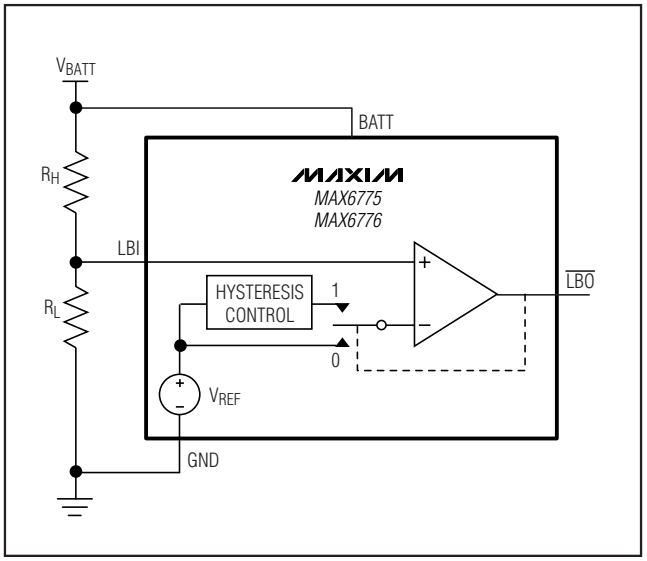

Figure 1. Single-Channel Fixed-Hysteresis Block Diagram

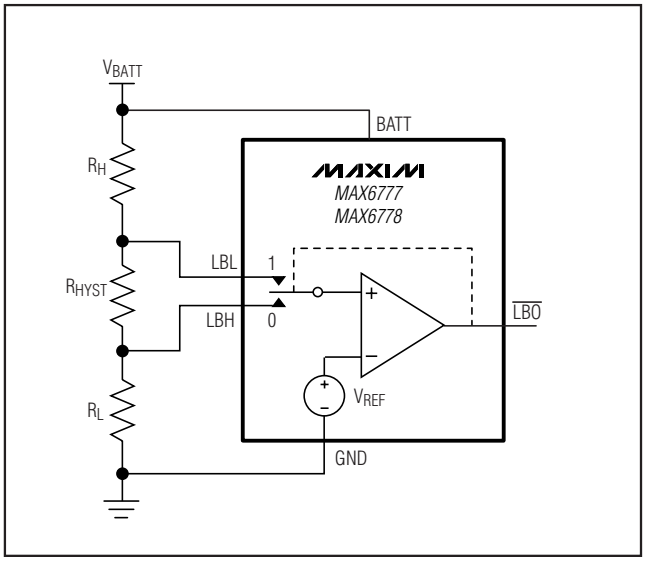

Figure 3. Single-Channel Adjustable-Hysteresis Block Diagram

The MAX6779, MAX6780, and MAX6781 monitor two battery levels or two independent voltages. A common application for this type of dual-battery monitor is to use one output as an early warning signal and the other as a dead-battery indicator.

Hysteresis

Input hysteresis defines two thresholds, separated by a small voltage (the hysteresis voltage), configured so the output asserts when the input falls below the falling threshold, and deasserts only when the input rises above the rising threshold. Figure 4 shows this graphically. Hysteresis removes, or greatly reduces, the possibility of the output changing state in response to noise or battery terminal voltage recovery after load removal.

Fixed Hysteresis

The MAX6775/MAX6776/MAX6779/MAX6780/MAX6781 have factory-set hysteresis for ease of use, and reduce component count. For these devices, the absolute hysteresis voltage is a percentage of the internally generated reference. The amount depends on the device option. “A” devices have 0.5% hysteresis, “B” devices have 5% hysteresis, and “C” devices have 10% hysteresis. Table 2 presents the threshold voltages for devices with internally fixed hysteresis.

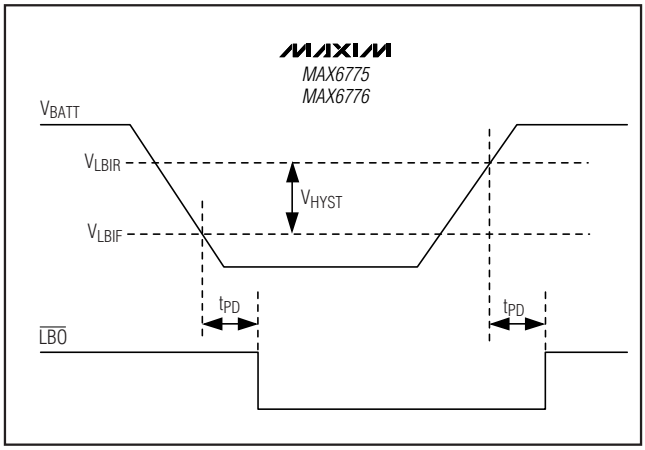

Figure 4. Hysteresis

Adjustable Hysteresis

The MAX6777/MAX6778 offer external hysteresis control through the resistive divider that monitors battery voltage. Figure 3 shows the connections for external hysteresis. See the *Calculating an External Hysteresis Resistive Divider* section for more information.

Applications Information

Resistor-Value Selection

Choosing the proper external resistors is a balance between accuracy and power use. The input to the voltage monitor, while high impedance, draws a small current, and that current travels through the resistive divider, introducing error. If extremely high resistor values are used, this current introduces significant error. With extremely low resistor values, the error becomes negligible, but the resistive divider draws more power from the battery than necessary and shortens battery life. Figure 1 calculates the optimum value for R_H using:

$$R_H = \frac{e_A \times V_{BATT}}{I_L}$$

where e_A is the maximum acceptable absolute resistive divider error (use 0.01 for 1%), V_{BATT} is the battery voltage at which $\overline{LBO}$ should activate, and I_L is the worst-case LBI leakage current. For example, with 0.5% accuracy, a 2.8V battery minimum, and 5nA leakage, R_H = 2.80MΩ.

Calculate R_L using:

$$R_L = -\frac{V_{LBIF} \times R_H}{V_{LBIF} - V_{BATT}}$$

where V_{LBIF} is the falling threshold voltage from Table 2. Continuing the above example, select V_{LBIF} = 1.0998V (10% hysteresis device) and R_L = 1.81MΩ.

Table 2. Typical Falling and Rising Thresholds for MAX6775/MAX6776/MAX6779/MAX6780/MAX6781

DEVICE OPTION	PERCENT HYSTERESIS (%)	FALLING THRESHOLD (V_{LBIF}) (V)	RISING THRESHOLD (V_{LBIR}) (V)	HYSTERESIS VOLTAGE (V_{HYST}) (mV)
A	0.5	1.2159	1.222	6.11
B	5	1.1609	1.222	61.1
C	10	1.0998	1.222	122

Low-Power, 1%-Accurate Battery Monitors in µDFN and SC70 Packages

Calculating an External Hysteresis Resistive Divider

Setting the hysteresis externally requires three external resistors, as shown in Figure 3. Select R_H using the following formula:

$$R_H \le \frac{e_A \times V_{BATT_RISING}}{I_L}$$

where e_A is the allowable error due to input leakage current (typically 0.005 or less), V_{BATT_RISING} is the desired rising threshold, and I_L is the worst-case leakage current (5nA). Then calculate R_{LO} (which is the sum of R_L and R_{HYST}):

$$R_{LO} = \frac{V_{LBI} \times R_H}{V_{BATT_FALLING} - V_{LBI}}$$

where V_{LBI} is 1.222V and $V_{BATT_FALLING}$ is the desired falling threshold. Calculate R_L using:

$$R_L = \frac{V_{LBI} \times (R_H + R_{LO})}{V_{BATT_RISING}}$$

and finally, calculate R_{HYST}:

$$R_{HYST} = R_{LO} - R_L$$

Monitoring a Battery Voltage Higher Than the Allowable V_{BATT}

For monitoring higher voltages, supply power to BATT that is within the specified supply range, and power the input resistive divider from the high voltage to be monitored. Do not exceed the *Absolute Maximum Ratings*.

Adding External Capacitance to Reduce Noise and Transients

If monitoring voltages in a noisy environment, add a bypass capacitor of 0.1µF from BATT to GND as close as possible to the device. For systems with large transients, additional capacitance may be required. A small capacitor (<1nF) from LBI_ to GND may provide additional noise immunity.

Selector Guide

PART	$\overline{\text{LBO}}$ OUTPUT	OUTPUT TYPE	HYSTERESIS	PIN-PACKAGE
MAX6775XK_+T	Single	Push-Pull	Fixed	5 SC70
MAX6775LT_+T	Single	Push-Pull	Fixed	6 µDFN
MAX6776XK_+T	Single	Open-Drain	Fixed	5 SC70
MAX6776LT_+T	Single	Open-Drain	Fixed	6 µDFN
MAX6777XK+T	Single	Push-Pull	Adjustable	5 SC70
MAX6777LT+T	Single	Push-Pull	Adjustable	6 µDFN
MAX6778XK+T	Single	Open-Drain	Adjustable	5 SC70
MAX6778LT+T	Single	Open-Drain	Adjustable	6 µDFN
MAX6779LT_+T	Dual	Push-Pull	Fixed	6 µDFN
MAX6780LT_+T	Dual	Open-Drain	Fixed	6 µDFN
MAX6781LT_+T	Dual	Mixed	Fixed	6 µDFN

Top Marks

PART	TOP MARK
MAX6775XKA+T	ASA
MAX6775XKB+T	ASB
MAX6775XKC+T	ASC
MAX6775LTA+T	BU
MAX6775LTB+T	BW
MAX6775LTC+T	BX
MAX6776XKA+T	ASJ
MAX6776XKB+T	ASK
MAX6776XKC+T	ASL
MAX6776LTA+T	BY
MAX6776LTB+T	BZ
MAX6776LTC+T	CA

PART	TOP MARK
MAX6777XK+T	ASD
MAX6777LT+T	CB
MAX6778XK+T	ASI
MAX6778LT+T	CC
MAX6779LTA+T	BL
MAX6779LTB+T	BM
MAX6779LTC+T	BN
MAX6780LTA+T	BO
MAX6780LTB+T	BP
MAX6780LTC+T	BQ
MAX6781LTA+T	BR
MAX6781LTB+T	BS
MAX6781LTC+T	BT

Ordering Information (continued)

PART	TEMP RANGE	PIN-PACKAGE
MAX6778XK+T	-40°C to +85°C	5 SC70
MAX6778LT+T	-40°C to +85°C	6 µDFN
MAX6779LT_+T	-40°C to +85°C	6 µDFN
MAX6780LT_+T	-40°C to +85°C	6 µDFN
MAX6781LT_+T	-40°C to +85°C	6 µDFN

+Denotes a lead(Pb)-free/RoHS-compliant package.
T = Tape and reel.
MAX6775/MAX6776/MAX6779/MAX6780/MAX6781 are available with factory-trimmed hysteresis. Specify trim by replacing "_" with "A" for 0.5%, "B" for 5%, or "C" for 10% hysteresis.

Chip Information

PROCESS: BICMOS

Low-Power, 1%-Accurate Battery Monitors in µDFN and SC70 Packages

Pin Configurations

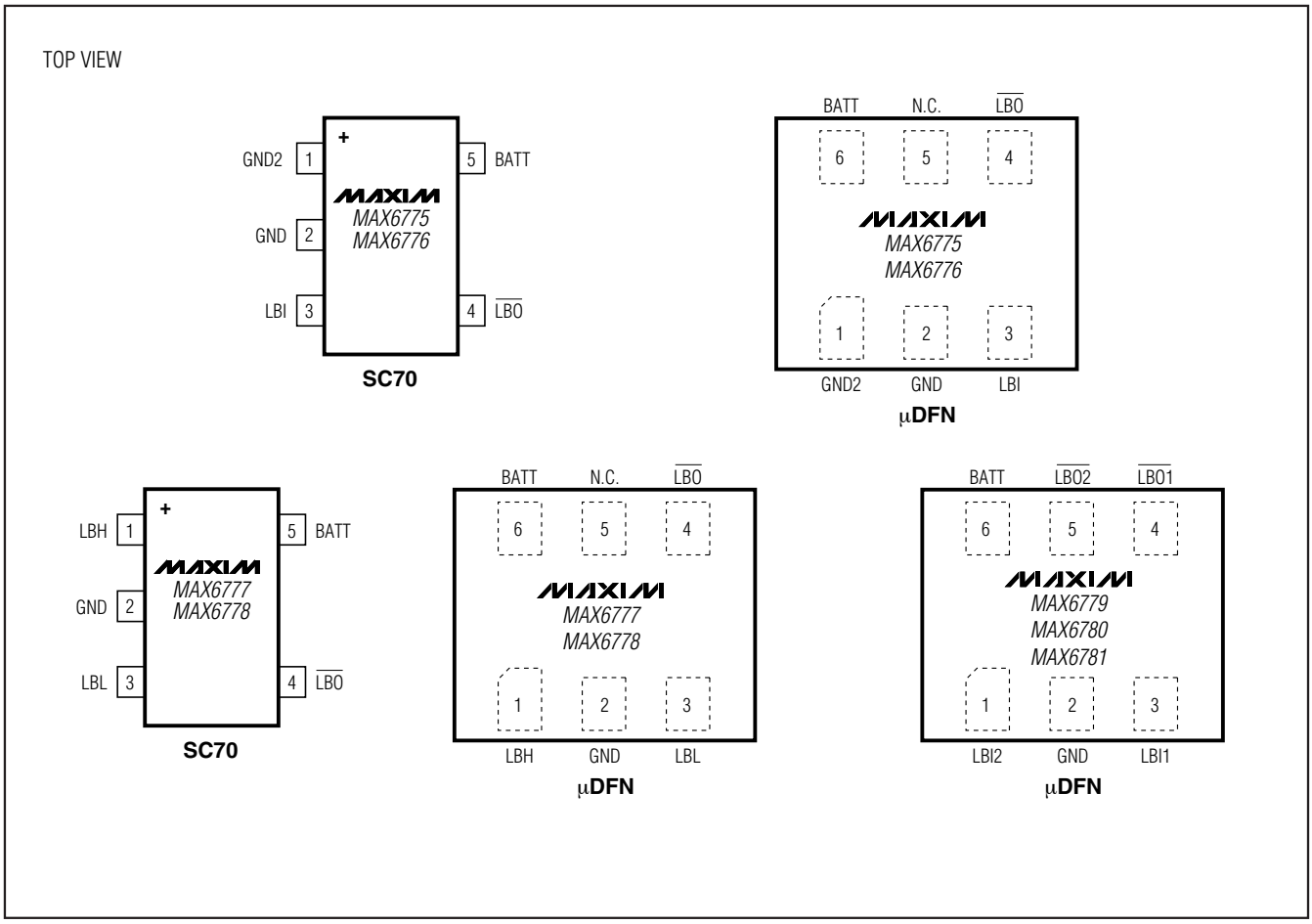

Package Information

For the latest package outline information and land patterns, go to **www.maxim-ic.com/packages**.

PACKAGE TYPE	PACKAGE CODE	DOCUMENT NO.
5 SC70	X5-1	21-0076
6 µDFN	L611-1	21-0147

Revision History

REVISION NUMBER	REVISION DATE	DESCRIPTION	PAGES CHANGED
4	5/09	Updated *Calculating an External Hysteresis Resistive Divider* section	8

Maxim cannot assume responsibility for use of any circuitry other than circuitry entirely embodied in a Maxim product. No circuit patent licenses are implied. Maxim reserves the right to change the circuitry and specifications without notice at any time.

© 2009 Maxim Integrated Products Maxim is a registered trademark of Maxim Integrated Products, Inc.