samtec

MICROMATE™

(1.00 mm) .03937"

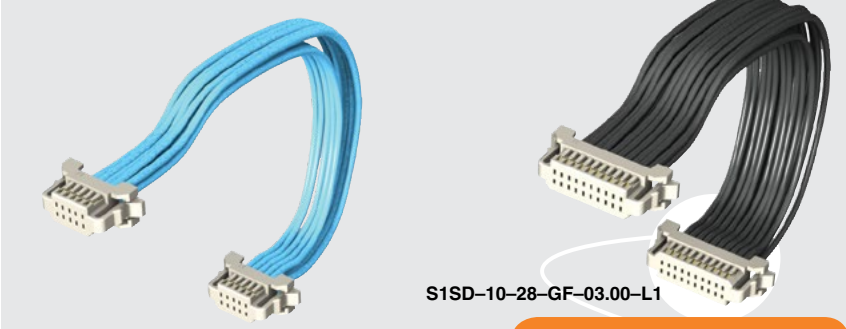

S1SDT–05–28–GF–03.00–L1

S1SD–10–28–GF–03.00–L1

S1SD, S1SDT SERIES

MICRO DOUBLE ROW CABLE SOCKET

SPECIFICATIONS

For complete specifications see www.samtec.com?S1SD or www.samtec.com?S1SDT

Insulator Material:
Natural Nylon
Contact Material:
Phosphor Bronze
Plating:
Au over 50 µ" (1.27 µm) Ni
Operating Temp Range (S1SD(T)/T1M):
-10 °C to +85 °C (PVC)
-40 °C to +125 °C (Teflon® cable with -GF plated contact)
Current Rating (28 AWG):
2.3 A per pin
(2 pins powered)
Voltage Rating:
250 VAC/353 VDC
Wire:
28 or 30 AWG
RoHS Compliant:
Yes

*DuPont™ Teflon® is a registered trademark of the E.I. du Pont de Nemours and Company or its affiliates.

Board Mates:
T1M

Cable Mates:
T1SD, T1PD, T1SDT, T1PDT

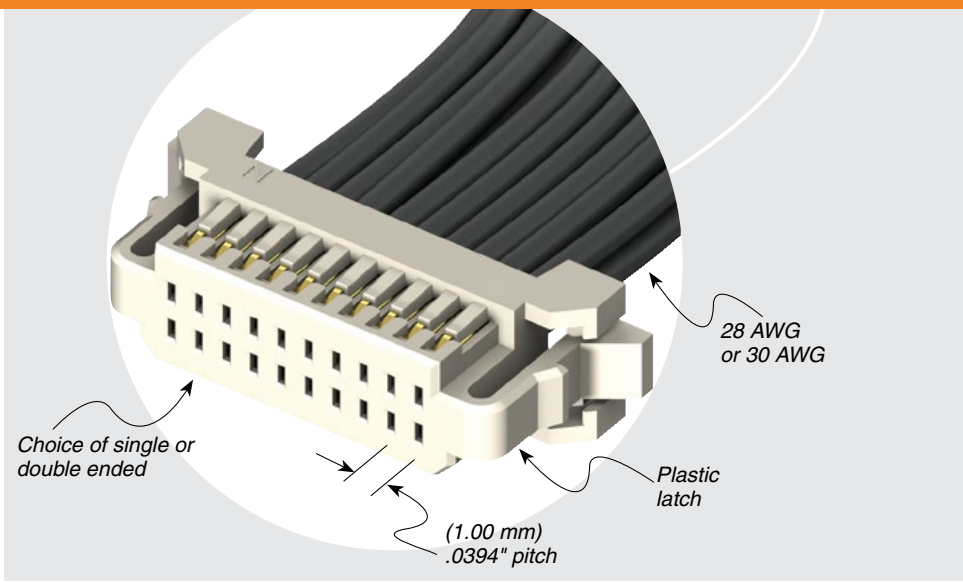

RECOGNITIONS

For complete scope of recognitions see www.samtec.com/quality

FILE NO. E111594

COMPONENTS

- For body, see www.samtec.com?ISD1
- For contacts, see www.samtec.com?CC09R www.samtec.com?CC09M

ALSO AVAILABLE (MOQ Required)

- Other sizes
- Color coded cable (*Teflon® not available)

Notes:
Teflon® cable is intended for crimp only. Contact Samtec for solderable cable applications.

Some lengths, styles and options are non-standard, non-returnable.

TYPE STRIP	POSITIONS PER ROW	WIRE GAUGE	PLATING OPTION	ASSEMBLED LENGTH	WIRING OPTION
S1SD = Double Row PVC Cable **S1SDT** = Double Row *Teflon® Cable	–02, –03 –04, –05, –10, –15, –20 (Standard sizes)	**–28** = 28 AWG **–30** = 30 AWG	**–GF** = 3 µ" (0.07 µm) Gold on contact and tail	**–"XX.XX"** = Assembled Length in Inches (45.72 mm) 01.80" min.	Double Ended Assemblies **–L1** = Pin 1 to Pin 1 **–L2** = Pin 1 to Pin 2 **–L3** = Pin 1 to Pin N **–L4** = Pin 1 to Pin N-1 Single Ended Assembly **–L** = Latching

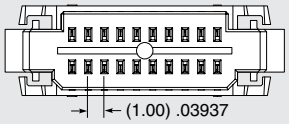

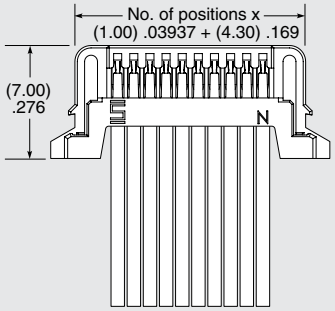

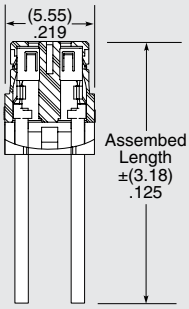

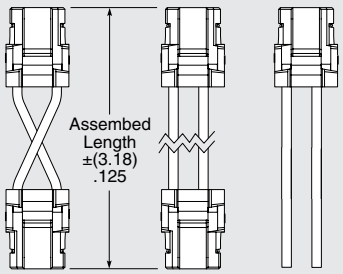

–L3 –L1 –L

Due to technical progress, all designs, specifications and components are subject to change without notice.

All parts within this catalog are built to Samtec's specifications.
Customer specific requirements must be approved by Samtec and identified in a Samtec customer-specific drawing to apply.