19-4725; Rev 4; 9/08

Improved, 8-Channel/Dual 4-Channel, CMOS Analog Multiplexers

General Description

Maxim's redesigned DG408 and DG409 CMOS analog multiplexers now feature guaranteed matching between channels (8Ω max) and flatness over the specified signal range (9Ω max). These low on-resistance muxes (100Ω max) conduct equally well in either direction and feature guaranteed low charge injection (15pC max). In addition, these new muxes offer low input off-leakage current over temperature—less than 5nA at +85°C.

The DG408 is a 1-of-8 multiplexer/demultiplexer and the DG409 is a dual 4-channel multiplexer/demultiplexer. Both muxes operate with a +5V to +30V single supply and with ±5V to ±20V dual supplies. ESD protection is guaranteed to be greater than 2000V per Method 3015.7 of MIL-STD-883. These improved muxes are pin-compatible plug-in upgrades for the industry standard DG408 and DG409.

Features

- **Pin-Compatible Plug-In Upgrades for Industry Standard DG408/DG409**
- **Guaranteed Matching Between Channels, 8Ω Max**
- **Guaranteed On-Resistance Flatness, 9Ω Max**
- **Guaranteed Low Charge Injection, 15pC Max**
- **Low On-Resistance, 100Ω Max**
- **Input Leakage, 5nA Max at +85°C**
- **Low Power Consumption, 1.25mW Max**
- **Rail-to-Rail Signal Handling**
- **Digital Input Controls TTL/CMOS Compatible**
- **ESD Protection >2000V per Method 3015.7**

Applications

Sample-and-Hold Circuits

Test Equipment

Guidance and Control Systems

Communications Systems

Data-Acquisition Systems

Audio Signal Routing

Ordering Information

PART	TEMP RANGE	PIN-PACKAGE
DG408CUE	0°C to +70°C	16 TSSOP
DG408CJ	0°C to +70°C	16 Plastic DIP
DG408CY	0°C to +70°C	16 Narrow SO
DG408C/D	0°C to +70°C	Dice*
DG408EUE	0°C to +70°C	16 TSSOP
DG408DJ	-40°C to +85°C	16 Plastic DIP
DG408DY	-40°C to +85°C	16 Narrow SO

Ordering Information continued at end of data sheet.

**Contact factory for dice specifications.*

***Contact factory for availability and processing to MIL-STD-883.*

Pin Configurations

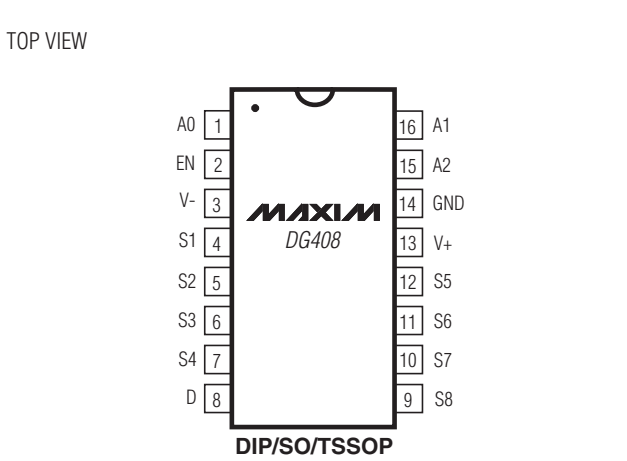

DG409 appears at end of data sheet.

Functional Diagrams

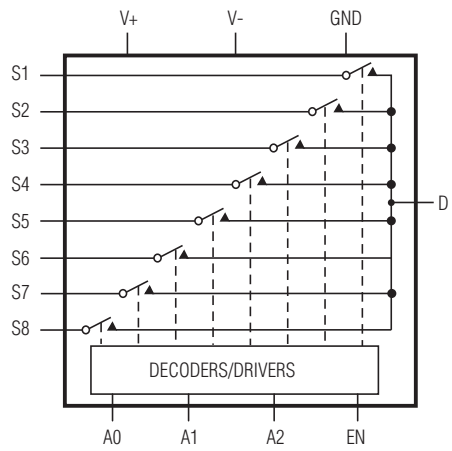

DG408 1-of-8 MUX/DEMUX

DG409 appears at end of data sheet.

For pricing, delivery, and ordering information, please contact Maxim Direct at 1-888-629-4642, or visit Maxim's website at www.maxim-ic.com.

Improved, 8-Channel/Dual 4-Channel, CMOS Analog Multiplexers

ABSOLUTE MAXIMUM RATINGS

Voltage Referenced to V-
- V+ .....-0.3V, 44V
- GND .....-0.3V, 25V

Digital Inputs, S, D (Note 1).....(V- - 2V) to (V+ + 2V) or 30mA, (whichever occurs first)

Continuous Current (any terminal).....30mA

Peak Current, S, D
- (pulsed at 1ms, 10% duty cycle max) 100mA

Continuous Power Dissipation (T_A = +70°C)
- TSSOP (derate 9.4mW/°C above +70°C) 755mW
- Plastic DIP (derate 10.53mW/°C above +70°C) 842mW
- Narrow SO (derate 8.70mW/°C above +70°C) 696mW
- CERDIP (derate 10.00mW/°C above +70°C).....800mW

Operating Temperature Ranges
- DG408/DG409C_.....0°C to +70°C
- DG408/DG409D,E_ .....-40°C to +85°C
- DG408/DG409AK .....-55°C to +125°C

Storage Temperature Range.....-65°C to +150°C

Lead Temperature (soldering, 10sec) .....+300°C

Note 1: Signals on S_, D_, EN, A0, A1, or A2 exceeding V+ or V- are clamped by internal diodes. Limit forward current to maximum current ratings.

Stresses beyond those listed under "Absolute Maximum Ratings" may cause permanent damage to the device. These are stress ratings only, and functional operation of the device at these or any other conditions beyond those indicated in the operational sections of the specifications is not implied. Exposure to absolute maximum rating conditions for extended periods may affect device reliability.

ELECTRICAL CHARACTERISTICS—Dual Supplies

(V+ = 15V, V- = -15V, GND = 0V, V_{AH} = +2.4V, V_{AL} = +0.8V, T_A = T_{MIN} to T_{MAX}, unless otherwise noted.)

PARAMETER	SYMBOL	CONDITIONS				MIN	TYP (Note 2)	MAX	UNITS
SWITCH									
Analog Signal Range	V_{ANALOG}	(Note 3)				-15		15	V
Drain-Source On-Resistance	$r_{DS(ON)}$	I_S = -1.0mA, V_D = ±10V		T_A = +25°C			60	100	Ω
				T_A = T_{MIN} to T_{MAX}				125	
On-Resistance Matching Between Channels	$\Delta r_{DS(ON)}$	I_S = -1.0mA, V_D = ±10V (Note 4)		T_A = +25°C			1.5	8	Ω
				T_A = T_{MIN} to T_{MAX}				10	
On-Resistance Flatness	r_{FLAT}	I_S = -1.0mA, V_D = ±5V or 0V		T_A = +25°C			1.8	9	Ω
				T_A = T_{MIN} to T_{MAX}				12	
Source-Off Leakage Current (Note 5)	$I_{S(OFF)}$	V_D = +10V, V_S = ±10V, V_{EN} = 0V		T_A = +25°C		-0.5	0.01	0.5	nA
				T_A = T_{MIN} to T_{MAX}	C, D	-5		5	
					A	-50		50	
Drain-Off Leakage Current (Note 5)	$I_{D(OFF)}$	V_D = ±10V, V_S = +10V, V_{EN} = 0V	DG408	T_A = +25°C		-1	0.02	1	nA
				T_A = T_{MIN} to T_{MAX}	C, D	-10		10	
					A	-100		100	
		V_D = +10V, V_S = ±10V, V_{EN} = 0V	DG409	T_A = +25°C		-1	0.02	1	
				T_A = T_{MIN} to T_{MAX}	C, D	-5		5	
					A	-50		50	
Drain-On Leakage Current (Note 5)	$I_{D(ON)}$	V_D = ±10V, V_S = ±10V, sequence each switch on	DG408	T_A = +25°C		-1	0.02	1	nA
				T_A = T_{MIN} to T_{MAX}	C, D	-20		20	
					A	-100		100	
			DG409	T_A = +25°C		-1	0.02	1	
				T_A = T_{MIN} to T_{MAX}	C, D	-10		10	
					A	-50		50	

ELECTRICAL CHARACTERISTICS—Dual Supplies (continued)

($V+$ = 15V, $V-$ = -15V, GND = 0V, V_{AH} = +2.4V, V_{AL} = +0.8V, T_A = T_{MIN} to T_{MAX}, unless otherwise noted.)

PARAMETER	SYMBOL	CONDITIONS			MIN	TYP (Note 2)	MAX	UNITS
INPUT								
Input Current with Input Voltage High	I_{AH}	V_A = 2.4V or 15V			-1.0		1.0	µA
Input Current with Input Voltage Low	I_{AL}	V_{EN} = 0V or 2.4V, V_A = 0V			-1.0		1.0	µA
SUPPLY								
Power-Supply Range					±5		±20	V
Positive Supply Current	I+	V_{EN} = V_A = 0V or 4.5V		T_A = +25°C		16	30	µA
				T_A = T_{MIN} to T_{MAX}			75	
		V_{EN} = 2.4V, $V_{A(ALL)}$ = 0V or 2.4V		T_A = +25°C		0.075	0.5	mA
				T_A = T_{MIN} to T_{MAX}			2	
Negative Supply Current	I-	V_{EN} = 2.4V, $V_{A(ALL)}$ = 0V or 2.4V		T_A = +25°C	-1		1	µA
				T_A = T_{MIN} to T_{MAX}	-10		10	
DYNAMIC								
Transition Time	t_{TRANS}	Figure 2		T_A = +25°C		85	175	ns
				T_A = T_{MIN} to T_{MAX}			250	
Break-Before-Make Interval	t_{OPEN}	Figure 4		T_A = +25°C	10	40		ns
Enable Turn-On Time	$t_{ON(EN)}$	Figure 3		T_A = +25°C		85	150	ns
				T_A = T_{MIN} to T_{MAX}			225	
Enable Turn-Off Time	$t_{OFF(EN)}$	Figure 3		T_A = +25°C			150	ns
				T_A = T_{MIN} to T_{MAX}			300	
Charge Injection (Note 3)	Q	C_L = 1.0nF, V_S = 0V, R_S = 0Ω, Figure 5		T_A = +25°C		2	15	pC
Off Isolation (Note 6)	V_{ISO}	V_{EN} = 0V, R_L = 1kΩ, f = 100kHz, Figure 6		T_A = +25°C		-75		dB
Crosstalk Between Input Channels	V_{CT}	V_{EN} = 2.4V, f = 100kHz, V_{GEN} = $1V_{P-P}$, R_L = 1kΩ, Figure 7		T_A = +25°C		-92		dB
Logic Input Capacitance	C_{IN}	f = 1MHz		T_A = +25°C		8		pF
Source-Off Capacitance	$C_{S(OFF)}$	f = 1MHz, V_{EN} = V_S = 0V, Figure 8		T_A = +25°C		3		pF
Drain-Off Capacitance	$C_{D(OFF)}$	f = 1MHz, V_{EN} = 0.8V V_D = 0V, Figure 8	DG408	T_A = +25°C		26		pF
			DG409			14		
Drain-On Capacitance	$C_{D(ON)}$ + $C_{S(ON)}$	f = 1MHz, V_{EN} = 2.4V V_D = 0V, Figure 8	DG408	T_A = +25°C		37		pF
			DG409			25		

Improved, 8-Channel/Dual 4-Channel, CMOS Analog Multiplexers

ELECTRICAL CHARACTERISTICS—Single Supply

($V+$ = 12V, $V-$ = 0V, GND = 0V, V_{AH} = +2.4V, V_{AL} = +0.8V, T_A = T_{MIN} to T_{MAX}, unless otherwise noted.)

PARAMETER	SYMBOL	CONDITIONS		MIN	TYP (Note 2)	MAX	UNITS
SWITCH							
Analog Signal Range	V_{ANALOG}	(Note 3)		0		12	V
Drain-Source On-Resistance	$r_{DS(ON)}$	I_S = -1.0mA V_D = 3V or 10V	T_A = +25°C		120	175	Ω
DYNAMIC							
Transition Time (Note 3)	t_{TRANS}	V_{S1} = 8V, V_{S8} = 0V, V_A = 0V, Figure 2	T_A = +25°C		115	450	ns
Enable Turn-On Time (Note 3)	$t_{ON(EN)}$	V_{AL} = 0V, V_{S1} = 5V, Figure 3	T_A = +25°C		100	600	ns
Enable Turn-Off Time (Note 3)	$t_{OFF(EN)}$	V_{AL} = 0V, V_{S1} = 5V, Figure 3	T_A = +25°C		75	300	ns
Charge Injection	Q	C_L = 1.0nF, V_S = 0V, R_S = 0Ω	T_A = +25°C		2		pC

Note 2: The algebraic convention where the most negative value is a minimum and the most positive value a maximum is used in this data sheet.

Note 3: Guaranteed by design.

Note 4: $\Delta R_{ON} = R_{ON(MAX)} - R_{ON(MIN)}$. On-resistance match between channels and flatness are guaranteed only with specified voltages. Flatness is defined as the difference between the maximum and minimum value of on-resistance as measured at the extremes of the specified analog signal range.

Note 5: Leakage parameters are 100% tested at the maximum rated hot temperature and guaranteed by correlation at +25°C.

Note 6: Off isolation = 20log V_D/V_S, where V_D = output and V_S = input to off switch.

Typical Operating Characteristics

(T_A = +25°C, unless otherwise noted.)

ON-RESISTANCE vs. V_D (DUAL SUPPLIES)

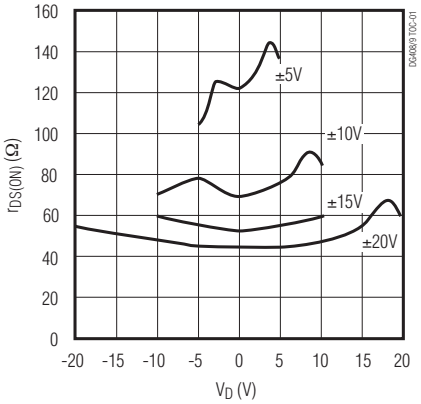

ON-RESISTANCE vs. V_D AND TEMPERATURE (DUAL SUPPLIES)

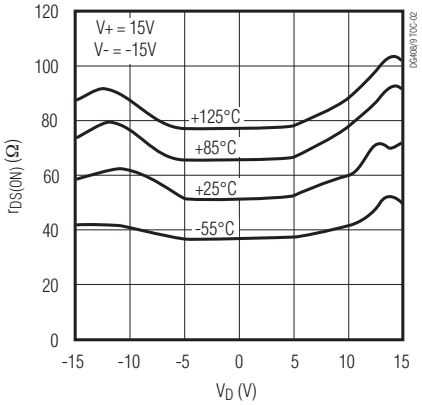

ON-RESISTANCE vs. V_D (SINGLE SUPPLY)

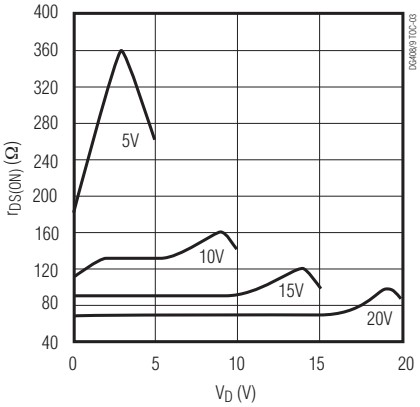

ON-RESISTANCE vs. V_D AND TEMPERATURE (SINGLE SUPPLY)

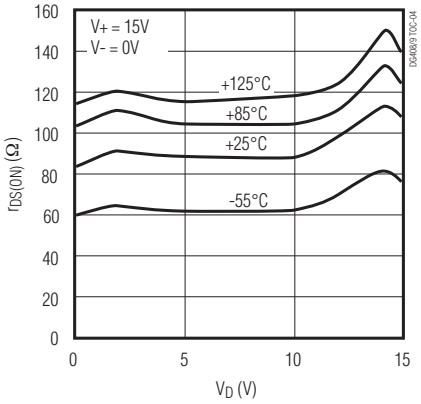

OFF LEAKAGE vs. TEMPERATURE

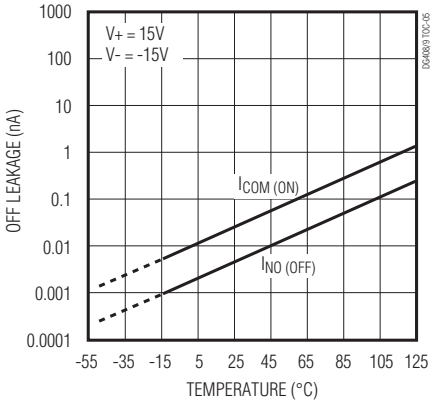

ON LEAKAGE vs. TEMPERATURE

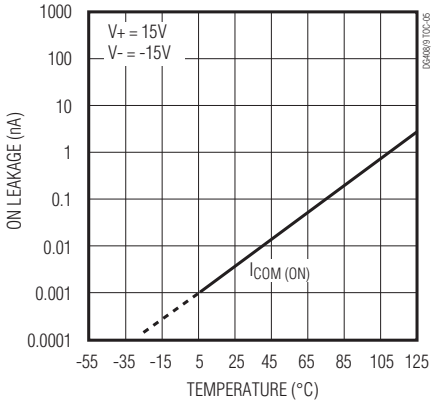

CHARGE INJECTION vs. V_D

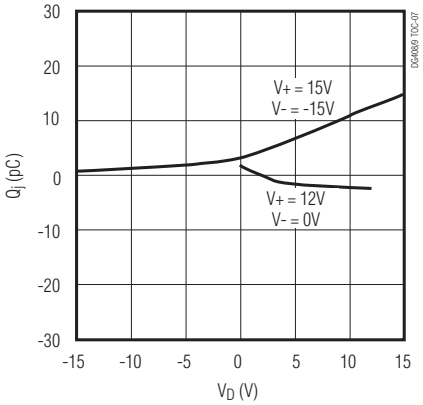

SUPPLY CURRENT vs. TEMPERATURE

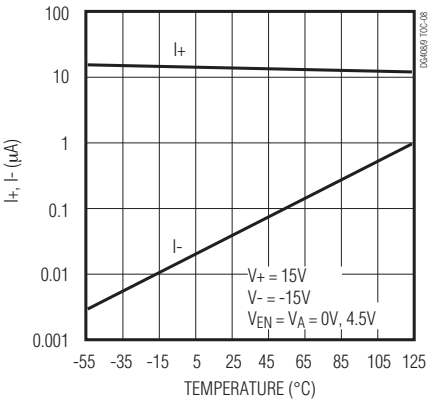

Improved, 8-Channel/Dual 4-Channel, CMOS Analog Multiplexers

Pin Description

PIN		NAME	FUNCTION
DG408	DG409		
1, 15, 16	—	A0, A2, A1	Address Inputs
—	1, 16	A0, A1	Address Inputs
2	2	EN	Enable Input
3	3	V-	Negative Supply Voltage Input
4–7	—	S1–S4	Bidirectional Analog Inputs
—	4–7	S1A–S4A	Bidirectional Analog Inputs
8	—	D	Bidirectional Analog Output
—	8, 9	DA, DB	Bidirectional Analog Outputs
9–12	—	S8–S5	Bidirectional Analog Inputs
—	10–13	S4B–S1B	Bidirectional Analog Inputs
13	14	V+	Positive Supply Voltage Input
14	15	GND	Ground

Applications Information

Operation with Supply Voltages Other than 15V

Using supply voltages less than ±15V reduces the analog signal range. The DG408/DG409 switches operate with ±5V to ±20V bipolar supplies or with a +5V to +40V single supply. Connect V- to GND when operating with a single supply. Both device types can also operate with unbalanced supplies, such as +24V and -5V. The *Typical Operating Characteristics* graphs show typical on-resistance with 20V, 15V, 10V, and 5V supplies. (Switching times increase by a factor of two or more for operation at 5V.)

Overvoltage Protection

Proper power-supply sequencing is recommended for all CMOS devices. Do not exceed the absolute maximum ratings, because stresses beyond the listed ratings may cause permanent damage to the devices. Always sequence V+ on first, then V-, followed by the logic inputs, S or D. If power-supply sequencing is not possible, add two small signal diodes in series with supply pins for overvoltage protection (Figure 1). Adding diodes reduces the analog signal range to 1V below V+ and 1V above V-, but does not affect the devices' low switch resistance and low leakage characteristics. Device operation is unchanged, and the difference between V+ and V- should not exceed +44V.

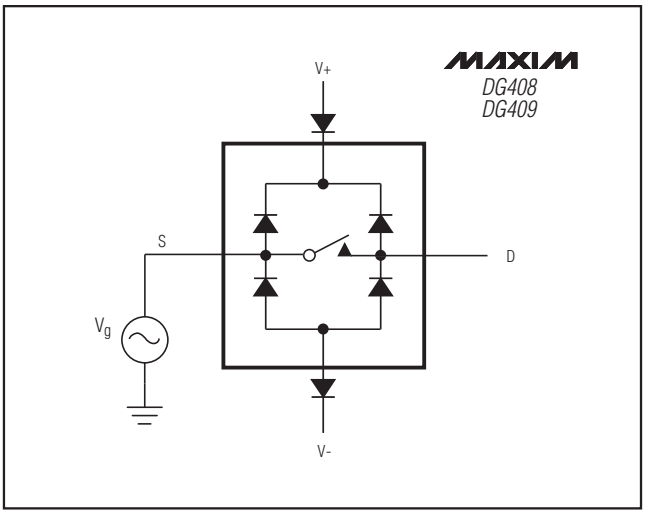

Figure 1. Overvoltage Protection Using External Blocking Diodes

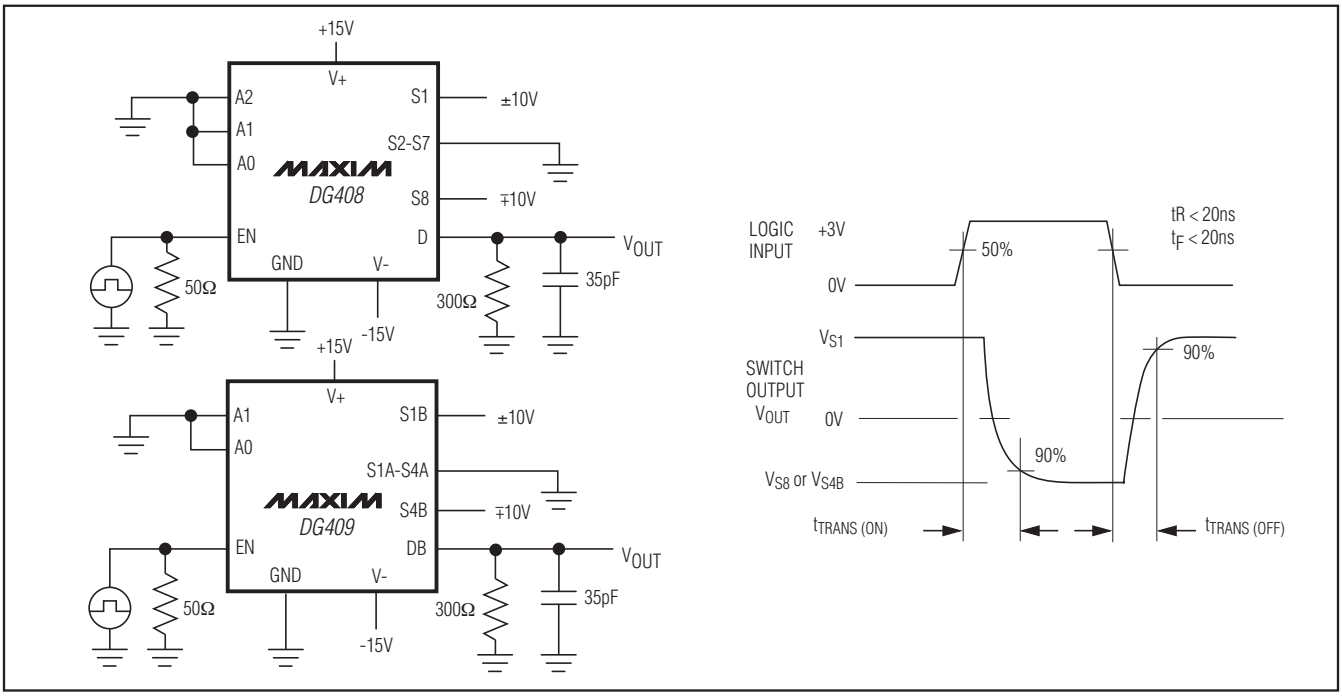

Figure 2. Transition Time

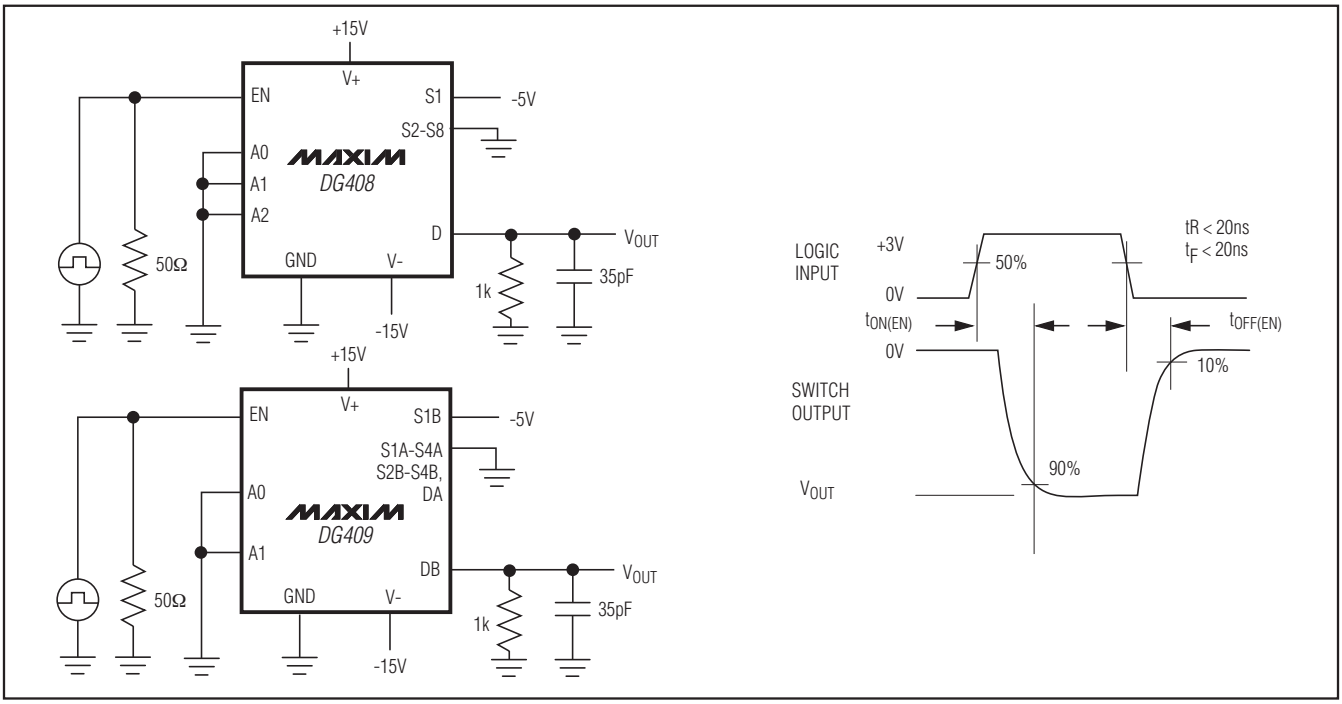

Figure 3. Enable Switching Time

Improved, 8-Channel/Dual 4-Channel, CMOS Analog Multiplexers

Test Circuits/Timing Diagrams (continued)

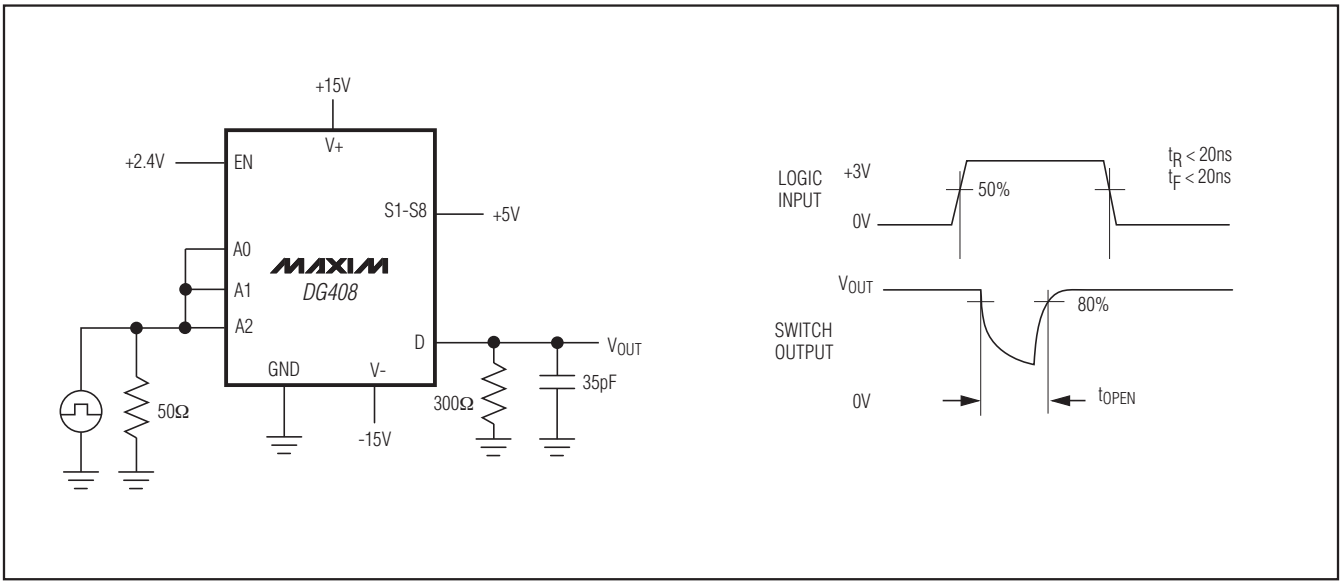

Figure 4. Break-Before-Make Interval

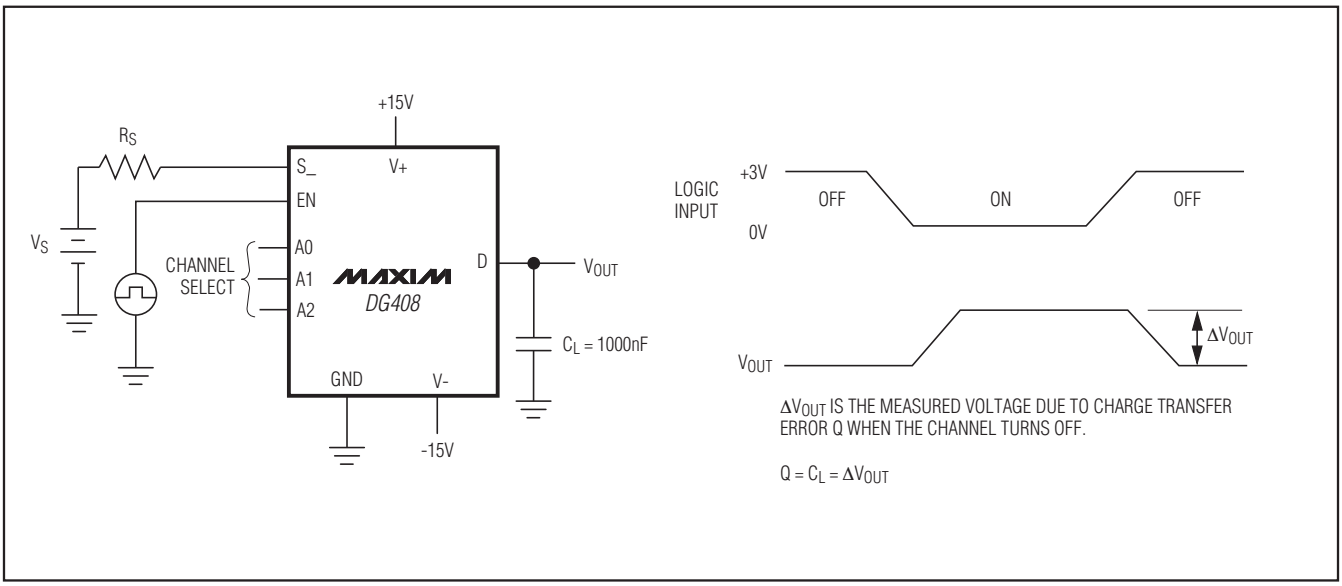

Figure 5. Charge Injection

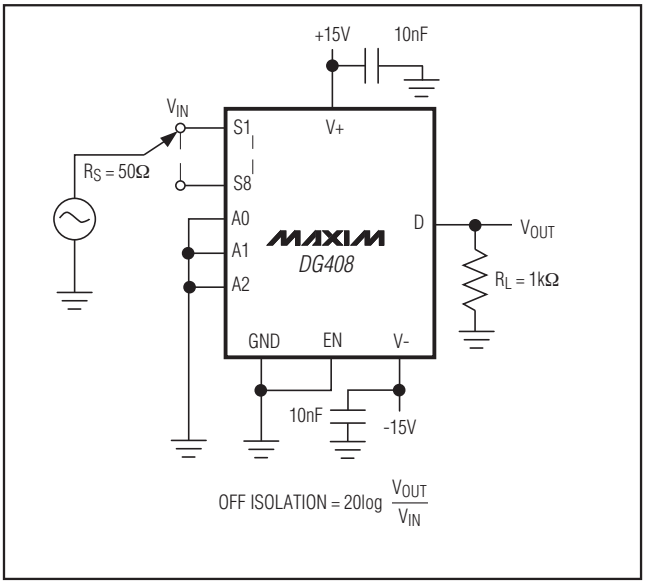

Figure 6. Off Isolation

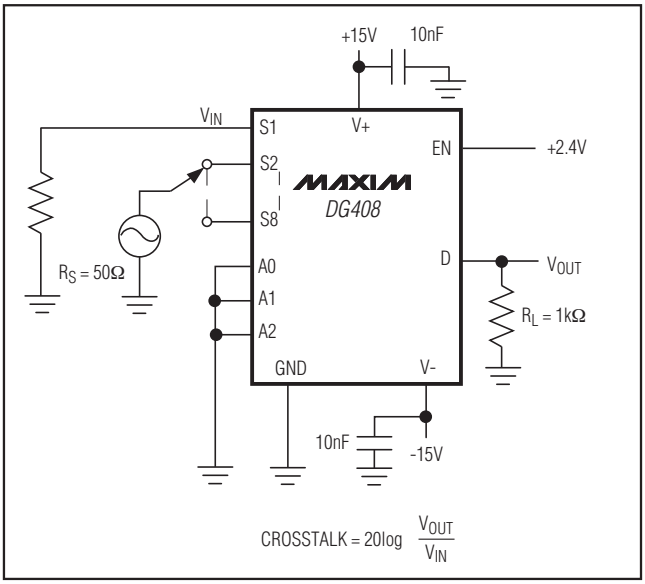

Figure 7. Crosstalk

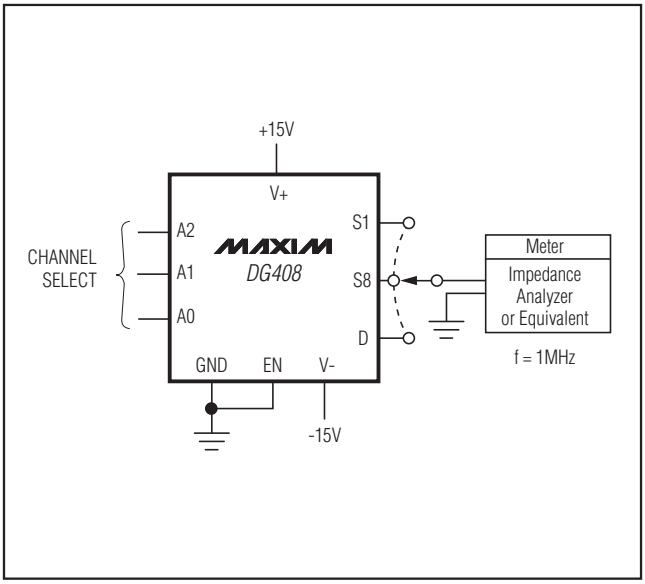

Figure 8. Source/Drain Capacitance

Improved, 8-Channel/Dual 4-Channel, CMOS Analog Multiplexers

Pin Configurations/Functional Diagrams/Truth Tables (continued)

TOP VIEW

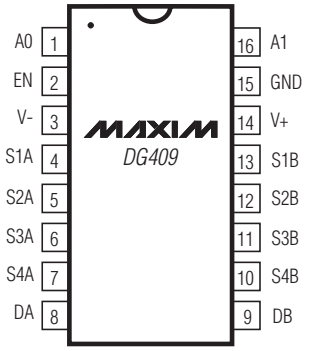

DIP/SO/TSSOP

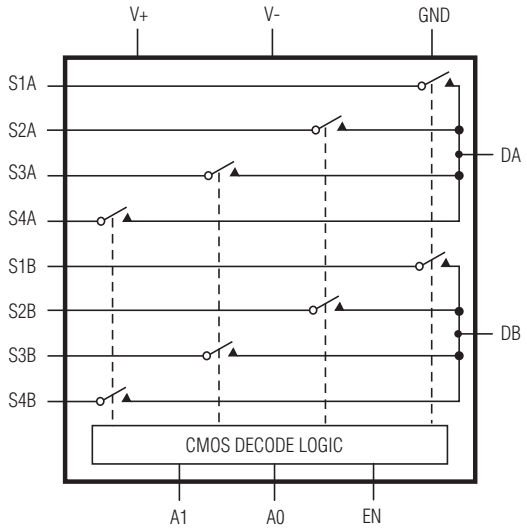

DG409 4-CHANNEL DIFFERENTIAL MUX/DEMUX

A2	A1	A0	EN	ON SWITCH
X	X	X	0	None
0	0	0	1	1
0	0	1	1	2
0	1	0	1	3
0	1	1	1	4
1	0	0	1	5
1	0	1	1	6
1	1	0	1	7
1	1	1	1	8

DG408

LOGIC "0" $V_{AL} \leq 0.8V$, LOGIC "1" $V_{AH} \geq 2.4V$

A1	A0	EN	ON SWITCH
X	X	0	None
0	0	1	1
0	1	1	2
1	0	1	3
1	1	1	4

DG409

LOGIC "0" $V_{AL} \leq 0.8V$, LOGIC "1" $V_{AH} \geq 2.4V$

Ordering Information (continued)

PART	TEMP RANGE	PIN-PACKAGE
DG408DK	-40°C to +85°C	16 CERDIP
DG408AK	-55°C to +125°C	16 CERDIP**
DG408MY/PR	-55°C to +125°C	16 SO***
DG408MY/PR-T	-55°C to +125°C	16 SO***
DG409CUE	0°C to +70°C	16 TSSOP
DG409CJ	0°C to +70°C	16 Plastic DIP
DG409CY	0°C to +70°C	16 Narrow SO
DG409C/D	0°C to +70°C	Dice*
DG409EUE	-40°C to +85°C	16 TSSOP
DG409DJ	-40°C to +85°C	16 Plastic DIP
DG409DK	-40°C to +85°C	16 CERDIP
DG409AK	-55°C to +125°C	12 CERDIP**
DG409MY/PR	-55°C to +125°C	16 SO***
DG409MY/PR-T	-55°C to +125°C	16 SO***

**Contact factory for dice specifications.*
***Contact factory for availability and processing to MIL-STD-883.*

Package Information

For the latest package outline information and land patterns, go to **www.maxim-ic.com/packages**.

PACKAGE TYPE	PACKAGE CODE	DOCUMENT NO.
16 TSSOP	U16-1	**21-0066**
16 Plastic DIP	P16-2	**21-0043**
16 Narrow SO	S16-5	**21-0041**
16 SO	S16-5	**21-0041**
16 CERDIP	J16-3	**21-0590**

Improved, 8-Channel/Dual 4-Channel, High-Performance, CMOS Analog Multiplexers

Revision History

REVISION NUMBER	REVISION DATE	DESCRIPTION	PAGES CHANGED
3	8/02	Changed operating voltage and TSSOP packaging	—
4	9/08	Added rugged plastic information	1, 11

Maxim cannot assume responsibility for use of any circuitry other than circuitry entirely embodied in a Maxim product. No circuit patent licenses are implied. Maxim reserves the right to change the circuitry and specifications without notice at any time.

© 2008 Maxim Integrated Products MAXIM is a registered trademark of Maxim Integrated Products, Inc.