380-010
EMI/RFI Non-Environmental Backshell
with Strain Relief
Type D - Direct Coupling - Low Profile

CONNECTOR DESIGNATORS

A-B*-C-D-E-F
G-H-J-K-L-S

*** Conn. Desig. B See Note 5**

DIRECT COUPLING

TYPE D INDIVIDUAL OR OVERALL SHIELD TERMINATION

380 F S 010 M 16 05 F 6

- Product Series
- Connector Designator
- Angle and Profile
  - A = 90°
  - B = 45°
  - S = Straight
- Basic Part No.
- Finish (Table II)
- Shell Size (Table I)
- Cable Entry (Tables V, VI)
- Strain Relief Style (F, G)
- Length: S only (1/2 inch increments: e.g. 6 = 3 inches)

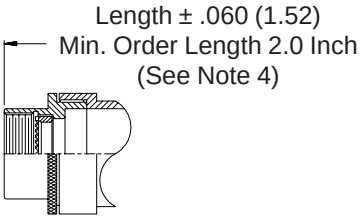

STYLE 2 (STRAIGHT See Note 1)

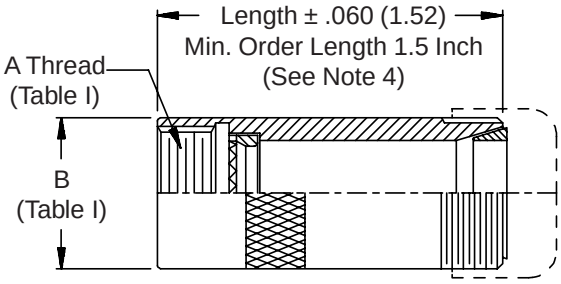

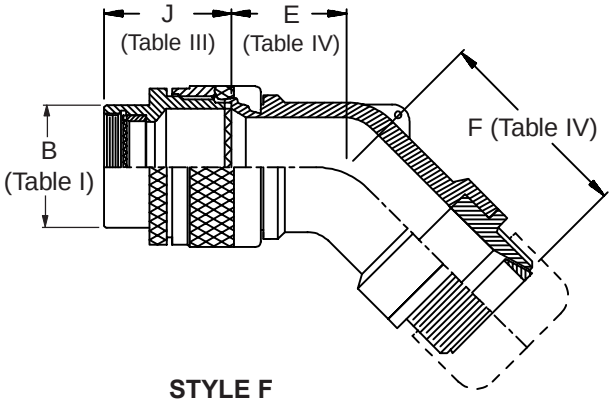

STYLE F
Light Duty
(Table V)

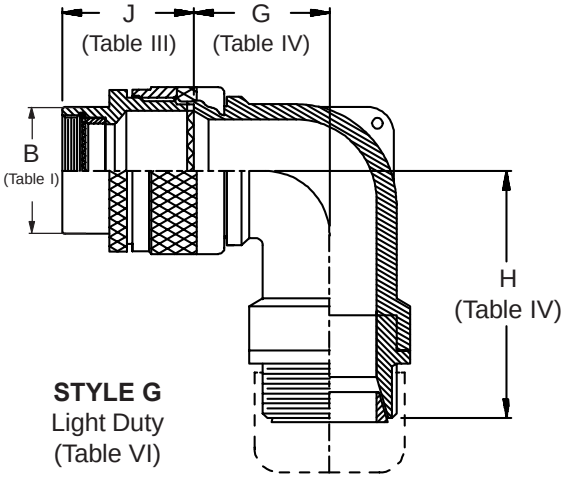

STYLE G
Light Duty
(Table VI)

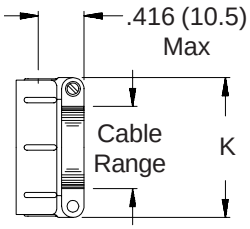

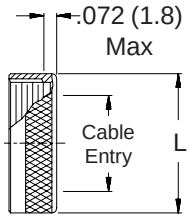

© 2005 Glenair, Inc. CAGE Code 06324 Printed in U.S.A.

380-010
EMI/RFI Non-Environmental Backshell
with Strain Relief
Type D - Direct Coupling - Low Profile

Glenair®

TABLE III: FRONT ADAPTER			
	J Max - Conn. Designator		
Shell Size	A-E-F J-H-L-S	D-B-G-K	C
08/09	1.180 (30.0)	1.440 (36.6)	
10/11	1.180 (30.0)	1.440 (36.6)	
12/13	1.180 (30.0)	1.440 (36.6)	1.735 (44.1)
14/15	1.180 (30.0)	1.440 (36.6)	1.915 (48.6)
16/17	1.380 (35.0)	1.560 (39.6)	1.915 (48.6)
18/19	1.380 (35.0)	1.560 (39.6)	1.915 (48.6)
20/21	1.380 (35.0)	1.560 (39.6)	1.915 (48.6)
22/23	1.380 (35.0)	1.560 (39.6)	1.915 (48.6)
24/25	1.380 (35.0)	1.560 (39.6)	1.915 (48.6)
28/29	1.610 (40.9)	1.560 (39.6)	1.915 (48.6)
32/33	1.610 (40.9)	1.750 (44.5)	1.915 (48.6)
36	1.610 (40.9)	1.750 (44.5)	1.915 (48.6)
40	1.610 (40.9)	2.190 (55.6)	1.915 (48.6)

See inside back cover fold-out or pages 13 and 14 for unabridged Tables I and II.

1. When maximum cable entry (page 22) is exceeded, Style 2 will be supplied. (Function S only).
2. Metric dimensions (mm) are indicated in parentheses.
3. Cable range is defined as the accommodations range for the wire bundle or cable. Dimensions shown are not intended for inspection criteria.
4. Consult factory for shorter lengths on straight backshells.
5. When using Connector Designator B refer to pages 18 and 19 for part number development.

TABLE IV: ELBOW DIMENSIONS				
Elbow Size	E Max	F Max	G Max	H Max
01	.457 (11.6)	1.500 (38.1)	.500 (12.7)	1.445 (36.7)
02	.457 (11.6)	1.500 (38.1)	.500 (12.7)	1.445 (36.7)
03	.520 (13.2)	1.510 (38.4)	.595 (15.1)	1.565 (39.8)
04	.582 (14.8)	1.580 (40.1)	.610 (15.5)	1.585 (40.3)
05	.738 (18.7)	1.770 (45.0)	.885 (22.5)	1.725 (43.8)
06	.926 (23.5)	1.960 (49.8)	.975 (24.8)	1.915 (48.6)
07	.926 (23.5)	1.960 (49.8)	.975 (24.8)	1.915 (48.6)
08	1.020 (25.9)	2.110 (53.6)	1.125 (28.6)	2.025 (51.4)
09	1.020 (25.9)	2.110 (53.6)	1.125 (28.6)	2.025 (51.4)
10	1.145 (29.1)	2.160 (54.9)	1.225 (31.1)	2.195 (55.8)

TABLE II: STANDARD FINISHES	
GLENAIR SYMBOL	FINISH
B	Cadmium Plate, Olive Drab
M	Electroless Nickel
NF	Cadmium Plate, Olive Drab Over Electroless Nickel

See Inside Back Cover for Additional Finish Options

TABLE V: CABLE ENTRY			
Dash No.	K Max	Cable Range Min	Cable Range Max
02	.968 (24.6)	.125 (3.2)	.250 (6.4)
03	1.046 (26.6)	.250 (6.4)	.375 (9.5)
04	1.156 (29.4)	.312 (7.9)	.500 (12.7)
05	1.218 (30.9)	.437 (11.1)	.625 (15.9)
06	1.343 (34.1)	.562 (14.3)	.750 (19.1)
07	1.468 (37.3)	.687 (17.4)	.875 (22.2)
08	1.593 (40.5)	.812 (20.6)	1.000 (25.4)
10	1.843 (46.8)	1.062 (27.0)	1.250 (31.8)

TABLE VI: CABLE ENTRY		
Dash No.	L Max	Cable Entry Max
01	.656 (16.7)	.125 (3.2)
02	.781 (19.8)	.250 (6.4)
03	.906 (23.0)	.375 (9.5)
04	1.031 (26.2)	.500 (12.7)
05	1.156 (29.4)	.625 (15.9)
06	1.281 (32.5)	.750 (19.1)
07	1.406 (35.7)	.875 (22.2)
08	1.531 (38.9)	1.000 (25.4)
09	1.656 (42.1)	1.125 (28.6)
10	1.781 (45.2)	1.250 (31.8)

© 2005 Glenair, Inc.