THIS DRAWING IS UNPUBLISHED. RELEASED FOR PUBLICATION -,- .
© COPYRIGHT - By - ALL RIGHTS RESERVED.

LOC	DIST
DF	DO

REVISIONS

P	LTR	DESCRIPTION	DATE	DWN	APVD
	K1	REVISED PER ECO-11-005139	21MAR11	RK	HMR

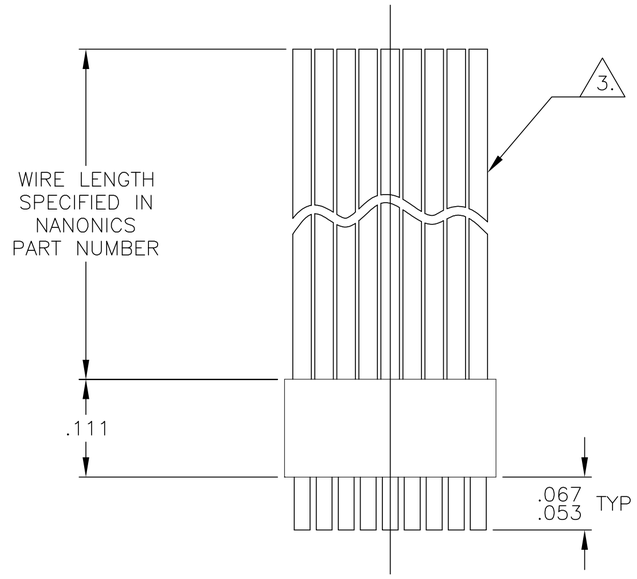

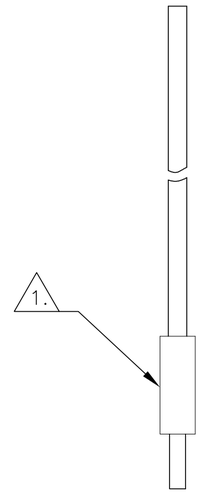

SIZE	C DIM	(L DIM)
04	.115	(.075)
09	.240	(.200)
15	.390	(.350)
4. 25	.640	(.600)
4. 37	.940	(.900)
4. 51	1.290	(1.250)

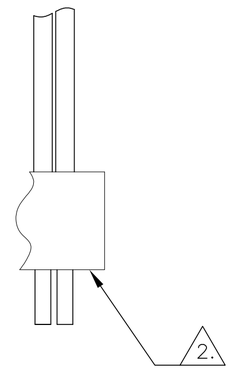

DETAIL A
POSITION "T" SHOWN FOR
REFERENCE

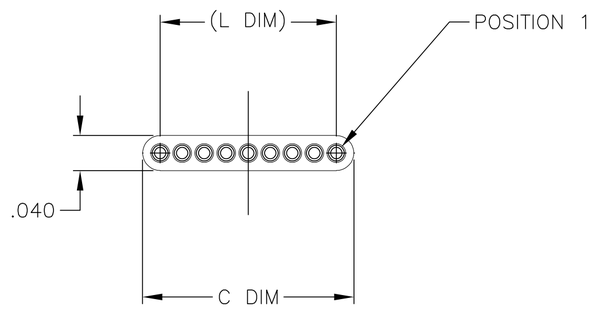

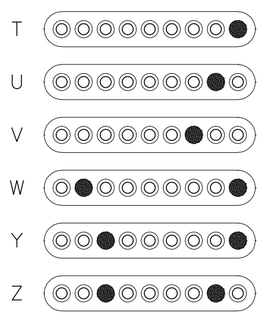

T POSITION 1
U POSITION 2
V POSITION 3
W POSITION 1, AND SECOND TO LAST POSITION
Y POSITION 1, AND THIRD TO LAST POSITION
Z POSITION 2, AND THIRD TO LAST POSITION

1. INSULATOR MATERIAL: LCP (LIQUID CRYSTAL POLYMER) PER ASTM D5138

2. OPTIONAL POLARIZATION POSITION SHOWN FOR REFERENCE ONLY. IF POLARIZATION GUIDE POST(S) ARE REQUIRED ON THE MATING PLUG, THE CORRESPONDING LOCATION MUST BE SPECIFIED IN THE NANONICS PART NUMBER. THE CONTACT CAVITY IS LEFT EMPTY FOR ACCEPTANCE OF THE PLUG GUIDE POST.

3. THIS CONFIGURATION MAY BE TERMINATED WITH 28 AWG SOLID, 30 AWG STRANDED OR SMALLER WIRE. CONDUCTOR TYPE AND LENGTH MUST BE SPECIFIED IN NANONICS PART NUMBER.

4. WHEN ORDERING THESE SIZES, FIRST CONSULT TE CONNECTIVITY/NANONICS FOR ADDITIONAL INFORMATION.

5. THIS DRAWING PREVIOUSLY IDENTIFIED AS NANONICS N10138/002

2. POLARIZING POSITIONS, SEE DETAIL A

THIS DRAWING IS A CONTROLLED DOCUMENT.

DIMENSIONS: INCHES

TOLERANCES UNLESS OTHERWISE SPECIFIED:
0 PLC ± -
1 PLC ± -
2 PLC ± .010
3 PLC ± .005
4 PLC ± -
ANGLES ± 1°

MATERIAL: SEE NOTES
FINISH: SEE NOTES

DWN D RYAN 16 APR 1992
CHK E BURGER 17 FEB 1993
APVD M STORRY 25 APR 2001
PRODUCT SPEC —
APPLICATION SPEC —
WEIGHT —

TE Connectivity

NAME: RECEPTACLE ASSEMBLY, UNSHROUDED STRIP, FLYING LEADS, PLASTIC

SIZE	CAGE CODE	DRAWING NO	RESTRICTED TO
A2	00779	C-1589449	—

CUSTOMER DRAWING | SCALE 8:1 | SHEET 1 OF 1 | REV K1

1589449

1471-9 (3/11)