RELEASED FOR PUBLICATION
© COPYRIGHT 20 BY ALL RIGHTS RESERVED

Project NR	REVISIONS						
PRJ-14-000003352	P	LTR	DESCRIPTION	DATE	DWN	APVD
		B	Diffusion N°331170	28JUL2015	MB	MV
		C	Add item 12 and 13 - Add note 13 Diffusion 231623	13APR2016	MB	MV
		D	Change reference item 2, 6 and 7 + update product spec & application spec - Diffusion 331914	21SEP2016	EL	MV

Vue isométrique - Echelle 1:2
Isometric view - Scale 1:2

Vue isométrique - Echelle 1:2
Isometric view - Scale 1:2

			Paper	5	1	YSPEC-408-157000-2	Instruction de montage Mounting instruction	13
-	- -	-	- -	1,5	1	0206-0329AS	Sachet déshydratant Deshydrating bag	12
-13	- -	-	Carton Carton	60	1	Y00000-0206-0217AS	Boite en carton Carton box	11
-	- -	-	Inox Stainless steel	23,2	3	CHCM08x40-I	Vis CHC Screw CHC	10
-	- -	-	Inox Stainless steel	2,56	3	MU-08-I	Rondelle plate Plain washer	9
-	- -	FMME 3017	Inox Stainless steel	1,72	3	1504-0030U4	Entretoise Spacer	8
-	- -	FMME 4016	Aluminium Aluminium	15,26	1	YA-UC-212590A-JQ00	Cône de serrage Clamping cone	7 (11)
-5	Argenture Silver plating	FMME 1001	Laiton Brass	58,74	1	YS-UC-212601A-AA1A	KIT de 3 contacts femelle AWG 10 KIT with 3 female contacts 10 AWG	6 (11)
-5	Argenture Silver plating	FMME 1001	Laiton Brass	473,57	1	YS-UC-212602A-AA1A	KIT de 24 contacts femelle AWG 12 et 14 KIT with 24 female contacts 12 and 14 AWG	5 (11)
-	- -	FMEL 31017	Néoprène Neoprene	258,63	1	YK-UC-211288A-YU00	Isolant femelle Female insert	4
-	- -	FMEL 31016	Néoprène Neoprene	1,4	27	1504-0008A4	Manchon Sleeve	3
-	- -	FTMP 651	Polycarbonate Polycarbonate	124,8	1	YK-UC-211276A-QK00	Isolant mixte Mixed insulator	2
-7	Conversion Cr3 Cr3 conversion	FMME 4010	ALUMINIUM Aluminium	1030,79	1	YF-UC-211326A-JG07	Corps de fiche - position 77,5 Plug body - position 77,5	1
Observations Remarks	Protection Plating	Fiche matière Data sheet	Matière Material	Masse (g) Weight (g)	Nbr Qty	Codification Part number	Désignation Designation	REP Item

1 ( ) : cotes pour information / *dimensions for information*
( ) : cotes de controle / *inspection dimensions*

2 Instructions de mise en oeuvre à appliquer par le client
Customer instructions to be applied by the customer

3

4

5 Ref. YS-UC-212601A-AA1A is a KIT with 3 contacts AWG10
Ref. YS-UC-212602A-AA1A is a KIT with 24 contacts AWG12/14

6 Laser marking :
TE + Commercial reference + Year-Week

7 White paint

8 Work instruction according to 118-157000-2

9 Groove made to differentiate contacts

10 Sleeves packaging separately and identified

11 Daniels manual crimping tool :
- Hand crimper HX4
- Die Y543

Daniels pneumatic crimping tool :
- Pneumatic pump HX23
- Die Y543

12 Tightening torque = 10N.m

13 A label with the commercial reference and the complete BOM is glued on the cardbox

14 Standards :
AAR S-512, APTA RP-E-019-99

15 Key

16 DRAFT ANGLE

17 Spécification de conditionnement 107-157003
Packaging Specification 107-157003

18 Clamping cone Rep 7 suitable with hose acc. to APTA PR-E-RP-019-99 and AAR S512 definition, 1 1/4inch in I.D. and 1 23/32 in O.D. (e.g. PARKER ref. GST II BLACK 15 BAR 32x45)

INSULATOR VIEW
SCALE 1:1

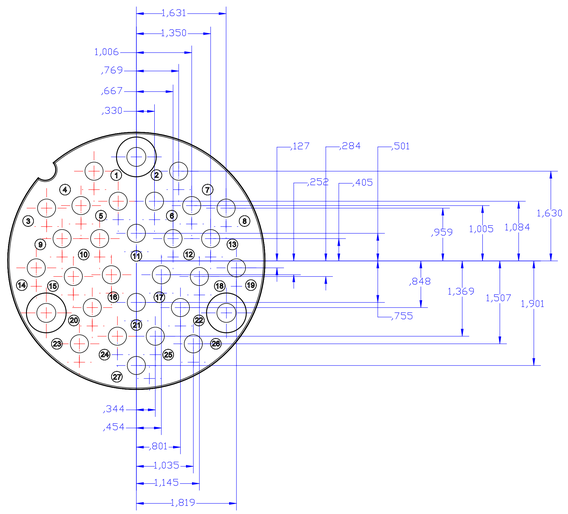

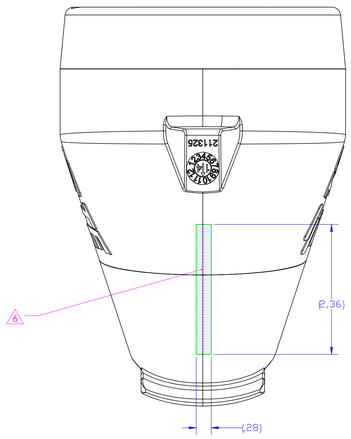

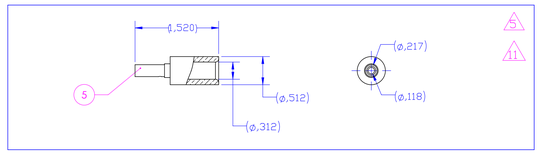

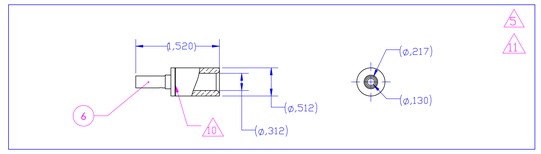

VIEW B-B

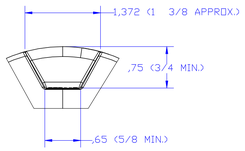

A-A VIEW

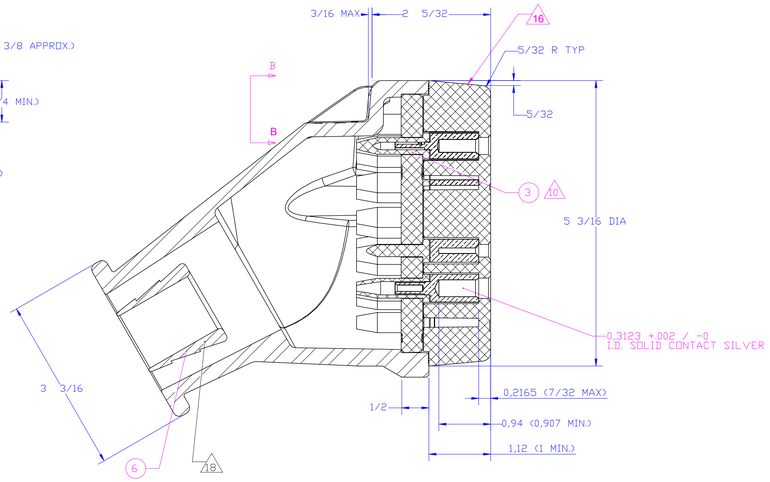

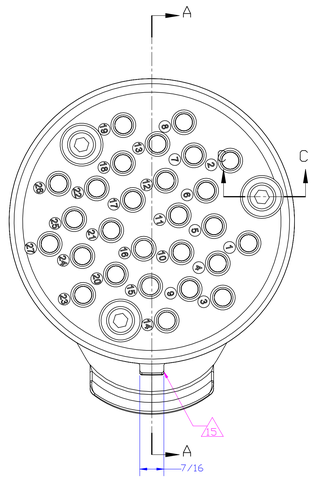

C-C VIEW

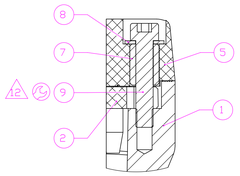

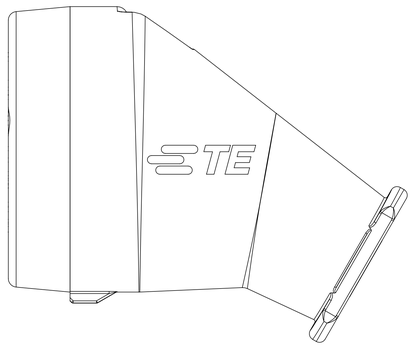

Référence commerciale / *Commercial reference* : 27P-PLU-3-01

YE-UC-212094A-0000
PART NO

THIS DRAWING IS A CONTROLLED DOCUMENT.

DES.	M.BONNIN	28JUL2015
CHK.	JF.GALIPAUD	28JUL2015
APPR.	M.VIMARD	28JUL2015

DIMENSIONS: inch
TOLERANCES UNLESS OTHERWISE SPECIFIED: 0 PLC ±.- ; 1 PLC ±.0 ; 2 PLC ±.00 ; 3 PLC ±.000 ; 4 PLC ±.0000 ; ANGLE ±.-°
MATERIAL: - / -
FINISH: - / -

TE Connectivity

NAME: TYPICAL AEM-7 PLUG

PRODUCT SPEC: 108-157001 (11)
APPLICATION SPEC: 408-157000-2 (11)
WEIGHT: 4.480 pound
SIZE: A0 | CAGE CODE: - | DRAWING NO: C-E1894-212094 | RESTRICTED TO: -
CUSTOMER DRAWING | SCALE: 1:1 | SHEET: 1 OF 1 | REV: D

4806-(3/13)
Solidworks DRAWING

Ref : 6815 BC ind B