REV.	ECN NO.	REVISIONS	DRN.	CKD.	APP.	DATE
A	——	NEW RELEASE	DC			

LED COLOR = YELLOW/GREEN BI-COLOR						
OPERATING CHARACTERISTICS AT 25°C AMBIENT						
CHARACTERISTICS	LED COLOR	MIN	TYP	MAX	UNITS	TEST CONDITIONS
LUMINOUS INTENSITY	YELLOW	2.5	4.3		mcd	I_F = 10 mA
	GREEN	2.5	6.3			
FORWARD VOLTAGE	YELLOW		2.1	2.8	V	I_F = 20 mA
	GREEN		2.1	2.8		
PEAK WAVELENGTH	YELLOW		585		nm	
	GREEN		565			
VIEWING ANGLE	YEL/GRN		80		Degree	
CAPACITANCE	YELLOW		15		pf	V_F = 0, f = 1 MHz
	GREEN		35			

ABSOLUTE MAXIMUM RATING AT 25°C AMBIENT	UNITS	YELLOW	GREEN
POWER DISSIPATION	mW	60	100
CONTINUOUS FORWARD CURRENT	mA	20	30
DERATE LINEARLY FROM 50°C	mA/°C	0.25	0.4
PEAK FORWARD CURRENT (1/10 DUTY CYCLE, 0.1 ms PULSE WIDTH)	mA	80	120
LEAD SOLDERING TEMPERATURE, 5 SEC., 1/16" FROM BODY	°C	260	260
OPERATING TEMPERATURE	°C	-55 TO 100	-55 TO 100
STORAGE TEMPERATURE	°C	-55 TO 100	-55 TO 100

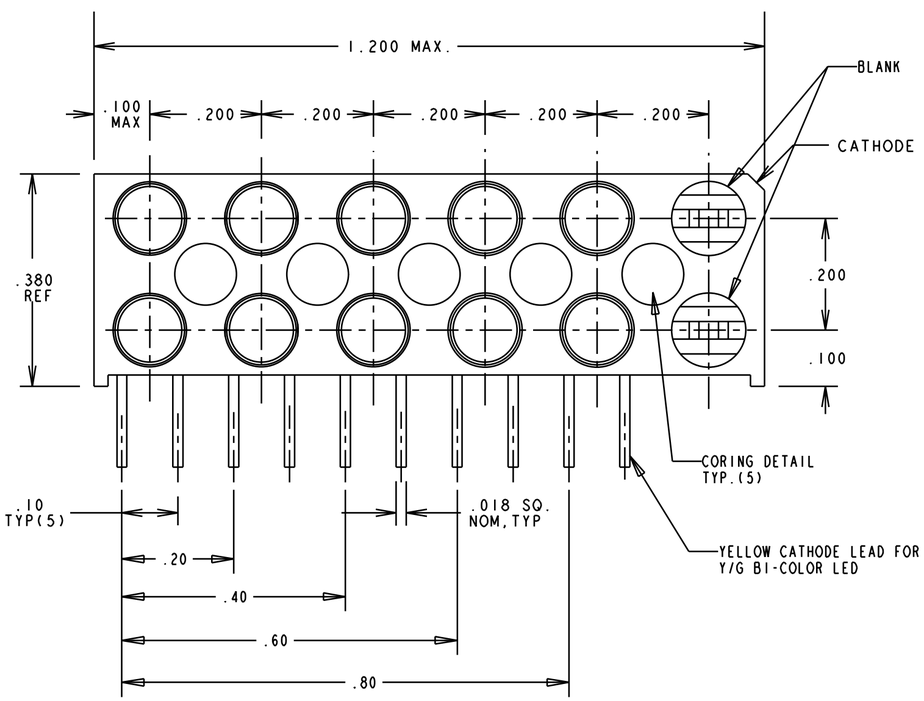

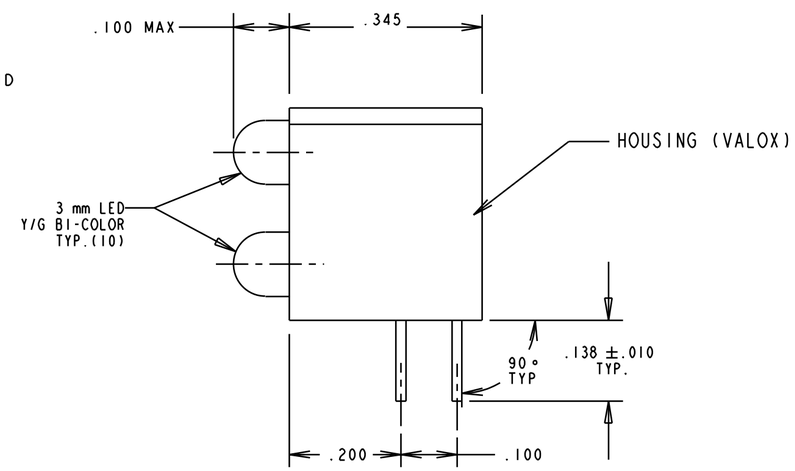

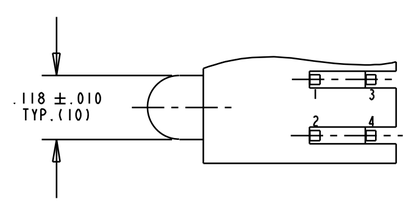

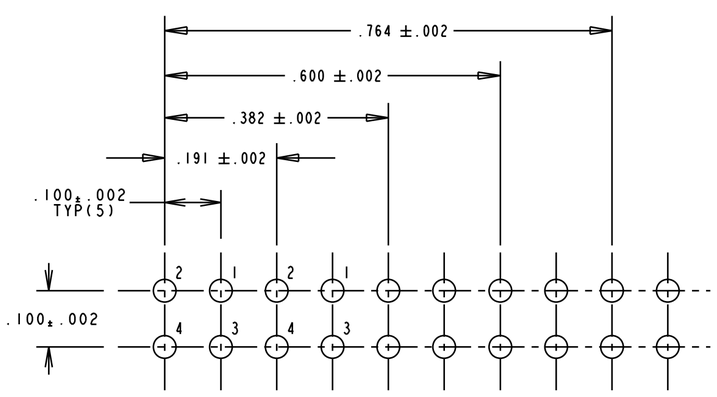

RECOMMENDED PC BOARD HOLE PATTERN

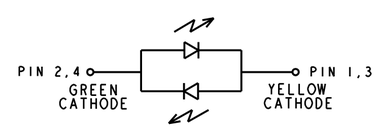

LED SCHEMATIC (TYP. 5)

NOTES:

1. LEADS TO FIT INTO HOLES SPACED AS PER HOLES PATTERN.
2. LEAD SPACING MEASURED AT HOUSING EXIT.
3. PIN NUMBERS FOR REFERENCE ONLY, DESIGNATION NON-EXISTENT ON PART.
4. DIALIGHT PART NO. 553-0012-809.

THIS DRAWING AND THE CONTENTS HEREIN ARE CONFIDENTIAL AND THE SOLE PROPERTY OF DIALIGHT. REPRODUCTION OF THIS DRAWING OR CONSTRUCTION OF ANY PARTS WITHIN THIS DRAWING ARE FORBIDDEN WITHOUT THE WRITTEN CONSENT OF DIALIGHT.

SCALE 5:1

ALL DIM'S IN: INCHES

TOLERANCES:
UNLESS OTHERWISE SPECIFIED
FRACTIONS: ±1/64
DECIMALS (.XX): ±.020
DECIMALS (.XXX): ±.015
ANGLES: ±3°

FINISH:

FSCM 83330

DRAWING NUMBER: C-16600

REV: A

TITLE: MULTIPLE BI-LEVEL CBI

MATERIAL

Dialight

1913 ATLANTIC AVE.
MANASQUAN, N.J. 08736

SHEET OF

FAMILY TABLES: