311-063
Composite Lamp Base Thread
EMI/RFI Environmental Shield Termination Backshell with Shrink Boot Porch and Direct Coupling Nut

CONNECTOR DESIGNATOR:	
A	MIL-DTL-5015, -26482 Series II, and -83723 Series I and III
F	MIL-DTL-38999 Series I, II
H	MIL-DTL-38999 Series III and IV
DIRECT COUPLING	

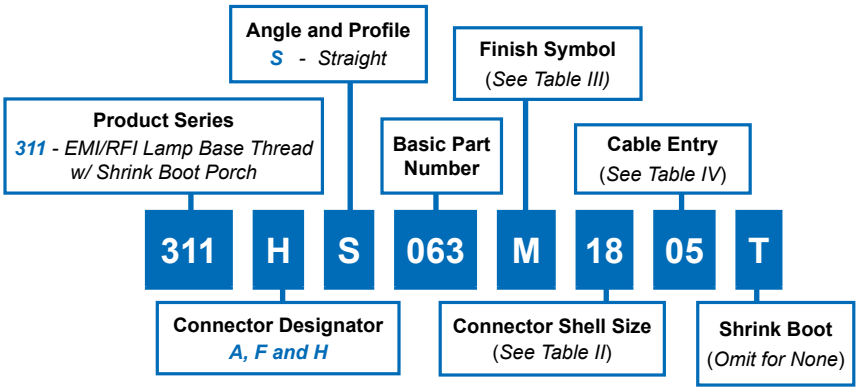

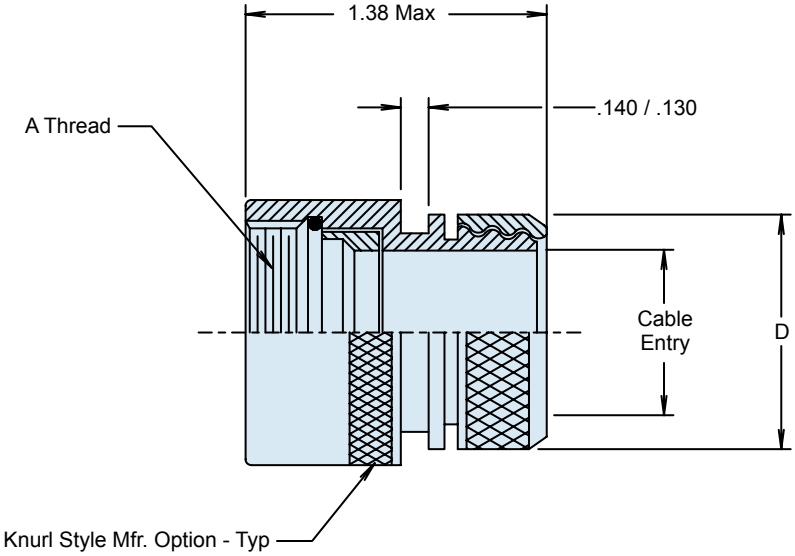

TABLE II: SHELL SIZE

Shell Size		Max Dash Number
A, F	H	
08	09	02
10	11	03
12	13	04
14	15	05
16	17	06
18	19	07
20	21	08
22	23	09
24	25	10

© 2009 Glenair, Inc.

TABLE III: FINISH	
Symbol	**Finish Description**
XM	2000 Hour Corrosion Resistant Electroless Nickel
XMT	2000 Hour Corrosion Resistant Ni-PTFE, Nickel-Fluorocarbon Polymer. *1000 Hour Grey™*
XW	2000 Hour Corrosion Resistant Cadmium/Olive Drab over Electroless Nickel

TABLE IV: CABLE ENTRY		
Dash Number	**D Max**	**Entry Max**
01	.448 (11.4)	.13 (3.3)
02	.515 (13.1)	.25 (6.4)
03	.640 (16.3)	.38 (9.7)
04	.765 (19.4)	.50 (12.7)
05	.930 (23.6)	.63 (16.0)
06	1.015 (25.8)	.75 (19.1)
07	1.140 (29.0)	.81 (20.6)
08	1.265 (32.1)	1.06 (26.9)
09	1.432 (36.4)	1.19 (30.2)
10	1.515 (38.5)	1.38 (35.1)

NOTES

1. See Table I in Intro for front-end dimensional details.
2. For angled shrink boots, contact Glenair engineering.
3. 770-001S**-0 shrink boot supplied with T option. See shrink boot product page for more details.
4. O-Ring will not be supplied with Connector Designator A.

© 2009 Glenair, Inc.

GLENAIR, INC. • 1211 AIR WAY • GLENDALE, CA 91201-2497 • 818-247-6000 • FAX 818-500-9912
www.glenair.com E-Mail: sales@glenair.com