THIS DRAWING IS UNPUBLISHED. RELEASED FOR PUBLICATION -,- .
© COPYRIGHT - BY TYCO ELECTRONICS CORPORATION. ALL RIGHTS RESERVED.

LOC	DIST
FT	0

REVISIONS

P	LTR	DESCRIPTION	DATE	DWN	APVD
	J1	REVISED PER ECR 10-018976	16SEPT10	JR	CR

MATERIAL:
HOUSING: THERMOPLASTIC, UL94V-0, BLACK
TERMINALS: BRIGHT TIN PLATED COPPER ALLOY
SCREWS: 8-32, ZINC PLATED STEEL.

ELECTRICAL PROPERTIES:
CURRENT RATING: 30A
VOLTAGE RATING: 600V
WIRE RANGE: 10-18 AWG (UL)
10-22 AWG (CSA)

MECHANICAL:
RECOMMENDED TORQUE: 20 IN-LB.
OPERATING TEMP.: -40°C TO +120°C

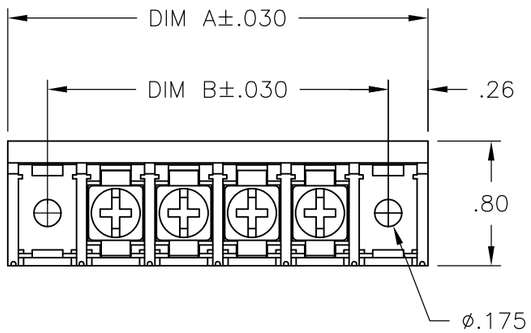

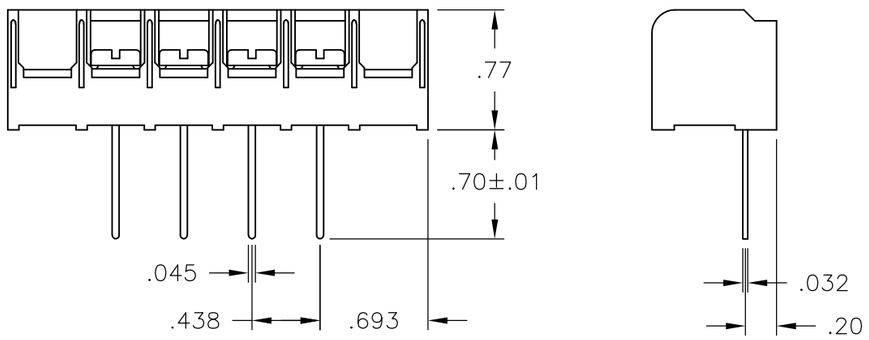

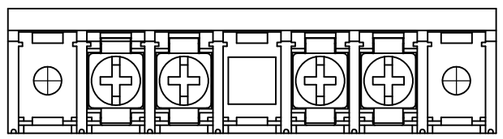

1546689-1

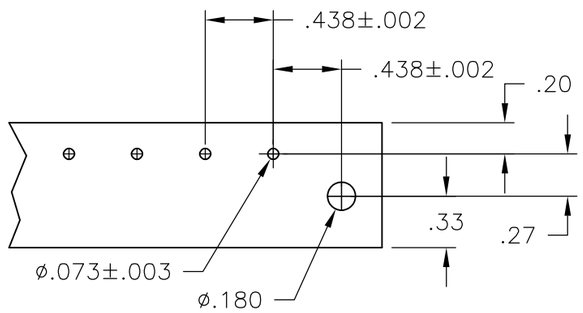

RECOMMENDED PCB LAYOUT

OBSOLETE	9.187	9.697	20	8WWV-20-006	796616-8
OBSOLETE	8.750	9.385	19	8WWV-19-006	-
	8.312	8.822	18	8WWV-18-006	1-796616-8
	7.875	8.385	17	8WWV-17-006	1-796616-7
	7.437	7.947	16	8WWV-16-006	796616-7
	7.000	7.510	15	8WWV-15-006	1-796616-5
	6.562	7.072	14	8WWV-14-006	1-796616-4
	6.125	6.635	13	8WWV-13-006	1-796616-3
	5.687	6.197	12	8WWV-12-006	1-796616-2
	5.250	5.760	11	8WWV-11-006	1-796616-1
	4.812	5.322	10	8WWV-10-006	1-796616-0
	4.375	4.885	9	8WWV-09-006	2-796616-2
	3.937	4.447	8	8WWV-08-006	2-796616-1
	3.500	4.010	7	8WWV-07-006	796616-6
	3.062	3.572	6	8WWV-06-006	9-1437659-1
	2.625	3.135	5	8WWV-05-006	8-1437659-9
	2.625	3.135	4	8WWV-05-652	1546689-1
	2.187	2.697	4	8WWV-04-006	8-1437659-4
	1.750	2.260	3	8WWV-03-006	2-796616-0
	1.312	1.822	2	8WWV-02-006	1546160-9
	DIM B	DIM A	NO OF POS	CATALOG NUMBER	TE PART NO

THIS DRAWING IS A CONTROLLED DOCUMENT.

DIMENSIONS: INCHES

TOLERANCES UNLESS OTHERWISE SPECIFIED:
0 PLC ± -
1 PLC ± -
2 PLC ± .02
3 PLC ± .005
4 PLC ± -
ANGLES ± 2°

MATERIAL -
FINISH -

DWN S SCHLEGEL 07FEB03
CHK S YODER 2/7/03
APVD S YODER 2/7/03
PRODUCT SPEC -
APPLICATION SPEC -
WEIGHT -

Tyco Electronics
Tyco Electronics Corporation
Harrisburg, PA 17105-3608

NAME
-
8WWV-XX-006 ASSEMBLY
-

SIZE	CAGE CODE	DRAWING NO	RESTRICTED TO
A3	00779	C-8-1437659-6	-

CUSTOMER DRAWING | SCALE 1:1 | SHEET 1 OF 1 | REV J1