M24256-BW M24256-BR M24256-BF M24256-DR M24256-DF

256-Kbit serial I²C bus EEPROM

Datasheet - production data

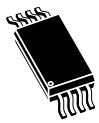

TSSOP8 (DW)
169 mil width

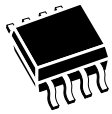

SO8 (MN)
150 mil width

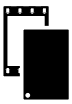

UFDFPN8 (MC)
DFN8 - 2x3 mm

WLCSP (CS)

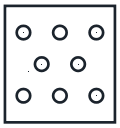

WLCSP (CU)

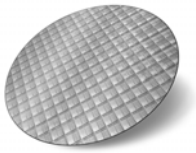

Unsawn wafer

Features

- Compatible with all I²C bus modes:
  - 1 MHz
  - 400 kHz
  - 100 kHz
- Memory array:
  - 256 Kbit (32 Kbyte) of EEPROM
  - Page size: 64 byte
  - Additional Write lockable page (M24256-D order codes)
- Single supply voltage and high speed:
  - 1 MHz clock from 1.7 V to 5.5 V
- Write:
  - Byte Write within 5 ms
  - Page Write within 5 ms
- Operating temperature range:
  - from -40 °C up to +85 °C
- Random and sequential Read modes
- Write protect of the whole memory array
- Enhanced ESD/Latch-Up protection
- More than 4 million Write cycles
- More than 200-years data retention

Packages

- SO8 ECOPACK2®
- TSSOP8 ECOPACK2®
- UFDFPN8 ECOPACK2®
- WLCSP ECOPACK2®
- Unsawn wafer (each die is tested)

This is information on a product in full production. www.st.com

Contents

1 Description 6

2 Signal description 8

2.1 Serial Clock (SCL) 8

2.2 Serial Data (SDA) 8

2.3 Chip Enable (E2, E1, E0) 8

2.4 Write Control ($\overline{WC}$) 8

2.5 V_{SS} (ground) 8

2.6 Supply voltage (V_{CC}) 9

2.6.1 Operating supply voltage (V_{CC}) 9

2.6.2 Power-up conditions 9

2.6.3 Device reset 9

2.6.4 Power-down conditions 9

3 Memory organization 10

4 Device operation 11

4.1 Start condition 12

4.2 Stop condition 12

4.3 Data input 12

4.4 Acknowledge bit (ACK) 12

4.5 Device addressing 13

5 Instructions 14

5.1 Write operations 14

5.1.1 Byte Write 15

5.1.2 Page Write 16

5.1.3 Write Identification Page (M24256-D only) 17

5.1.4 Lock Identification Page (M24256-D only) 17

5.1.5 ECC (Error Correction Code) and Write cycling 17

5.1.6 Minimizing Write delays by polling on ACK 18

5.2 Read operations 19

5.2.1 Random Address Read 20

5.2.2 Current Address Read 20
5.2.3 Sequential Read 20
5.3 Read Identification Page (M24256-D only) 20
5.4 Read the lock status (M24256-D only) 21

6 Initial delivery state 22

7 Maximum rating 23

8 DC and AC parameters 24

9 Package information 33
9.1 UFDFPN8 (DFN8) package information 33
9.2 TSSOP8 package information 34
9.3 SO8N package information 36
9.4 WLCSP8 (CS) package information 38
9.5 WLCSP8 (CU) package information 40

10 Ordering information 42

11 Revision history 45

List of tables

Table 1. Signal names . . . 6
Table 2. Signals vs. bump position . . . 7
Table 3. Device select code . . . 13
Table 4. Most significant address byte . . . 14
Table 5. Least significant address byte . . . 14
Table 6. Absolute maximum ratings . . . 23
Table 7. Operating conditions (voltage range W) . . . 24
Table 8. Operating conditions (voltage range R) . . . 24
Table 9. Operating conditions (voltage range F) . . . 24
Table 10. AC measurement conditions . . . 24
Table 11. Input parameters . . . 25
Table 12. Cycling performance by groups of four bytes . . . 25
Table 13. Memory cell data retention . . . 25
Table 14. DC characteristics (M24256-BW, device grade 6) . . . 26
Table 15. DC characteristics (M24256-BR, M24256-DR device grade 6) . . . 27
Table 16. DC characteristics (M24256-BF, M24256-DF, device grade 6) . . . 28
Table 17. 400 kHz AC characteristics . . . 29
Table 18. 1 MHz AC characteristics . . . 30
Table 19. UFDFPN8 – 2x3 mm, 0.55 thickness, ultra thin fine pitch dual flat package, no lead - package mechanical data . . . 33
Table 20. TSSOP8 – 3 x 4.4 mm, 0.65 mm pitch, 8-lead thin shrink small outline, package mechanical data . . . 34
Table 21. SO8N – 3.9x4.9 mm, 8-lead plastic small outline, 150 mils body width, package mechanical data . . . 36
Table 22. WLCSP (CS)- 8-bump, 1.289 x 1.376 mm, 0.4 mm pitch wafer level chip scale package mechanical data . . . 38
Table 23. WLCSP (CU)- 8 balls, 1.289x1.1.309 mm, 0.4 mm pitch, with BSC, wafer level chip scale mechanical data . . . 40
Table 24. Ordering information scheme . . . 42
Table 25. Ordering information scheme (unsawn wafer) . . . 43
Table 26. Document revision history . . . 45

List of figures

Figure 1. Logic diagram . . . 6
Figure 2. 8-pin package connections, top view . . . 6
Figure 3. WLCSP connections . . . 7
Figure 4. Chip enable inputs connection . . . 8
Figure 5. Block diagram . . . 10
Figure 6. I^2C bus protocol . . . 11
Figure 7. Write mode sequences with $\overline{WC}$ = 0 (data write enabled) . . . 15
Figure 8. Write mode sequences with $\overline{WC}$ = 1 (data write inhibited) . . . 16
Figure 9. Write cycle polling flowchart using ACK . . . 18
Figure 10. Read mode sequences . . . 19
Figure 11. AC measurement I/O waveform . . . 24
Figure 12. Maximum Rbus value versus bus parasitic capacitance (Cbus) for an I2C bus at maximum frequency fC = 400 kHz . . . 31
Figure 13. Maximum R_{bus} value versus bus parasitic capacitance C_{bus}) for an I^2C bus at maximum frequency f_C = 1MHz . . . 31
Figure 14. AC waveforms . . . 32
Figure 15. UFDFPN8 – 2x3 mm, 0.55 thickness, ultra thin fine pitch dual flat package, no lead - package outline . . . 33
Figure 16. TSSOP8 – 3x4.4 mm, 0.65 mm pitch, 8-lead thin shrink small outline, package outline . . . 34
Figure 17. SO8N – 3.9x4.9 mm, 8-lead plastic small outline, 150 mils body width, package outline . 36
Figure 18. SO8N – 3.9x4.9 mm, 8-lead plastic small outline, 150 mils body width, package recommended footprint . . . 37
Figure 19. WLCSP (CS) - 8-bump, 1.289 x 1.376 mm, 0.4 mm pitch wafer level chip scale package outline . . . 38
Figure 20. WLCSP (CS) - 8-bump, 1.289 x 1.376 mm, 0.4 mm pitch wafer level chip scale package recommended footprint . . . 39
Figure 21. WLCSP (CU)- 8 balls, 1.289x1.1.309 mm, 0.4 mm pitch, with BSC, wafer level chip scale package outline . . . 40
Figure 22. WLCSP (CU)- 8 balls, 1.289x1.1.309 mm, 0.4 mm pitch, with BSC, wafer level chip scale recommended footprint . . . 41

1 Description

The M24256 is a 256-Kbit I^{2}C-compatible EEPROM (Electrically Erasable PROgrammable Memory) organized as 32 K × 8 bits.

The M24256-BW can operate with a supply voltage from 2.5 V to 5.5 V, the M24256-BR and M24256-DR can operate with a supply voltage from 1.8 V to 5.5 V, and the M24256-BF and M24256-DF can operate with a supply voltage from 1.7 V to 5.5 V. All these devices operate with a clock frequency of 1 MHz (or less), over an ambient temperature range of –40 °C / +85 °C.

The M24256-D offers an additional page, named the Identification Page (64 byte). The Identification Page can be used to store sensitive application parameters which can be (later) permanently locked in Read-only mode.

Figure 1. Logic diagram

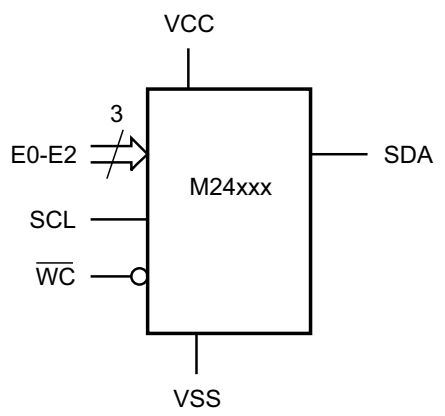

Table 1. Signal names

Signal name	Function	Direction
E2, E1, E0	Chip Enable	Input
SDA	Serial Data	I/O
SCL	Serial Clock	Input
$\overline{WC}$	Write Control	Input
V_{CC}	Supply voltage	-
V_{SS}	Ground	-

Figure 2. 8-pin package connections, top view

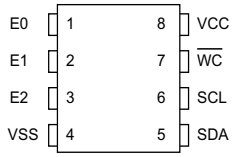

1. See *Section 9: Package information* for package dimensions, and how to identify pin 1

Figure 3. WLCSP connections

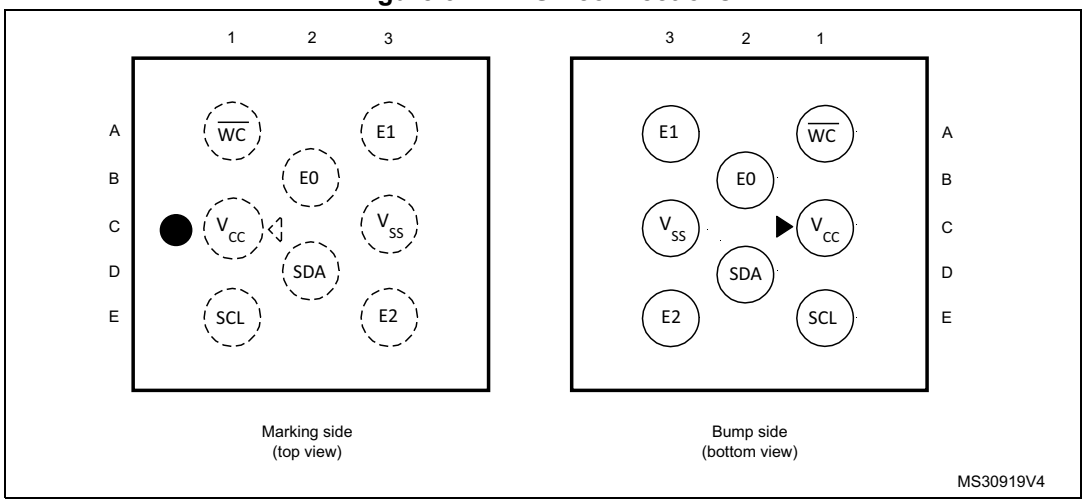

Table 2. Signals vs. bump position

Position	A	B	C	D	E
1	$\overline{WC}$	-	V_{CC}	-	SCL
2	-	E0	-	SDA	-
3	E1	-	V_{SS}	-	E2

2 Signal description

2.1 Serial Clock (SCL)

The signal applied on the SCL input is used to strobe the data available on SDA(in) and to output the data on SDA(out).

2.2 Serial Data (SDA)

SDA is an input/output used to transfer data in or data out of the device. SDA(out) is an open drain output that may be wire-OR'ed with other open drain or open collector signals on the bus. A pull-up resistor must be connected from Serial Data (SDA) to V_{CC} (*Figure 12* indicates how to calculate the value of the pull-up resistor).

2.3 Chip Enable (E2, E1, E0)

(E2,E1,E0) input signals are used to set the value that is to be looked for on the three least significant bits (b3, b2, b1) of the 7-bit device select code (see *Table 3*). These inputs must be tied to V_{CC} or V_{SS}, as shown in *Figure 4*. When not connected (left floating), these inputs are read as low (0).

Figure 4. Chip enable inputs connection

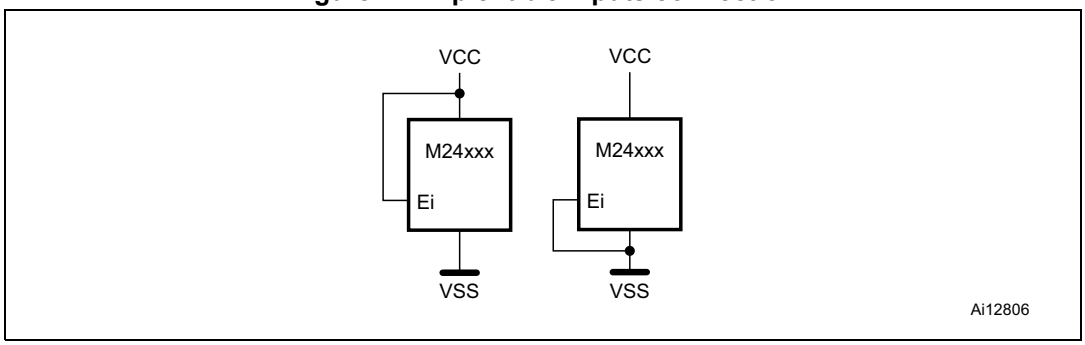

2.4 Write Control ($\overline{WC}$)

This input signal is useful for protecting the entire contents of the memory from inadvertent write operations. Write operations are disabled to the entire memory array when Write Control ($\overline{WC}$) is driven high. Write operations are enabled when Write Control ($\overline{WC}$) is either driven low or left floating.

When Write Control ($\overline{WC}$) is driven high, device select and address bytes are acknowledged, Data bytes are not acknowledged.

2.5 V_{SS} (ground)

V_{SS} is the reference for the V_{CC} supply voltage.

2.6 Supply voltage (V_{CC})

2.6.1 Operating supply voltage (V_{CC})

Prior to selecting the memory and issuing instructions to it, a valid and stable V_{CC} voltage within the specified [V_{CC}(min), V_{CC}(max)] range must be applied (see Operating conditions in *Section 8: DC and AC parameters)*. In order to secure a stable DC supply voltage, it is recommended to decouple the V_{CC} line with a suitable capacitor (usually of the order of 10 nF to 100 nF) close to the V_{CC}/V_{SS} package pins.

This voltage must remain stable and valid until the end of the transmission of the instruction and, for a write instruction, until the completion of the internal write cycle (t_W).

2.6.2 Power-up conditions

The V_{CC} voltage has to rise continuously from 0 V up to the minimum V_{CC} operating voltage (see Operating conditions in *Section 8: DC and AC parameters)*.

2.6.3 Device reset

In order to prevent inadvertent write operations during power-up, a power-on-reset (POR) circuit is included.

At power-up, the device does not respond to any instruction until V_{CC} has reached the internal reset threshold voltage. This threshold is lower than the minimum V_{CC} operating voltage (see Operating conditions in *Section 8: DC and AC parameters*). When V_{CC} passes over the POR threshold, the device is reset and enters the Standby Power mode; however, the device must not be accessed until V_{CC} reaches a valid and stable DC voltage within the specified [V_{CC}(min), V_{CC}(max)] range (see Operating conditions in *Section 8: DC and AC parameters*).

In a similar way, during power-down (continuous decrease in V_{CC}), the device must not be accessed when V_{CC} drops below V_{CC}(min). When V_{CC} drops below the power-on-reset threshold voltage, the device stops responding to any instruction sent to it.

2.6.4 Power-down conditions

During power-down (continuous decrease in V_{CC}), the device must be in the Standby Power mode (mode reached after decoding a Stop condition, assuming that there is no internal write cycle in progress).

3 Memory organization

The memory is organized as shown below.

Figure 5. Block diagram

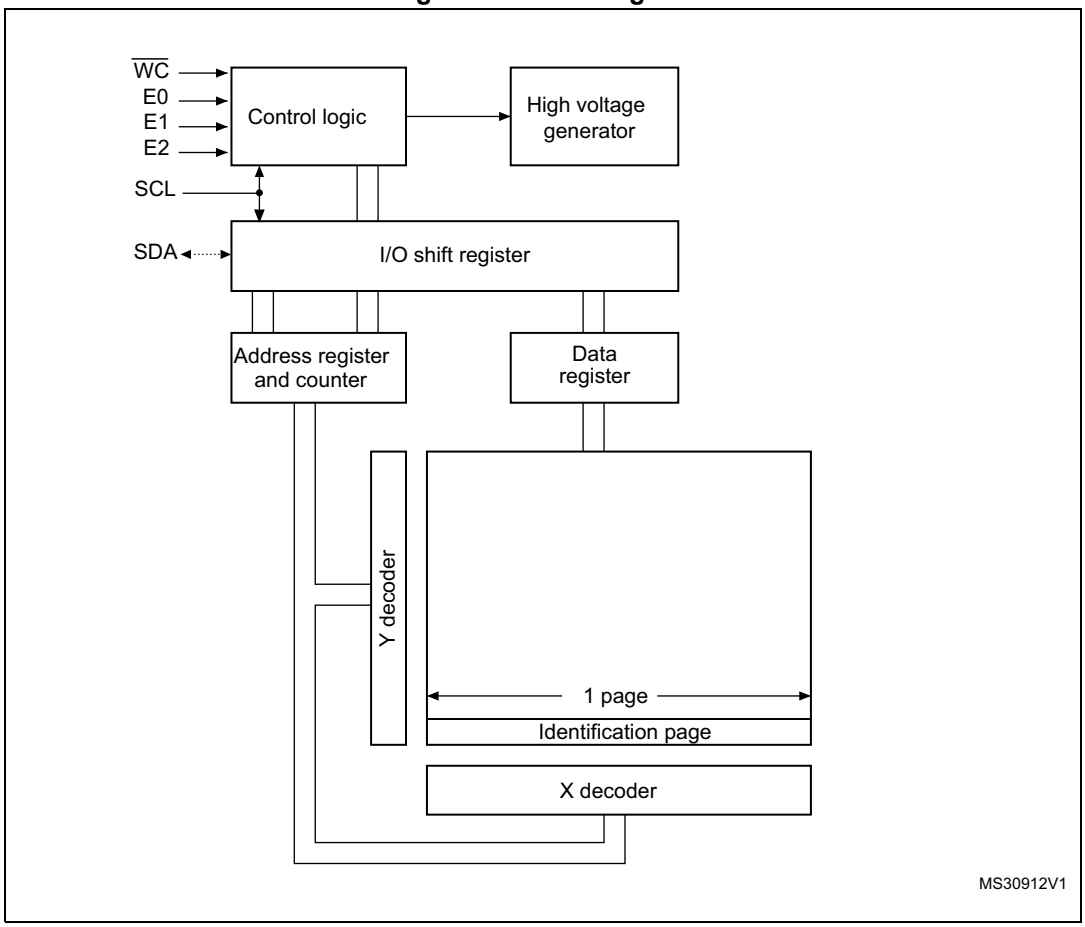

4 Device operation

The device supports the I^{2}C protocol. This is summarized in *Figure 6*. Any device that sends data on to the bus is defined to be a transmitter, and any device that reads the data to be a receiver. The device that controls the data transfer is known as the bus master, and the other as the slave device. A data transfer can only be initiated by the bus master, which will also provide the serial clock for synchronization. The device is always a slave in all communications.

Figure 6. I^{2}C bus protocol

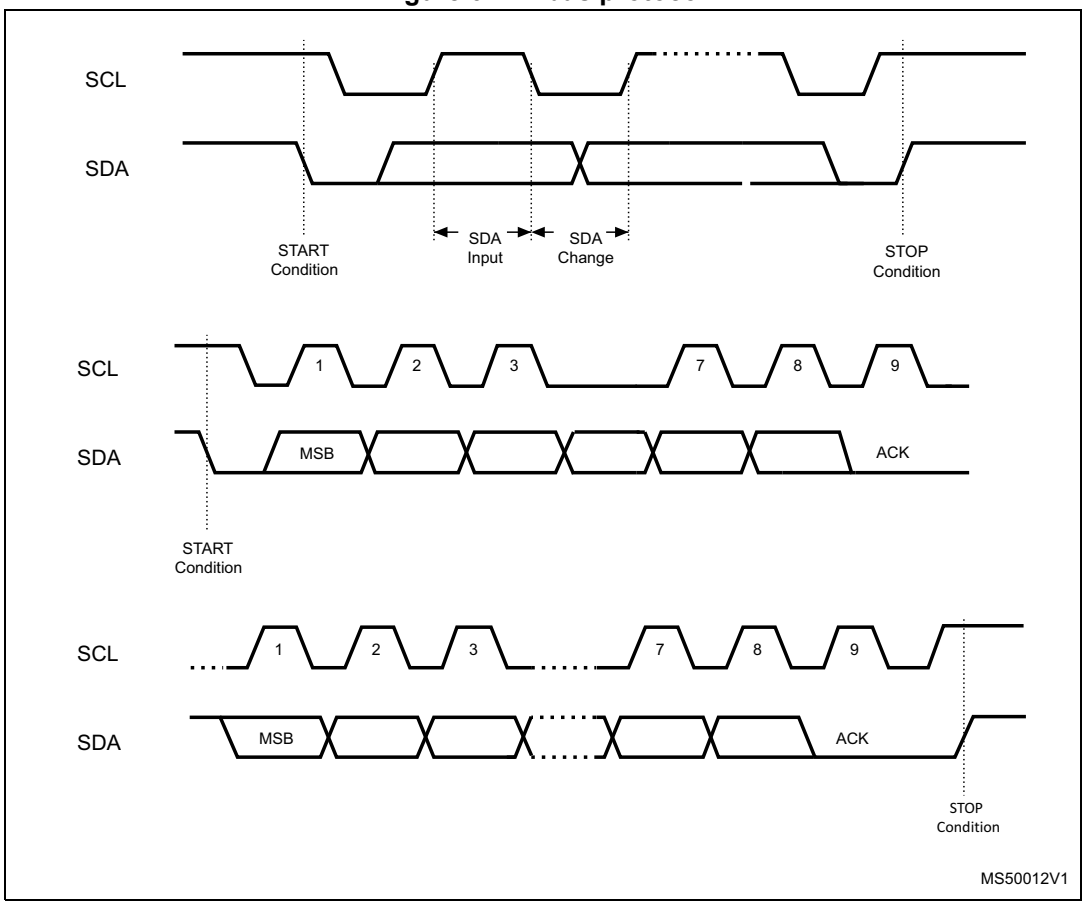

4.1 Start condition

Start is identified by a falling edge of Serial Data (SDA) while Serial Clock (SCL) is stable in the high state. A Start condition must precede any data transfer instruction. The device continuously monitors (except during a Write cycle) Serial Data (SDA) and Serial Clock (SCL) for a Start condition.

4.2 Stop condition

Stop is identified by a rising edge of Serial Data (SDA) while Serial Clock (SCL) is stable and driven high. A Stop condition terminates communication between the device and the bus master. A Read instruction that is followed by NoAck can be followed by a Stop condition to force the device into the Standby mode.

A Stop condition at the end of a Write instruction triggers the internal Write cycle.

4.3 Data input

During data input, the device samples Serial Data (SDA) on the rising edge of Serial Clock (SCL). For correct device operation, Serial Data (SDA) must be stable during the rising edge of Serial Clock (SCL), and the Serial Data (SDA) signal must change *only* when Serial Clock (SCL) is driven low.

4.4 Acknowledge bit (ACK)

The acknowledge bit is used to indicate a successful byte transfer. The bus transmitter, whether it be bus master or slave device, releases Serial Data (SDA) after sending eight bits of data. During the 9th clock pulse period, the receiver pulls Serial Data (SDA) low to acknowledge the receipt of the eight data bits.

4.5 Device addressing

To start communication between the bus master and the slave device, the bus master must initiate a Start condition. Following this, the bus master sends the device select code, shown in *Table 3* (most significant bit first).

Table 3. Device select code

	Device type identifier(1)				Chip Enable address(2)			$R\overline{W}$
	b7	b6	b5	b4	b3	b2	b1	b0
Device select code when addressing the memory array	1	0	1	0	E2	E1	E0	$R\overline{W}$
Device select code when accessing the Identification page	1	0	1	1	E2	E1	E0	$R\overline{W}$

1. The most significant bit, b7, is sent first.
2. E0, E1 and E2 are compared with the value read on input pins E0, E1 and E2.

When the device select code is received, the device only responds if the Chip Enable Address is the same as the value on the Chip Enable (E2, E1, E0) inputs.

The 8th bit is the Read/$\overline{\text{Write}}$ bit ($R\overline{W}$). This bit is set to 1 for Read and 0 for Write operations.

If a match occurs on the device select code, the corresponding device gives an acknowledgment on Serial Data (SDA) during the 9th bit time. If the device does not match the device select code, it deselects itself from the bus, and goes into Standby mode.

5 Instructions

5.1 Write operations

Following a Start condition the bus master sends a device select code with the R/$\overline{W}$ bit (R$\overline{W}$) reset to 0. The device acknowledges this, as shown in *Figure 7*, and waits for two address bytes. The device responds to each address byte with an acknowledge bit, and then waits for the data byte.

Table 4. Most significant address byte

A15	A14	A13	A12	A11	A10	A9	A8

Table 5. Least significant address byte

A7	A6	A5	A4	A3	A2	A1	A0

When the bus master generates a Stop condition immediately after a data byte Ack bit (in the “10th bit” time slot), either at the end of a Byte Write or a Page Write, the internal Write cycle t_W is triggered. A Stop condition at any other time slot does not trigger the internal Write cycle.

After the Stop condition and the successful completion of an internal Write cycle (t_W), the device internal address counter is automatically incremented to point to the next byte after the last modified byte.

During the internal Write cycle, Serial Data (SDA) is disabled internally, and the device does not respond to any requests.

If the Write Control input (WC) is driven High, the Write instruction is not executed and the accompanying data bytes are *not* acknowledged, as shown in *Figure 8*.

5.1.1 Byte Write

After the device select code and the address bytes, the bus master sends one data byte. If the addressed location is Write-protected, by Write Control ($\overline{WC}$) being driven high, the device replies with NoAck, and the location is not modified. If, instead, the addressed location is not Write-protected, the device replies with Ack. The bus master terminates the transfer by generating a Stop condition, as shown in *Figure 7*.

Figure 7. Write mode sequences with $\overline{WC}$ = 0 (data write enabled)

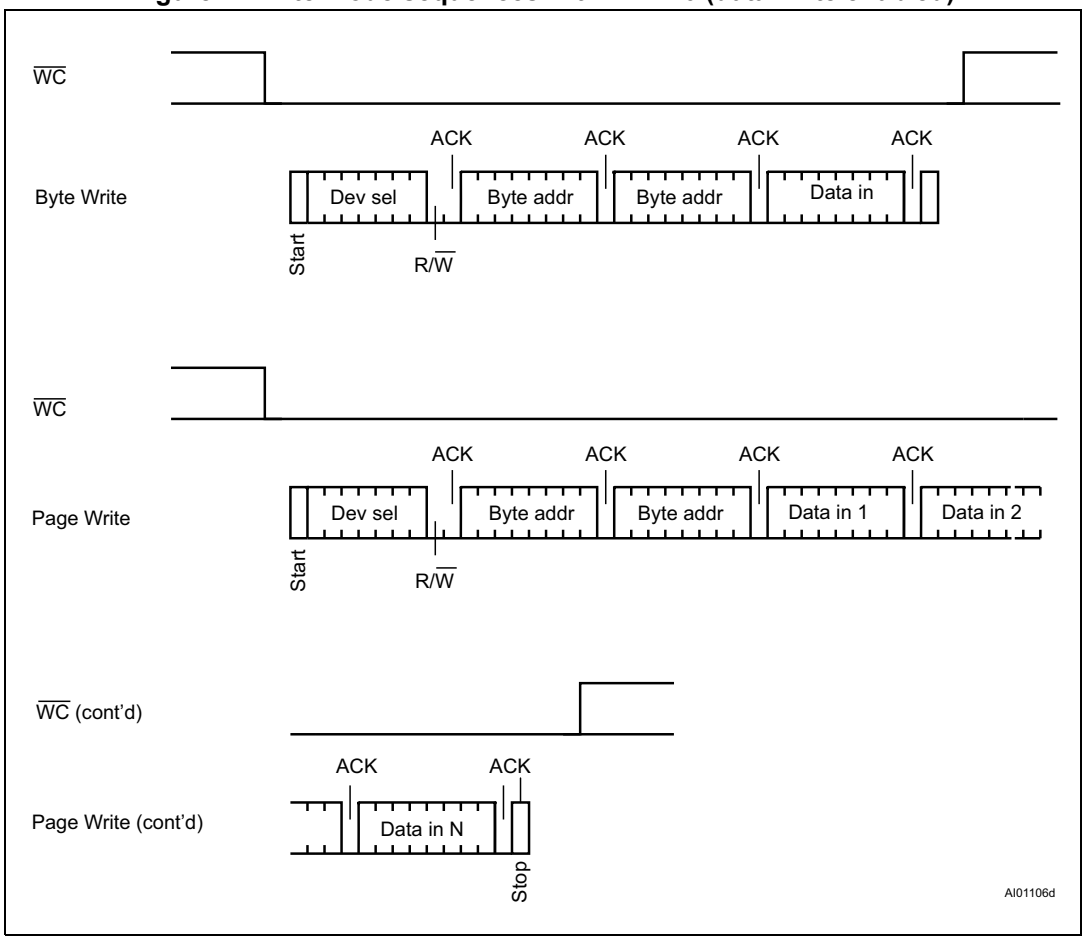

5.1.2 Page Write

The Page Write mode allows up to 64 byte to be written in a single Write cycle, provided that they are all located in the same page in the memory: that is, the most significant memory address bits, A15/A6, are the same. If more bytes are sent than will fit up to the end of the page, a “roll-over” occurs, i.e. the bytes exceeding the page end are written on the same page, from location 0.

The bus master sends from 1 to 64 byte of data, each of which is acknowledged by the device if Write Control ($\overline{WC}$) is low. If Write Control ($\overline{WC}$) is high, the contents of the addressed memory location are not modified, and each data byte is followed by a NoAck, as shown in *Figure 8*. After each transferred byte, the internal page address counter is incremented.

The transfer is terminated by the bus master generating a Stop condition.

Figure 8. Write mode sequences with $\overline{WC}$ = 1 (data write inhibited)

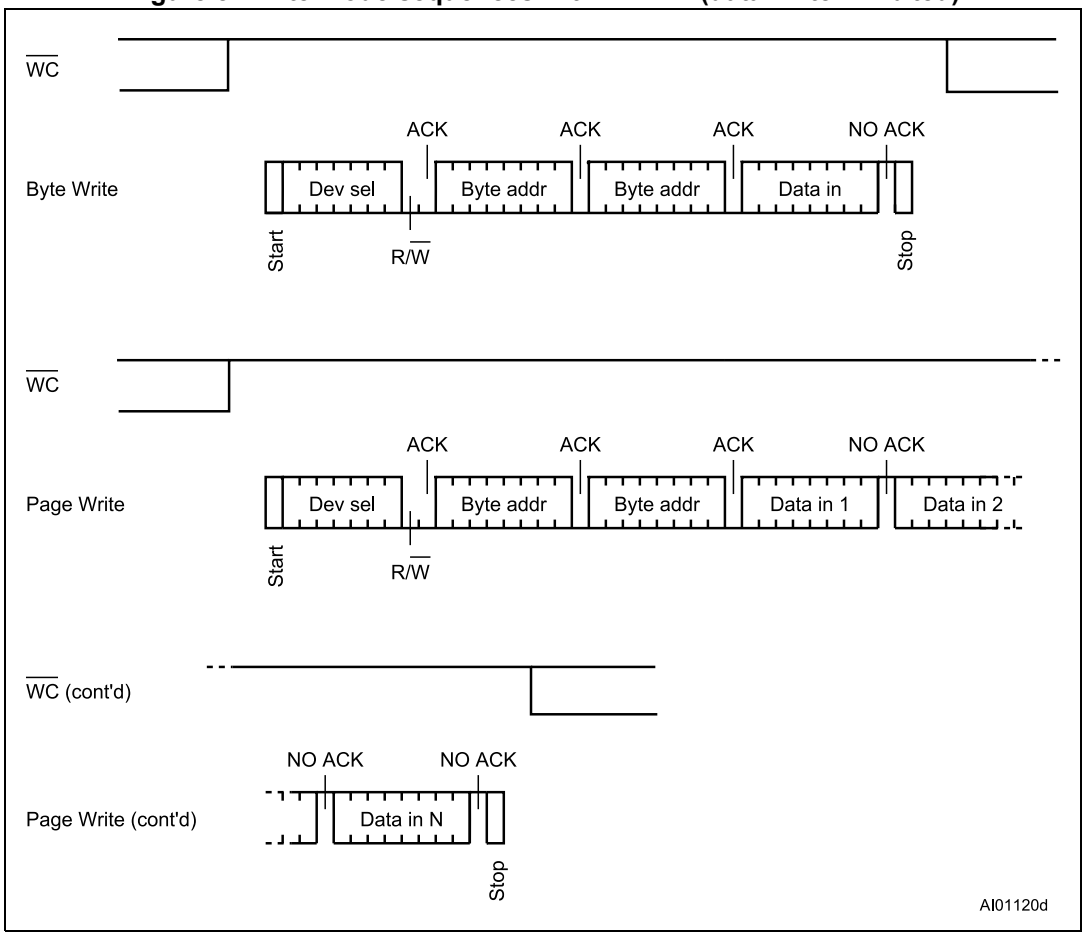

5.1.3 Write Identification Page (M24256-D only)

The Identification Page (64 byte) is an additional page which can be written and (later) permanently locked in Read-only mode. It is written by issuing the Write Identification Page instruction. This instruction uses the same protocol and format as Page Write (into memory array), except for the following differences:

- Device type identifier = 1011b
- MSB address bits A15/A6 are don't care except for address bit A10 which must be ‘0’. LSB address bits A5/A0 define the byte address inside the Identification page.

If the Identification page is locked, the data bytes transferred during the Write Identification Page instruction are not acknowledged (NoAck).

5.1.4 Lock Identification Page (M24256-D only)

The Lock Identification Page instruction (Lock ID) permanently locks the Identification page in Read-only mode. The Lock ID instruction is similar to Byte Write (into memory array) with the following specific conditions:

- Device type identifier = 1011b
- Address bit A10 must be ‘1’; all other address bits are don't care
- The data byte must be equal to the binary value xxxx xx1x, where x is don't care

5.1.5 ECC (Error Correction Code) and Write cycling

The Error Correction Code (ECC) is an internal logic function which is transparent for the I^2C communication protocol.

The ECC logic is implemented on each group of four EEPROM bytes[(a)]. Inside a group, if a single bit out of the four bytes happens to be erroneous during a Read operation, the ECC detects this bit and replaces it with the correct value. The read reliability is therefore much improved.

Even if the ECC function is performed on groups of four bytes, a single byte can be written/cycled independently. In this case, the ECC function also writes/cycles the three other bytes located in the same group[(a)]. As a consequence, the maximum cycling budget is defined at group level and the cycling can be distributed over the 4 bytes of the group: the sum of the cycles seen by byte0, byte1, byte2 and byte3 of the same group must remain below the maximum value defined *Table 11*.

a.A group of four bytes is located at addresses [4*N, 4*N+1, 4*N+2, 4*N+3], where N is an integer.

5.1.6 Minimizing Write delays by polling on ACK

The maximum Write time (t_w) is shown in AC characteristics tables in *Section 8: DC and AC parameters*, but the typical time is shorter. To make use of this, a polling sequence can be used by the bus master.

The sequence, as shown in *Figure 9*, is:

- Initial condition: a Write cycle is in progress.
- Step 1: the bus master issues a Start condition followed by a device select code (the first byte of the new instruction).
- Step 2: if the device is busy with the internal Write cycle, no Ack will be returned and the bus master goes back to Step 1. If the device has terminated the internal Write cycle, it responds with an Ack, indicating that the device is ready to receive the second part of the instruction (the first byte of this instruction having been sent during Step 1).

Figure 9. Write cycle polling flowchart using ACK

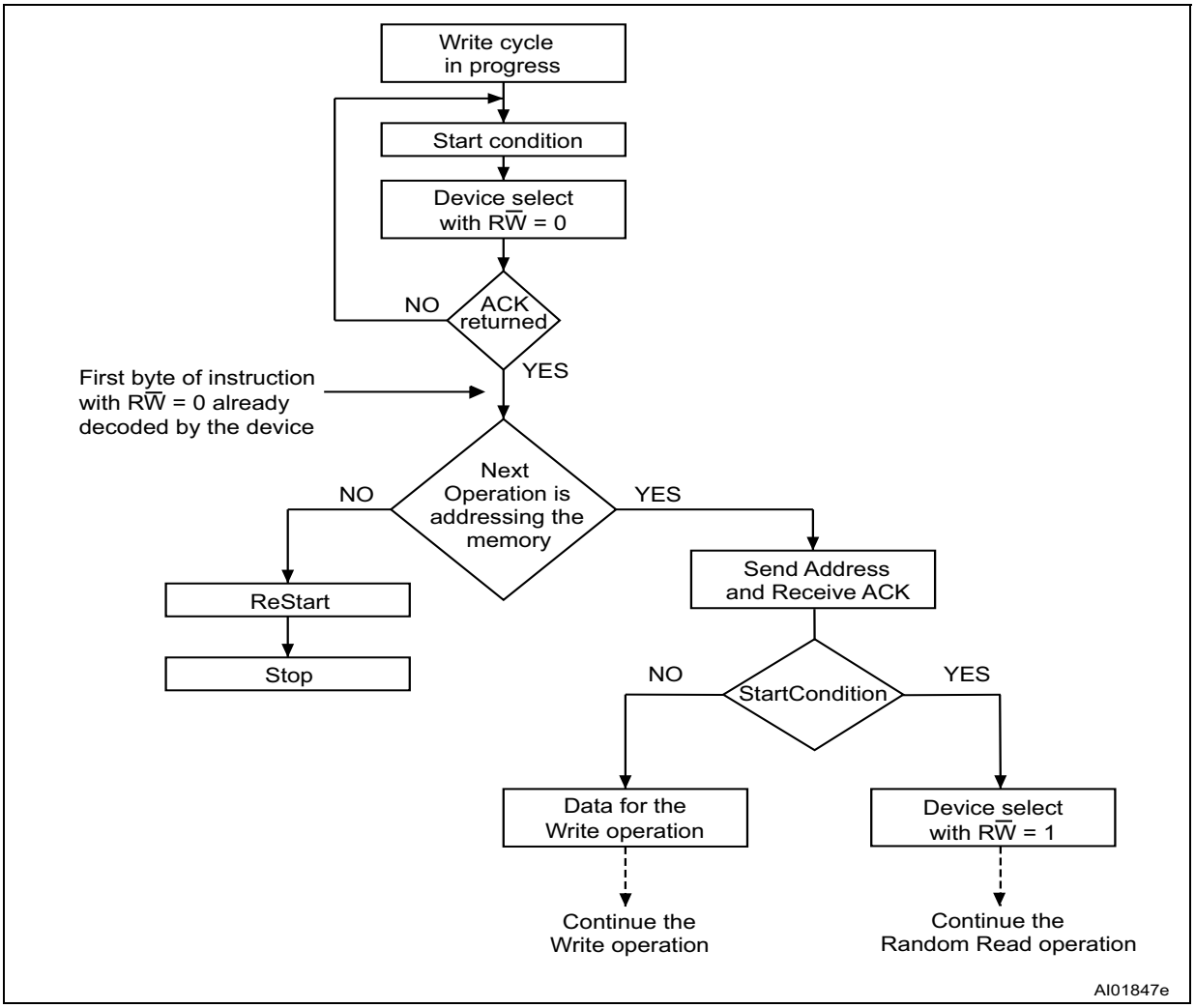

1. The seven most significant bits of the Device Select code of a Random Read (bottom right box in the figure) must be identical to the seven most significant bits of the Device Select code of the Write (polling instruction in the figure).

5.2 Read operations

Read operations are performed independently of the state of the Write Control ($\overline{WC}$) signal.

After the successful completion of a Read operation, the device internal address counter is incremented by one, to point to the next byte address.

For the Read instructions, after each byte read (data out), the device waits for an acknowledgment (data in) during the 9th bit time. If the bus master does not acknowledge during this 9th time, the device terminates the data transfer and switches to its Standby mode.

Figure 10. Read mode sequences

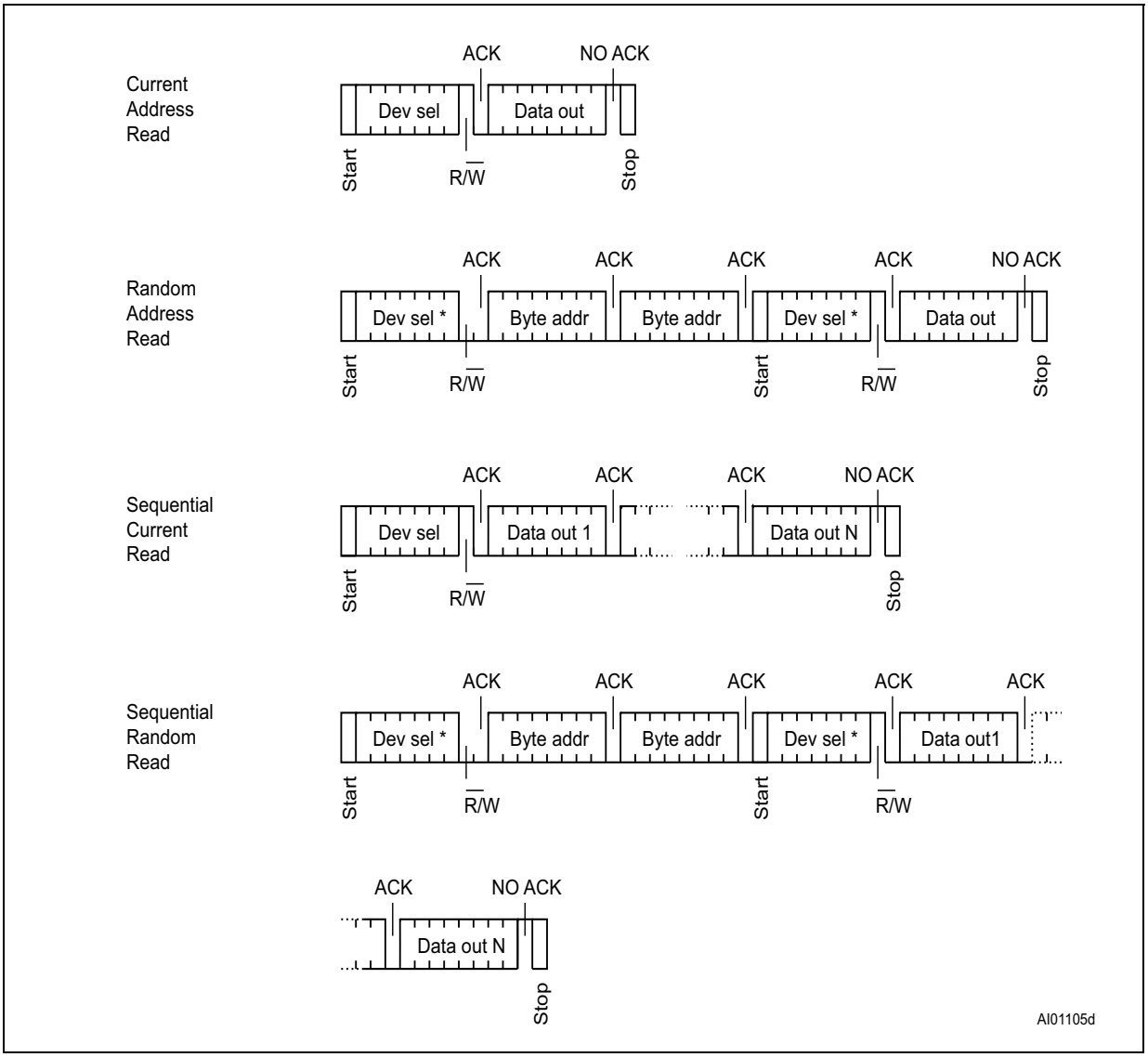

5.2.1 Random Address Read

A dummy Write is first performed to load the address into this address counter (as shown in *Figure 10*) but *without* sending a Stop condition. Then, the bus master sends another Start condition, and repeats the device select code, with the $\overline{RW}$ bit set to 1. The device acknowledges this, and outputs the contents of the addressed byte. The bus master must *not* acknowledge the byte, and terminates the transfer with a Stop condition.

5.2.2 Current Address Read

For the Current Address Read operation, following a Start condition, the bus master only sends a device select code with the R/$\overline{W}$ bit set to 1. The device acknowledges this, and outputs the byte addressed by the internal address counter. The counter is then incremented. The bus master terminates the transfer with a Stop condition, as shown in *Figure 10*, *without* acknowledging the byte.

Note that the address counter value is defined by instructions accessing either the memory or the Identification page. When accessing the Identification page, the address counter value is loaded with the byte location in the Identification page, therefore the next Current Address Read in the memory uses this new address counter value. When accessing the memory, it is safer to always use the Random Address Read instruction (this instruction loads the address counter with the byte location to read in the memory, see *Section 5.2.1*) instead of the Current Address Read instruction.

5.2.3 Sequential Read

This operation can be used after a Current Address Read or a Random Address Read. The bus master *does* acknowledge the data byte output, and sends additional clock pulses so that the device continues to output the next byte in sequence. To terminate the stream of bytes, the bus master must *not* acknowledge the last byte, and *must* generate a Stop condition, as shown in *Figure 10*.

The output data comes from consecutive addresses, with the internal address counter automatically incremented after each byte output. After the last memory address, the address counter “rolls-over”, and the device continues to output data from memory address 00h.

5.3 Read Identification Page (M24256-D only)

The Identification Page (64 bytes) is an additional page which can be written and (later) permanently locked in Read-only mode.

The Identification Page can be read by issuing an Read Identification Page instruction. This instruction uses the same protocol and format as the Random Address Read (from memory array) with device type identifier defined as 1011b. The MSB address bits A15/A6 are don't care, the LSB address bits A5/A0 define the byte address inside the Identification Page. The number of bytes to read in the ID page must not exceed the page boundary (e.g.: when reading the Identification Page from location 10d, the number of bytes should be less than or equal to 54, as the ID page boundary is 64 bytes).

5.4 Read the lock status (M24256-D only)

The locked/unlocked status of the Identification page can be checked by transmitting a specific truncated command [Identification Page Write instruction + one data byte] to the device. The device returns an acknowledge bit if the Identification page is unlocked, otherwise a NoAck bit if the Identification page is locked.

Right after this, it is recommended to transmit to the device a Start condition followed by a Stop condition, so that:

- Start: the truncated command is not executed because the Start condition resets the device internal logic,
- Stop: the device is then set back into Standby mode by the Stop condition.

6 Initial delivery state

The device is delivered with all the memory array bits and Identification page bits set to 1 (each byte contains FFh).

7 Maximum rating

Stressing the device outside the ratings listed in *Table 6* may cause permanent damage to the device. These are stress ratings only, and operation of the device at these, or any other conditions outside those indicated in the operating sections of this specification, is not implied. Exposure to absolute maximum rating conditions for extended periods may affect device reliability.

Table 6. Absolute maximum ratings

Symbol	Parameter	Min.	Max.	Unit
	Ambient operating temperature	-40	130	°C
T_{STG}	Storage temperature	–65	150	°C
T_{LEAD}	Lead temperature during soldering	see note (1)		°C
I_{OL}	DC output current (SDA = 0)	-	5	mA
V_{IO}	Input or output range	–0.50	6.5	V
V_{CC}	Supply voltage	–0.50	6.5	V
V_{ESD}	Electrostatic pulse (Human Body model)(2)	-	4000(3)	V

1. Compliant with JEDEC Std J-STD-020D (for small body, Sn-Pb or Pb-free assembly), the ST ECOPACK® 7191395 specification, and the European directive on Restrictions of Hazardous Substances (RoHS directive 2011/65/EU of July 2011).
2. Positive and negative pulses applied on different combinations of pin connections, according to AEC-Q100-002 (compliant with ANSI/ESDA/JEDEC JS-001-2012 standard, C1=100 pF, R1=1500 Ω).
3. 3000 V for previous devices (process letters KA).

8 DC and AC parameters

This section summarizes the operating and measurement conditions, and the DC and AC characteristics of the device.

Table 7. Operating conditions (voltage range W)

Symbol	Parameter	Min.	Max.	Unit
V_{CC}	Supply voltage	2.5	5.5	V
T_A	Ambient operating temperature	–40	85	°C
f_C	Operating clock frequency	-	1	MHz

Table 8. Operating conditions (voltage range R)

Symbol	Parameter	Min.	Max.	Unit
V_{CC}	Supply voltage	1.8	5.5	V
T_A	Ambient operating temperature	–40	85	°C
f_C	Operating clock frequency	-	1	MHz

Table 9. Operating conditions (voltage range F)

Symbol	Parameter	Min.	Max.	Unit
V_{CC}	Supply voltage	1.7	5.5	V
T_A	Ambient operating temperature	–40	85	°C
f_C	Operating clock frequency	-	1	MHz

Table 10. AC measurement conditions

Symbol	Parameter	Min.	Max.	Unit
C_{bus}	Load capacitance	-	100	pF
-	SCL input rise/fall time, SDA input fall time	-	50	ns
-	Input levels	0.2 V_{CC} to 0.8 V_{CC}		V
-	Input and output timing reference levels	0.3 V_{CC} to 0.7 V_{CC}		V

Figure 11. AC measurement I/O waveform

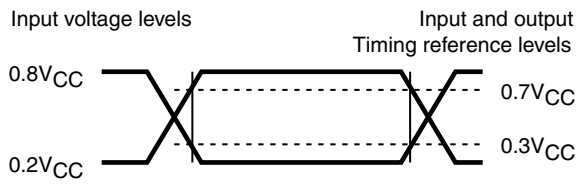

Table 11. Input parameters

Symbol	Parameter(1)	Test condition	Min.	Max.	Unit
C_{IN}	Input capacitance (SDA)	-	-	8	pF
C_{IN}	Input capacitance (other pins)	-	-	6	pF
Z_L	Input impedance (E2, E1, E0, $\overline{WC}$)(2)	$V_{IN} < 0.3\ V_{CC}$	30	-	kΩ
Z_H		$V_{IN} > 0.7\ V_{CC}$	500	-	kΩ

1. Characterized only, not tested in production.
2. E2, E1, E0 input impedance when the memory is selected (after a Start condition).

Table 12. Cycling performance by groups of four bytes

Symbol	Parameter	Test condition(1)	Max.	Unit
Ncycle	Write cycle endurance(2)	$T_A \leq 25$ °C, $V_{CC}(min) < V_{CC} < V_{CC}(max)$	4,000,000	Write cycle(3)
		$T_A = 85$ °C, $V_{CC}(min) < V_{CC} < V_{CC}(max)$	1,200,000	

1. Cycling performance for products identified by process letter K, previous devices were specified as 1 Million write cycle at 25°C.
2. The Write cycle endurance is defined for groups of four data bytes located at addresses [4*N, 4*N+1, 4*N+2, 4*N+3] where N is an integer. The Write cycle endurance is defined by characterization and qualification.
3. A Write cycle is executed when either a Page Write, a Byte Write, a Write Identification Page or a Lock Identification Page instruction is decoded. When using the Byte Write, the Page Write or the Write Identification Page, refer also to *Section 5.1.5: ECC (Error Correction Code) and Write cycling*.

Table 13. Memory cell data retention

Parameter	Test condition	Min.	Unit
Data retention(1)	$T_A = 55$ °C	200	Year

1. For products identified by process letter K. The data retention behavior is checked in production, while the 200-year limit is defined from characterization and qualification results.

Table 14. DC characteristics (M24256-BW, device grade 6)

Symbol	Parameter	Test conditions (in addition to those in *Table 7*)	Min.	Max.	Unit
I_{LI}	Input leakage current (SCL, SDA, E2, E1, E0)	$V_{IN} = V_{SS}$ or V_{CC}, device in Standby mode	-	± 2	µA
I_{LO}	Output leakage current	SDA in Hi-Z, external voltage applied on SDA: V_{SS} or V_{CC}	-	± 2	µA
I_{CC}	Supply current (Read)	V_{CC} = 2.5 V, f_c = 400 kHz (rise/fall time < 50 ns)	-	1	mA
		V_{CC} = 5.5 V, f_c = 400 kHz (rise/fall time < 50 ns)	-	2	
		2.5 V ≤V_{CC} ≤ 5.5 V, f_c = 1 MHz(1) (rise/fall time < 50 ns)	-	2.5	
I_{CC0}	Supply current (Write)	During t_W, 2.5 V ≤ V_{CC} ≤ 5.5 V	-	2(2)	mA
I_{CC1}	Standby supply current	Device not selected(3), $V_{IN} = V_{SS}$ or V_{CC}, V_{CC} = 2.5 V	-	2	µA
		Device not selected(3), $V_{IN} = V_{SS}$ or V_{CC}, V_{CC} = 5.5 V	-	3	µA
V_{IL}	Input low voltage (SCL, SDA, $\overline{WC}$, E2, E1, E0)(4)	-	–0.45	0.3 V_{CC}	V
V_{IH}	Input high voltage (SCL, SDA)	-	0.7 V_{CC}	6.5	V
	Input high voltage ($\overline{WC}$, E2, E1, E0)(5)	-	0.7 V_{CC}	V_{CC}+0.6	V
V_{OL}	Output low voltage	I_{OL} = 2.1 mA, V_{CC} = 2.5 V or I_{OL} = 3 mA, V_{CC} = 5.5 V	-	0.4	V

1. Only for devices operating at f_C max = 1 MHz (see *Table 18*).
2. Characterized value, not tested in production.
3. The device is not selected after power-up, after a Read instruction (after the Stop condition), or after the completion of the internal write cycle t_W (t_W is triggered by the correct decoding of a Write instruction).
4. E_i inputs should be tied to V_{ss} (see *Section 2.3*).
5. E_i inputs should be tied to V_{cc} (see *Section 2.3*).

Table 15. DC characteristics (M24256-BR, M24256-DR device grade 6)

Symbol	Parameter	Test conditions[1] (in addition to those in *Table 8*)	Min.	Max.	Unit
I_{LI}	Input leakage current (E1, E2, SCL, SDA)	$V_{IN} = V_{SS}$ or V_{CC}, device in Standby mode	-	± 2	µA
I_{LO}	Output leakage current	SDA in Hi-Z, external voltage applied on SDA: V_{SS} or V_{CC}	-	± 2	µA
I_{CC}	Supply current (Read)	V_{CC} = 1.8 V, f_c= 400 kHz	-	0.8	mA
		f_c= 1 MHz[2]	-	2.5	mA
I_{CC0}	Supply current (Write)	During t_W V_{CC} = 1.8 V ≤ V_{CC} ≤ 2.5 V	-	2[3]	mA
I_{CC1}	Standby supply current	Device not selected[4], $V_{IN} = V_{SS}$ or V_{CC}, V_{CC} = 1.8 V	-	1	µA
V_{IL}	Input low voltage (SCL, SDA, $\overline{WC}$, E2, E1,E0)[5]	1.8 V ≤ V_{CC} < 2.5 V	–0.45	0.25 V_{CC}	V
V_{IH}	Input high voltage (SCL, SDA)	1.8 V ≤ V_{CC} < 2.5 V	0.75 V_{CC}	6.5	V
	Input high voltage ($\overline{WC}$, E2, E1, E0)[6]	1.8 V ≤ V_{CC} < 2.5 V	0.75 V_{CC}	V_{CC}+ 0.6	V
V_{OL}	Output low voltage	I_{OL} = 1 mA, V_{CC} = 1.8 V	-	0.2	V

1. If the application uses the voltage range R device with 2.5 V < V_{cc} < 5.5 V and -40 °C < T_A < +85 °C, please refer to *Table 14* instead of this table.
2. Only for devices identified with process letter K
3. Characterized value, not tested in production.
4. The device is not selected after power-up, after a Read instruction (after the Stop condition), or after the completion of the internal write cycle t_W (t_W is triggered by the correct decoding of a Write instruction).
5. E_i inputs should be tied to V_{ss} (see *Section 2.3*).
6. E_i inputs should be tied to V_{cc} (see *Section 2.3*).

Table 16. DC characteristics (M24256-BF, M24256-DF, device grade 6)

Symbol	Parameter	Test conditions[1] (in addition to those in *Table 9*)	Min.	Max.	Unit
I_{LI}	Input leakage current (E1, E2, SCL, SDA)	$V_{IN} = V_{SS}$ or V_{CC} device in Standby mode	-	± 2	µA
I_{LO}	Output leakage current	SDA in Hi-Z, external voltage applied on SDA: V_{SS} or V_{CC}	-	± 2	µA
I_{CC}	Supply current (Read)	V_{CC} = 1.7 V, f_C = 400 kHz	-	0.8	mA
		f_C = 1 MHz[2]	-	2.5	
I_{CC0}	Supply current (Write)	During t_W 1.7 V < V_{CC} < 2.5 V	-	2[3]	mA
I_{CC1}	Standby supply current	Device not selected[4], $V_{IN} = V_{SS}$ or V_{CC}, V_{CC} = 1.7 V	-	1	µA
V_{IL}	Input low voltage (SCL, SDA, $\overline{WC}$, E_i)[5]	1.7 V ≤ V_{CC} < 2.5 V	–0.45	0.25 V_{CC}	V
V_{IH}	Input high voltage (SCL, SDA)	1.7 V ≤ V_{CC} < 2.5 V	0.75 V_{CC}	6.5	V
	Input high voltage ($\overline{WC}$, E2, E1, E0)[6]	1.7 V ≤ V_{CC} < 2.5 V	0.75 V_{CC}	V_{CC}+ 0.6	
V_{OL}	Output low voltage	I_{OL} = 1 mA, V_{CC} = 1.7 V	-	0.2	V

1. If the application uses the voltage range F device with 2.5 V < V_{CC} < 5.5 V and -40 °C < T_A < +85 °C, please refer to *Table 14* instead of this table.
2. Only for devices identified by process letter K (see *Table 18*).
3. Characterized value, not tested in production.
4. The device is not selected after power-up, after a Read instruction (after the Stop condition), or after the completion of the internal write cycle t_W (t_W is triggered by the correct decoding of a Write instruction).
5. E_i inputs should be tied to V_{SS}(see *Section 2.3*).
6. E_i inputs should be tied to V_{CC} (see *Section 2.3*).

Table 17. 400 kHz AC characteristics

Symbol	Alt.	Parameter	Min.	Max.	Unit
f_C	f_{SCL}	Clock frequency	-	400	kHz
t_{CHCL}	t_{HIGH}	Clock pulse width high	600	-	ns
t_{CLCH}	t_{LOW}	Clock pulse width low	1300	-	ns
t_{QL1QL2}(1)	t_F	SDA (out) fall time	20(2)	300	ns
t_{XH1XH2}	t_R	Input signal rise time	(3)	(3)	ns
t_{XL1XL2}	t_F	Input signal fall time	(3)	(3)	ns
t_{DXCH}	$t_{SU:DAT}$	Data in set up time	100	-	ns
t_{CLDX}	$t_{HD:DAT}$	Data in hold time	0	-	ns
t_{CLQX}(4)	t_{DH}	Data out hold time	100	-	ns
t_{CLQV}(5)	t_{AA}	Clock low to next data valid (access time)	-	900	ns
t_{CHDL}	$t_{SU:STA}$	Start condition setup time	600	-	ns
t_{DLCL}	$t_{HD:STA}$	Start condition hold time	600	-	ns
t_{CHDH}	$t_{SU:STO}$	Stop condition set up time	600	-	ns
t_{DHDL}	t_{BUF}	Time between Stop condition and next Start condition	1300	-	ns
t_{WLDL}(6)(1)	$t_{SU:WC}$	$\overline{WC}$ set up time (before the Start condition)	0	-	µs
t_{DHWH}(7)(1)	$t_{HD:WC}$	$\overline{WC}$ hold time (after the Stop condition)	1	-	µs
t_W	t_{WR}	Internal Write cycle duration	-	5	ms
t_{NS}(1)	-	Pulse width ignored (input filter on SCL and SDA) - single glitch	-	80	ns

1. Characterized only, not tested in production.
2. With C_L = 10 pF.
3. There is no min. or max. values for the input signal rise and fall times. It is however recommended by the I²C specification that the input signal rise and fall times be more than 20 ns and less than 300 ns when f_C < 400 kHz.
4. To avoid spurious Start and Stop conditions, a minimum delay is placed between SCL=1 and the falling or rising edge of SDA.
5. t_{CLQV} is the time (from the falling edge of SCL) required by the SDA bus line to reach either $0.3V_{CC}$ or $0.7V_{CC}$, assuming that $R_{bus} \times C_{bus}$ time constant is within the values specified in *Figure 12.*
6. $\overline{WC}$=0 set up time condition to enable the execution of a WRITE command.
7. $\overline{WC}$=0 hold time condition to enable the execution of a WRITE command.

Table 18. 1 MHz AC characteristics

Symbol	Alt.	Parameter[1]	Min.	Max.	Unit
f_C	f_{SCL}	Clock frequency	0	1	MHz
t_{CHCL}	t_{HIGH}	Clock pulse width high	260	-	ns
t_{CLCH}	t_{LOW}	Clock pulse width low	500	-	ns
t_{XH1XH2}	t_R	Input signal rise time	(2)	(2)	ns
t_{XL1XL2}	t_F	Input signal fall time	(2)	(2)	ns
t_{QL1QL2}[3]	t_F	SDA (out) fall time	20[4]	120	ns
t_{DXCH}	$t_{SU:DAT}$	Data in setup time	50	-	ns
t_{CLDX}	$t_{HD:DAT}$	Data in hold time	0	-	ns
t_{CLQX}[5]	t_{DH}	Data out hold time	100	-	ns
t_{CLQV}[6]	t_{AA}	Clock low to next data valid (access time)	-	450[7]	ns
t_{CHDL}	$t_{SU:STA}$	Start condition setup time	250	-	ns
t_{DLCL}	$t_{HD:STA}$	Start condition hold time	250	-	ns
t_{CHDH}	$t_{SU:STO}$	Stop condition setup time	250	-	ns
t_{DHDL}	t_{BUF}	Time between Stop condition and next Start condition	500	-	ns
t_{WLDL}[8][3]	$t_{SU:WC}$	$\overline{WC}$ set up time (before the Start condition)	0	-	µs
t_{DHWH}[9][3]	$t_{HD:WC}$	$\overline{WC}$ hold time (after the Stop condition)	1	-	µs
t_W	t_{WR}	Write time	-	5	ms
t_{NS}[3]	-	Pulse width ignored (input filter on SCL and SDA)	-	50	ns

1. Only for devices identified by the process letter K (devices qualified at 1 MHz).
2. There is no min. or max. values for the input signal rise and fall times. It is however recommended by the I²C specification that the input signal rise and fall times be less than 120 ns when f_C < 1 MHz.
3. Characterized only, not tested in production.
4. With C_L = 10 pF.
5. To avoid spurious Start and Stop conditions, a minimum delay is placed between SCL=1 and the falling or rising edge of SDA.
6. t_{CLQV} is the time (from the falling edge of SCL) required by the SDA bus line to reach either 0.3 V_{CC} or 0.7 V_{CC}, assuming that the Rbus × Cbus time constant is within the values specified in *Figure 13*.
7. 500 ns for the previous products.
8. $\overline{WC}$=0 set up time condition to enable the execution of a WRITE command.
9. $\overline{WC}$=0 hold time condition to enable the execution of a WRITE command.

Figure 12. Maximum R_{bus} value versus bus parasitic capacitance (C_{bus}) for an I2C bus at maximum frequency f_C = 400 kHz

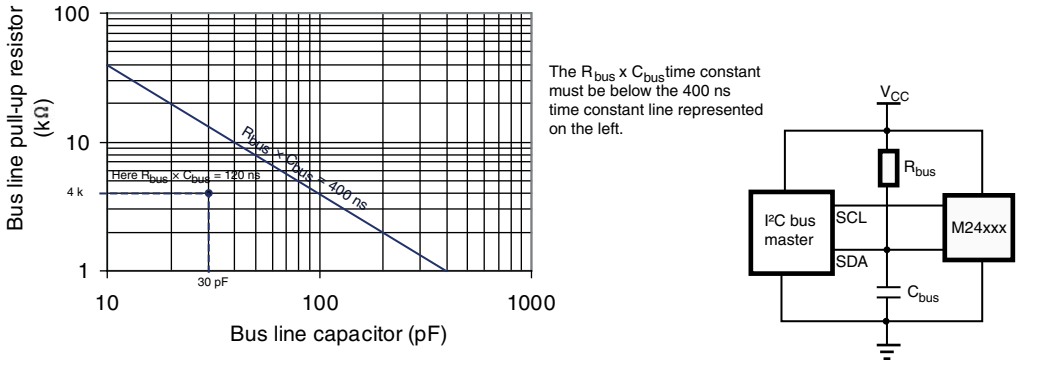

Figure 13. Maximum R_{bus} value versus bus parasitic capacitance C_{bus}) for an I2C bus at maximum frequency f_C = 1MHz

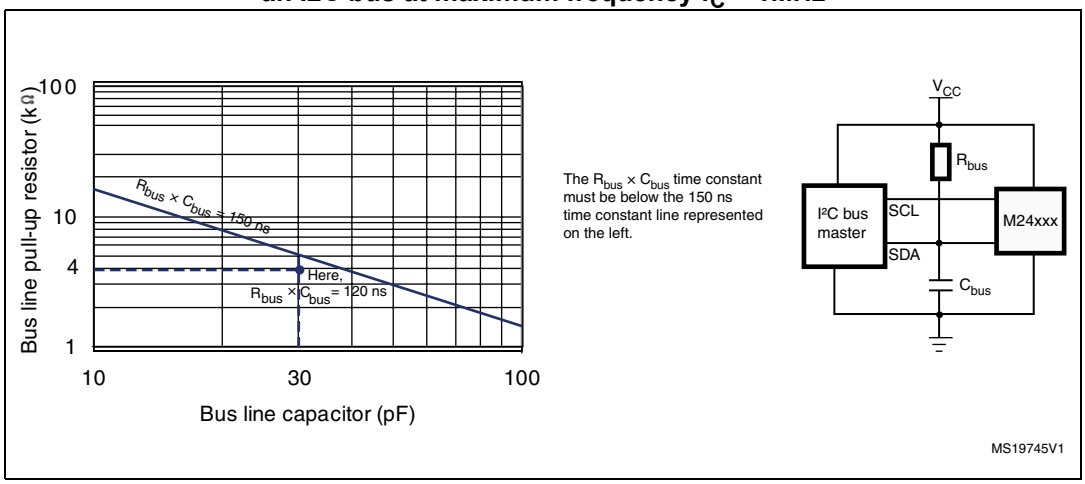

Figure 14. AC waveforms

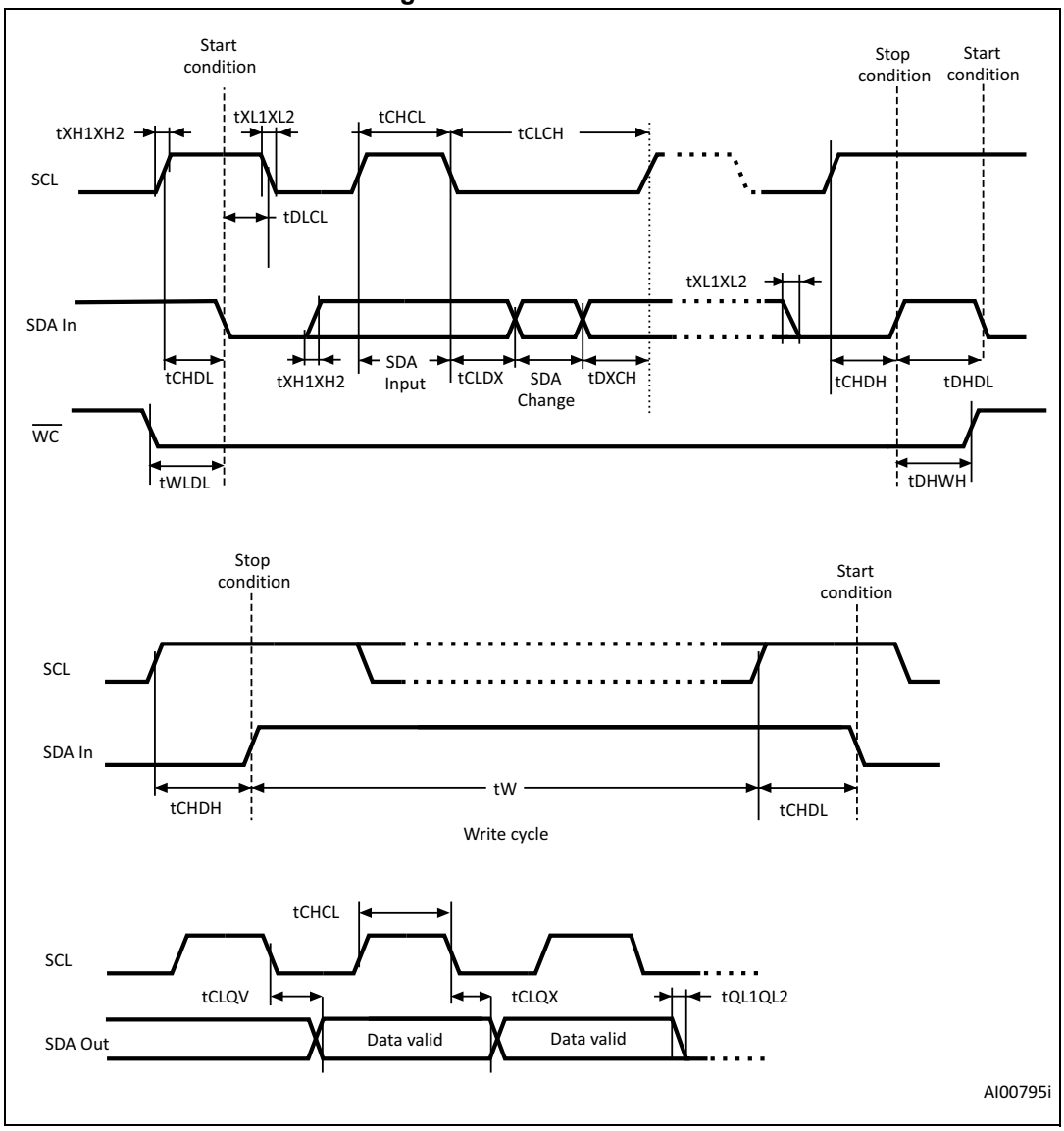

9 Package information

In order to meet environmental requirements, ST offers these devices in different grades of ECOPACK® packages, depending on their level of environmental compliance. ECOPACK® specifications, grade definitions and product status are available at: *www.st.com*. ECOPACK® is an ST trademark.

9.1 UFDFPN8 (DFN8) package information

Figure 15. UFDFPN8 – 2x3 mm, 0.55 thickness, ultra thin fine pitch dual flat package, no lead - package outline

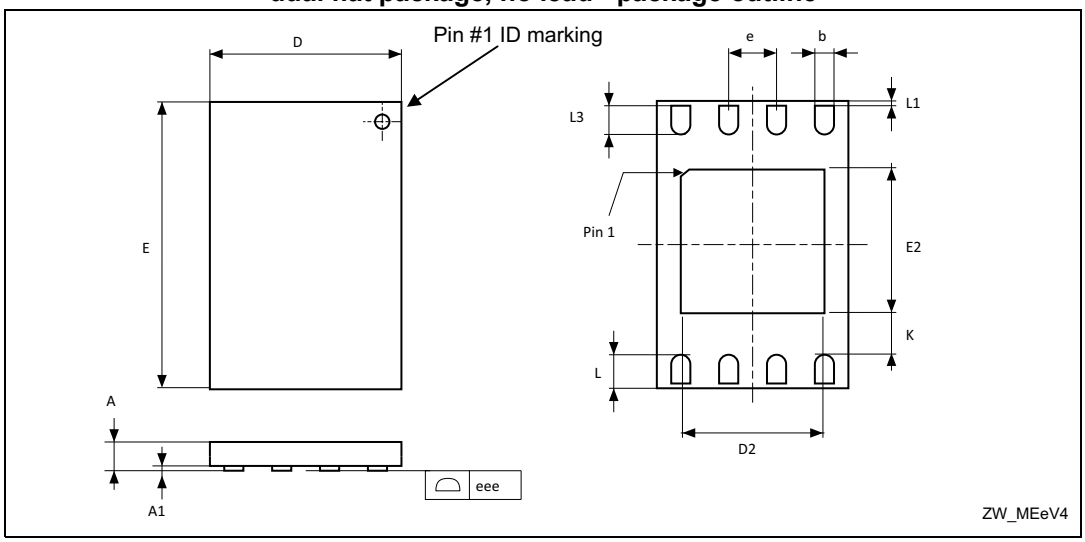

1. Drawing is not to scale.
2. The central pad (the area E2 by D2 in the above illustration) must be either connected to V_{SS} or left floating (not connected) in the end application.

Table 19. UFDFPN8 – 2x3 mm, 0.55 thickness, ultra thin fine pitch dual flat package, no lead - package mechanical data

Symbol	millimeters			inches(1)		
	Min	Typ	Max	Min	Typ	Max
A	0.450	0.550	0.600	0.0177	0.0217	0.0236
A1	0.000	0.020	0.050	0.0000	0.0008	0.0020
b	0.200	0.250	0.300	0.0079	0.0098	0.0118
D	1.900	2.000	2.100	0.0748	0.0787	0.0827
D2	1.200	-	1.600	0.0472	-	0.0630
E	2.900	3.000	3.100	0.1142	0.1181	0.1220
E2	1.200	-	1.600	0.0472	-	0.0630
e	-	0.500	-	-	0.0197	-
K	0.300	-	-	0.0118	-	-

Table 19. UFDFPN8 – 2x3 mm, 0.55 thickness, ultra thin fine pitch dual flat package, no lead - package mechanical data (continued)

Symbol	millimeters			inches(1)		
	Min	Typ	Max	Min	Typ	Max
L	0.300	-	0.500	0.0118	-	0.0197
L1	-	-	0.150	-	-	0.0059
L3	0.300	-	-	0.0118	-	-
eee(2)	0.080	-	-	0.0031	-	-

1. Values in inches are converted from mm and rounded to four decimal digits.
2. Applied for exposed die paddle and terminals. Exclude embedding part of exposed die paddle from measuring.

9.2 TSSOP8 package information

Figure 16.TSSOP8 – 3x4.4 mm, 0.65 mm pitch, 8-lead thin shrink small outline, package outline

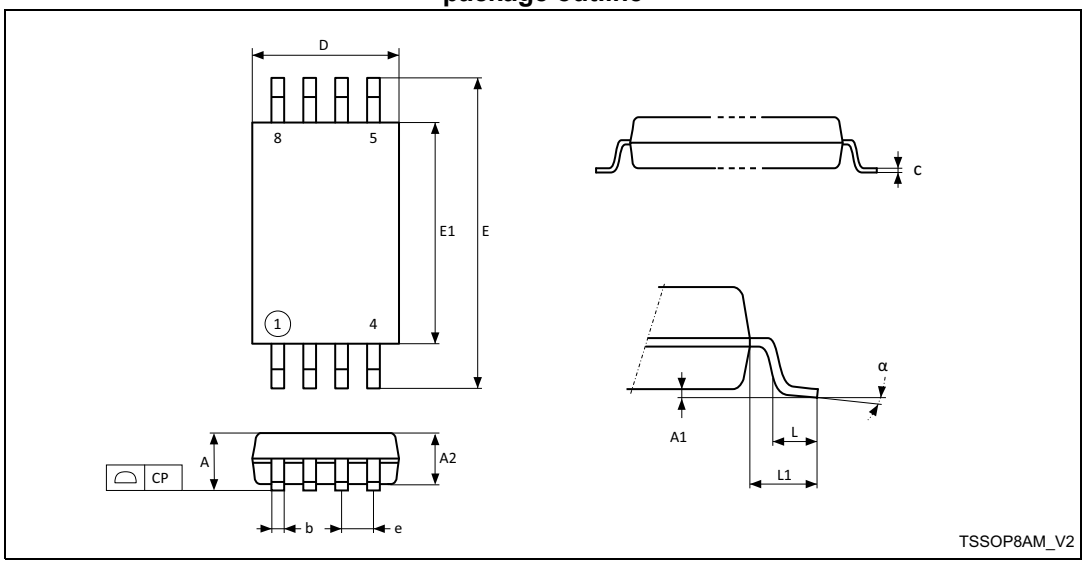

1. Drawing is not to scale.

Table 20. TSSOP8 – 3 x 4.4 mm, 0.65 mm pitch, 8-lead thin shrink small outline, package mechanical data

Symbol	millimeters			inches(1)		
	Min.	Typ.	Max.	Min.	Typ.	Max.
A	-	-	1.200	-	-	0.0472
A1	0.050	-	0.150	0.0020	-	0.0059
A2	0.800	1.000	1.050	0.0315	0.0394	0.0413
b	0.190	-	0.300	0.0075	-	0.0118
c	0.090	-	0.200	0.0035	-	0.0079

Table 20. TSSOP8 – 3 x 4.4 mm, 0.65 mm pitch, 8-lead thin shrink small outline, package mechanical data (continued)

Symbol	millimeters			inches[1]		
	Min.	Typ.	Max.	Min.	Typ.	Max.
CP	-	-	0.100	-	-	0.0039
D	2.900	3.000	3.100	0.1142	0.1181	0.1220
e	-	0.650	-	-	0.0256	-
E	6.200	6.400	6.600	0.2441	0.2520	0.2598
E1	4.300	4.400	4.500	0.1693	0.1732	0.1772
L	0.450	0.600	0.750	0.0177	0.0236	0.0295
L1	-	1.000	-	-	0.0394	-
α	0°	-	8°	0°	-	8°

1. Values in inches are converted from mm and rounded to four decimal digits.

9.3 SO8N package information

Figure 17. SO8N – 3.9x4.9 mm, 8-lead plastic small outline, 150 mils body width, package outline

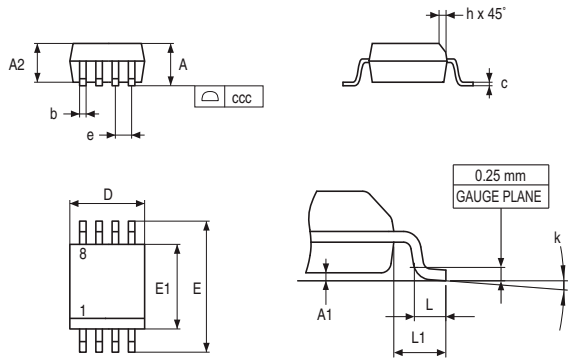

1. Drawing is not to scale.

Table 21. SO8N – 3.9x4.9 mm, 8-lead plastic small outline, 150 mils body width, package mechanical data

Symbol	millimeters			inches(1)		
	Min.	Typ.	Max.	Min.	Typ.	Max.
A	-	-	1.750	-	-	0.0689
A1	0.100	-	0.250	0.0039	-	0.0098
A2	1.250	-	-	0.0492	-	-
b	0.280	-	0.480	0.0110	-	0.0189
c	0.170	-	0.230	0.0067	-	0.0091
D	4.800	4.900	5.000	0.1890	0.1929	0.1969
E	5.800	6.000	6.200	0.2283	0.2362	0.2441
E1	3.800	3.900	4.000	0.1496	0.1535	0.1575
e	-	1.270	-	-	0.0500	-
h	0.250	-	0.500	0.0098	-	0.0197
k	0°	-	8°	0°	-	8°
L	0.400	-	1.270	0.0157	-	0.0500
L1	-	1.040	-	-	0.0409	-
ccc	-	-	0.100	-	-	0.0039

1. Values in inches are converted from mm and rounded to four decimal digits.

Figure 18. SO8N – 3.9x4.9 mm, 8-lead plastic small outline, 150 mils body width, package recommended footprint

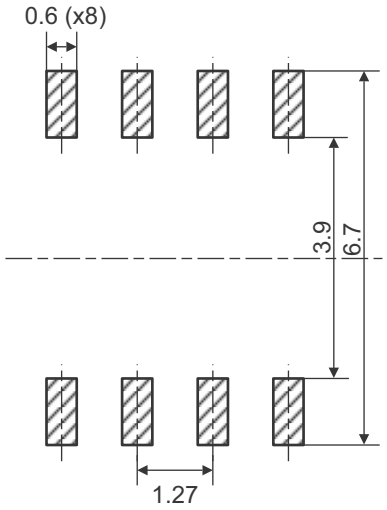

1. Dimensions are expressed in millimeters.

9.4 WLCSP8 (CS) package information

Figure 19. WLCSP (CS) - 8-bump, 1.289 x 1.376 mm, 0.4 mm pitch wafer level chip scale package outline

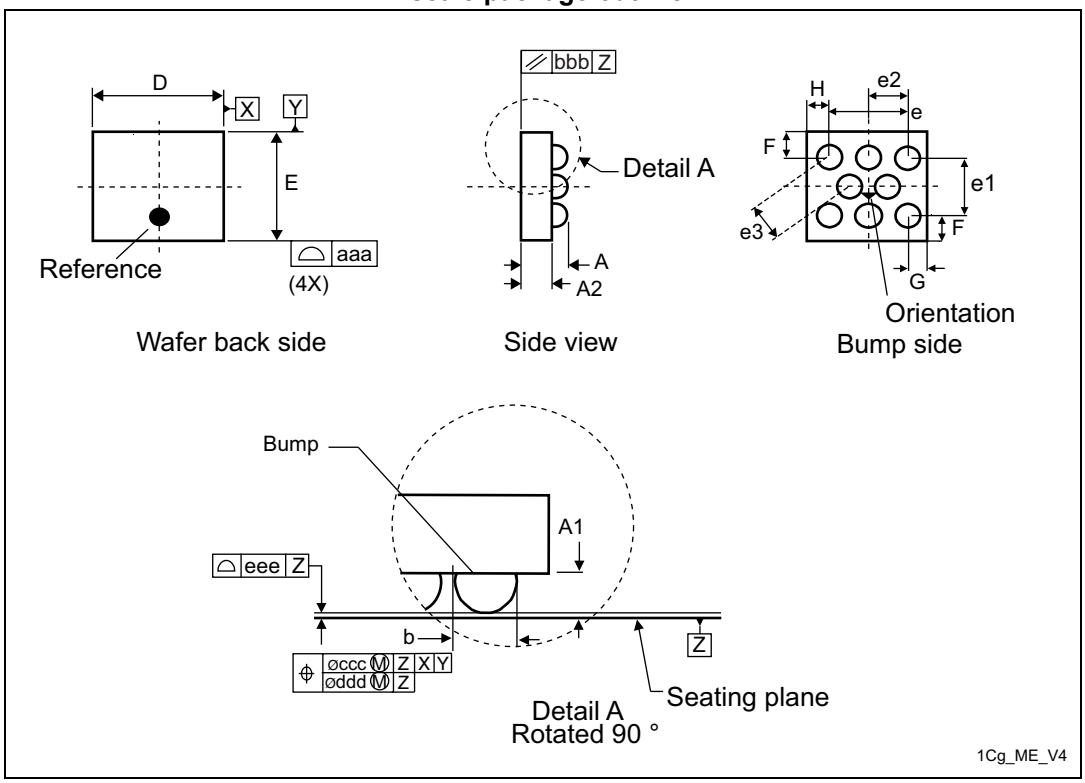

1. Drawing is not to scale.

Table 22. WLCSP (CS)- 8-bump, 1.289 x 1.376 mm, 0.4 mm pitch wafer level chip scale package mechanical data

Symbol	millimeters			inches(1)		
	Min	Typ	Max	Min	Typ	Max
A	0.500	0.540	0.580	0.0197	0.0213	0.0228
A1	-	0.190	-	-	0.0075	-
A2	-	0.350	-	-	0.0138	-
b(2)	-	0.270	-	-	0.0106	-
D	-	1.289	1.309	-	0.0507	0.0515
E	-	1.376	1.396	-	0.0542	0.0550
e	-	0.800	-	-	0.0315	-
e1	-	0.693	-	-	0.0273	-
e2	-	0.400	-	-	0.0157	-
e3	-	0.400	-	-	0.0157	-
F	-	0.342	-	-	0.0135	-

Table 22. WLCSP (CS)- 8-bump, 1.289 x 1.376 mm, 0.4 mm pitch wafer level chip scale package mechanical data (continued)

Symbol	millimeters			inches[1]		
	Min	Typ	Max	Min	Typ	Max
G	-	0.245	-	-	0.0096	-
H	-	0.245	-	-	0.0096	-
aaa	-	0.110	-	-	0.0043	-
bbb	-	0.110	-	-	0.0043	-
ccc	-	0.110	-	-	0.0043	-
ddd	-	0.060	-	-	0.0024	-
eee	-	0.060	-	-	0.0024	-

1. Values in inches are converted from mm and rounded to 4 decimal digits.
2. Dimension is measured at the maximum bump diameter parallel to primary datum Z.

Figure 20. WLCSP (CS) - 8-bump, 1.289 x 1.376 mm, 0.4 mm pitch wafer level chip scale package recommended footprint

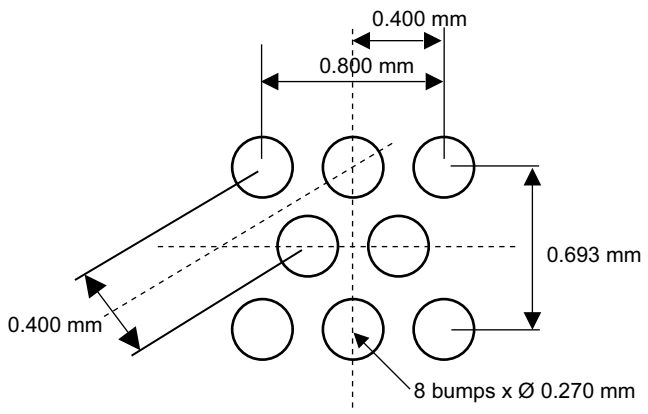

1. Dimensions are expressed in millimeters.

9.5 WLCSP8 (CU) package information

Figure 21. WLCSP (CU)- 8 balls, 1.289x1.1.309 mm, 0.4 mm pitch, with BSC, wafer level chip scale package outline

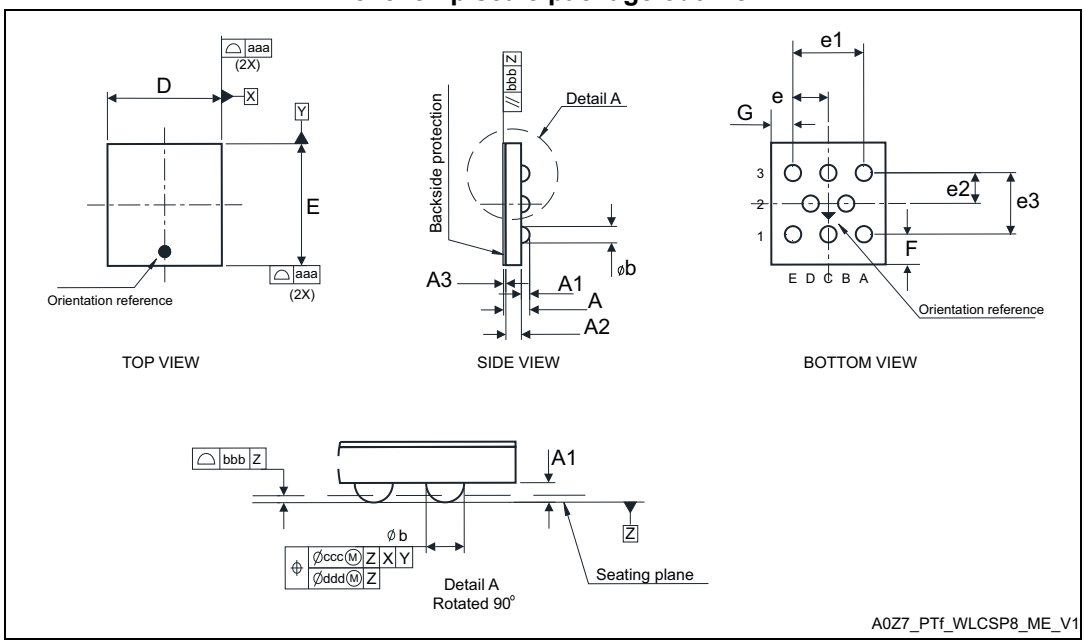

1. Drawing is not to scale.
2. Dimension is measured at the maximum bump diameter parallel to primary datum Z.
3. Primary datum Z and seating plane are defined by the spherical crowns of the bump.
4. Bump position designation per JESD 95-1, SPP-010.

Table 23. WLCSP (CU)- 8 balls, 1.289x1.1.309 mm, 0.4 mm pitch, with BSC, wafer level chip scale mechanical data

Symbol	millimeters			inches(1)		
	Min	Typ	Max	Min	Typ	Max
A	0.255	0.295	0.335	0.0100	0.0116	0.0132
A1	-	0.095	-	-	0.0037	-
A2	-	0.175	-	-	0.0069	-
A3	-	0.025	-	-	0.0010	-
b	-	0.185	-	-	0.0073	-
D	-	1.289	1.309	-	0.0507	0.0515
E	-	1.376	1.396	-	0.0542	0.0550
e	-	0.400	-	-	0.0157	-
e1	-	0.800	-	-	0.0315	-
e2	-	0.346	-	-	0.0136	-
e3	-	0.693	-	-	0.0273	-
F	-	0.342	-	-	0.0135	-

Table 23. WLCSP (CU)- 8 balls, 1.289x1.1.309 mm, 0.4 mm pitch, with BSC, wafer level chip scale mechanical data (continued)

Symbol	millimeters			inches[1]		
	Min	Typ	Max	Min	Typ	Max
G	-	0.245	-	-	0.0096	-
aaa	-	0.110	-	-	0.0043	-
bbb	-	0.110	-	-	0.0043	-
ccc	-	0.110	-	-	0.0043	-
ddd	-	0.060	-	-	0.0024	-
eee	-	0.060	-	-	0.0024	-

1. Values in inches are converted from mm and rounded to the 4rd decimal place.

Figure 22. WLCSP (CU)- 8 balls, 1.289x1.1.309 mm, 0.4 mm pitch, with BSC, wafer level chip scale recommended footprint

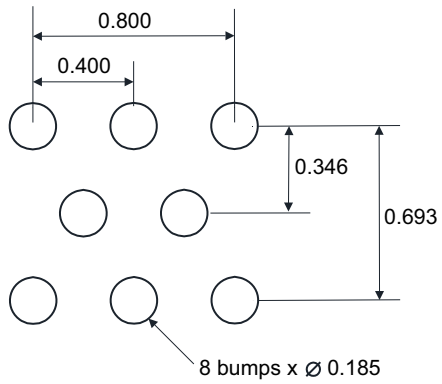

1. Dimensions are expressed in millimeters.

10 Ordering information

Table 24. Ordering information scheme

Example: M24256-D W MN 6 T P /K

Device type

M24 = I^2C serial access EEPROM

Device function

256 = 256 Kbit (32 K x 8 bit)

Device family

B = Without Identification page

D = With additional Identification page

Operating voltage

W = V_{CC} = 2.5 V to 5.5 V

R = V_{CC} = 1.8 V to 5.5 V

F = V_{CC} = 1.7 V to 5.5 V

Package(1)

MN = SO8 (150 mil width)

DW = TSSOP8 (169 mil width)

MC = UFDFPN8 (DFN8)

CS = WLCSP

CU = WLCSP Ultra-Thin

Device grade

6 = Industrial: device tested with standard test flow over -40 to 85 °C

Option

T = Tape and reel packing

blank = tube packing

Plating technology

P or G = ECOPACK2®

Process(2)

/K = Manufacturing technology code

1. RoHS-compliant and halogen-free (ECOPACK2®)
2. The process letters apply to WLCSP device only. These process letters appear on the device package (marking) and on the shipment box. Please contact your nearest ST Sales Office for further information.

Table 25. Ordering information scheme (unsawn wafer)(1)

Example: M24256 - B F K W 20 I / 90

Device type

M24 = I^2C serial access EEPROM

Device function

256 = 256Kbit (32 K x 8 bit)

Device family

B = Without Identification page

Operating voltage

F = V_{CC} = 1.7 V to 5.5 V

Process

K = F8H

Delivery form

W = Unsawn wafer

Wafer thickness

20 = Non-backlapped wafer

Wafer testing

I = Inkless test

Device grade

90 = -40°C to 85°C

1. For all information concerning the M24256 delivered in unsawn wafer, please contact your nearest ST Sales Office.

Engineering samples

Parts marked as ES or E are not yet qualified and therefore not approved for use in production. ST is not responsible for any consequences deriving from such use. In no event, will ST be liable for the customer using of these engineering samples in production. ST's quality department must be contacted prior to any decision to use these engineering samples to run qualification activity.

11 Revision history

Table 26. Document revision history

Date	Revision	Changes
22-Jun-2012	26	Datasheet revision 25 split into: – M24256-125 datasheet for automotive products (range 3), – M24256-BW M24256-BR M24256-BF M24256-DR M24256-DF (this datasheet) for standard products (range 6). Added: – Reference M24256-DF – *Table 1: Signal names*, *Table 12: Memory cell data retention* Updated: – *Table 17: 400 kHz AC characteristics* and *Table 18: 1 MHz AC characteristics*: added set up and hold timing conditiions on $\overline{WC}$ (t_{WLDL} and t_{DHWH}) – *Figure 18: M24256-DFCS6TP/K, WLCSP 8-bump wafer-level chip scale package outline* and *Table 21: M24256-DFCS6TP/K, WLCSP 8-bump wafer-level chip scale package mechanical data* – Cycling and data retention limits Deleted: – UFDFPN8, package revision MB
01-Aug-2012	27	Updated *Figure 3: WLCSP connections* and *Figure 18: M24256-DFCS6TP/K, WLCSP 8-bump wafer-level chip scale package outline*.
18-Sep-2012	28	Changed title of *Figure 3: WLCSP connections*. Updated *Section 5.2.2: Current Address Read*.
20-Nov-2012	29	Corrected “Device family” data in *Table 24: Ordering information scheme*.
17-Dec-2012	30	Deleted note (3) under *Table 3: Device select code*. Modified I_{CCO} condition in *Table 15: DC characteristics (M24256-BR, M24256-DR device grade 6)*. Deleted incorrect table (*Table 15. DC characteristics (M24256-R, device grade 6)*). Updated package list in *Table 24: Ordering information scheme*.
21-Feb-2014	31	Updated *Figure 3: WLCSP connections*. Added notes *4.* and *5.* in *Table 14* and notes *5.* and *6.* in *Table 15* and *Table 16*
17-Jun-2014	32	Updated – *Figure 3*, – note 1 on *Table 12* – In *Table 24* note 1 on Package and blank reference on Option.

Table 26. Document revision history (continued)

Date	Revision	Changes
01-Jun-2015	33	Added: – Unsawn wafer reference on cover page and *Table 25: Ordering information scheme (unsawn wafer)* – *Figure 20: WLCSP (CS) - 8-bump, 1.289 x 1.376 mm, 0.4 mm pitch wafer level chip scale package recommended footprint* – reference to *Engineering samples* Updated: – *Section 2.6.2*, *Section 4.5* – Note 2 on *Table 6* – *Table 18* – Note 2 on *Figure 15* – *Table 21* – Note 2 on *Table 24* Removed: – Note on t_{NS} max value on *Table 18*
14-Mar-2018	34	Added WLCSP (CU) package in cover page and in *Section 9: Package information*, *Table 2: Signals vs. bump position*. Updated *Table 10: AC measurement conditions*, *Table 22: WLCSP (CS)-8-bump, 1.289 x 1.376 mm, 0.4 mm pitch wafer level chip scale package mechanical data*, *Table 24: Ordering information scheme*

IMPORTANT NOTICE – PLEASE READ CAREFULLY

STMicroelectronics NV and its subsidiaries (“ST”) reserve the right to make changes, corrections, enhancements, modifications, and improvements to ST products and/or to this document at any time without notice. Purchasers should obtain the latest relevant information on ST products before placing orders. ST products are sold pursuant to ST’s terms and conditions of sale in place at the time of order acknowledgement.

Purchasers are solely responsible for the choice, selection, and use of ST products and ST assumes no liability for application assistance or the design of Purchasers’ products.

No license, express or implied, to any intellectual property right is granted by ST herein.

Resale of ST products with provisions different from the information set forth herein shall void any warranty granted by ST for such product.

ST and the ST logo are trademarks of ST. All other product or service names are the property of their respective owners.

Information in this document supersedes and replaces information previously supplied in any prior versions of this document.

© 2018 STMicroelectronics – All rights reserved