MATERIAL NUMBER	ENG NO.	DESCRIPTION	INSULATOR KEYING POSITION	HORSEPOWER RATING
1122190029	ARC30FHA01	ARC 30A FH 125VAC 1P+N+G	7	1 HP
1122190030	ARC30FHB02	ARC 30A FH 250VAC 2P+G		3 HP
1122190031	ARC30FHB03	ARC 30A FH 250VAC 3P+G		5 HP
1122190032	ARC30FHAB04	ARC 30A FH 125/250VAC 2P+N+G		NA
1122190033	ARC30FHC02	ARC 30A FH 208VAC 2P+G	16	NA
1122190034	ARC30FHC03	ARC 30A FH 208VAC 3P+G		5 HP
1122190035	ARC30FHAC05	ARC 30A FH 120/208VAC 3P+N+G		NA
1122190036	ARC30FHD01	ARC 30A FH 277VAC 1P+N+G	4	NA
1122190037	ARC30FHE02	ARC 30A FH 480VAC 2P+G		NA
1122190038	ARC30FHE03	ARC 30A FH 480VAC 3P+G		10 HP
1122190039	ARC30FHDE05	ARC 30A FH 277/480VAC 3P+N+G		NA
1122190040	ARC30FHF02	ARC 30A FH 600VAC 2P+G	14	NA
1122190041	ARC30FHF03	ARC 30A FH 600VAC 3P+G		NA
1122190042	ARC30FHGF05	ARC 30A FH 347/600VAC 3P+N+G		NA

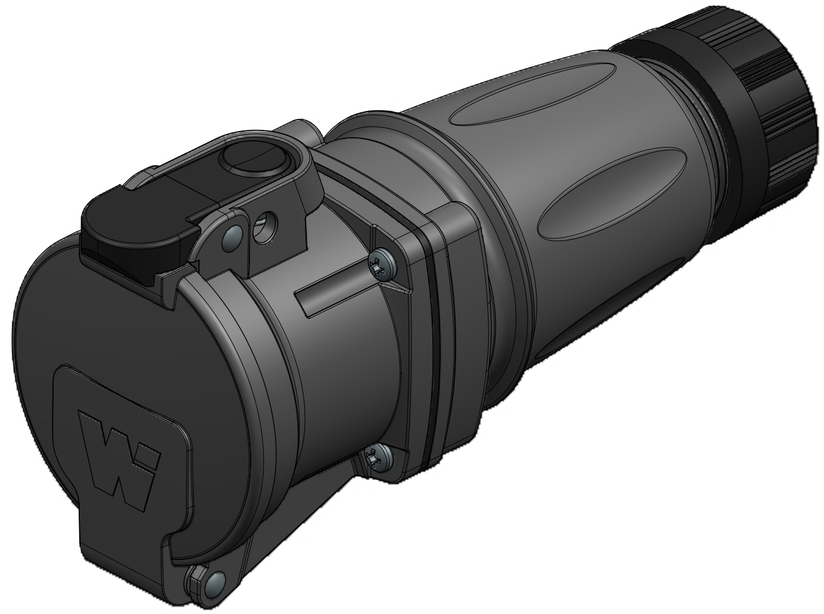

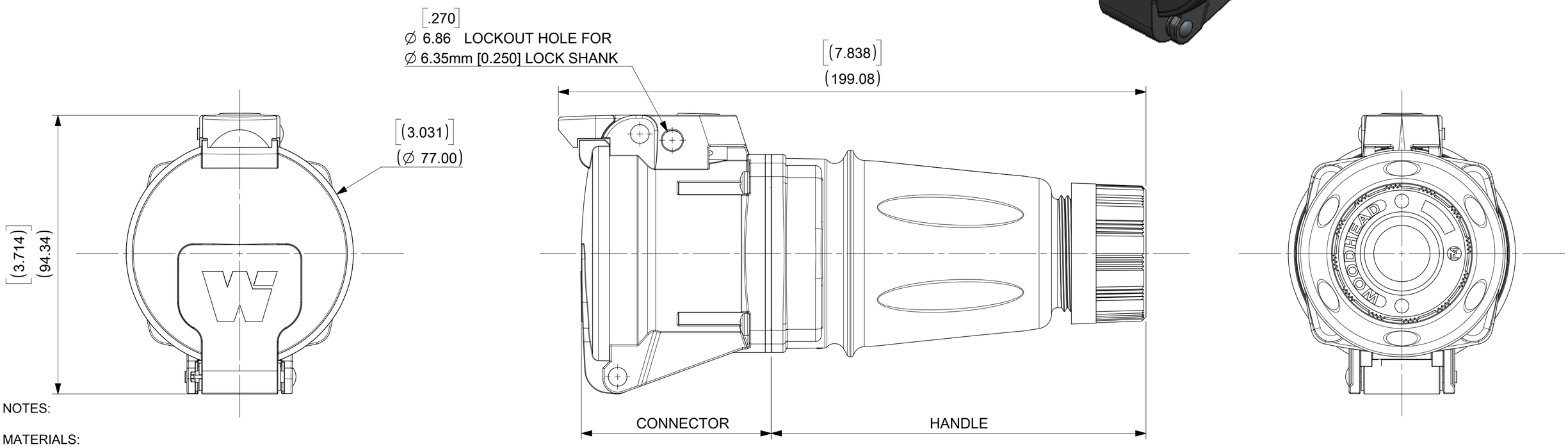

NOTES:

MATERIALS:
- HOUSINGS AND INSULATORS: GLASS FILLED PBT
- CONTACTS: COPPER ALLOY WITH A SILVER NICKEL TIP, SILVER PLATED
- MOUNTING AND INTERFACE GASKETS: SILICONE
- GROMMET - RUBBER
- FRICTION RING - NATURAL POLYETHYLENE
- COMPRESSION NUT - BLACK PBT
- SELF TAPPING SCREWS - STAINLESS STEEL

RATINGS:
- CURRENT: 30 AMPS
- VOLTAGE AND HORSEPOWER: SEE TABLE
- OPERATING TEMPERATURE: -25°C (-13°F) TO 60°C (140°F)
- ENVIRONMENTAL: TYPE 4X, IP69K
- WIRING CAPACITY: 12AWG MIN. TO 8 AWG MAX.
- TORQUE TERMINAL SCREWS TO 1.7 N-M (15 in/lbs)
- AGENCY: UL LISTING PENDING
  - SWITCH RATED RECEPTACLE/CONNECTOR
  - BRANCH CIRCUIT DISCONNECT SWITCH
  - MOTOR CIRCUIT DISCONNECT SWITCH IF HP RATED

CONNECTOR AND HANDLE ARE PACKAGED AS SUB-ASSEMBLIES AND WILL REQUIRE END USER ASSEMBLY.

THIS DRAWING REPLACES SD-112219-003.

ARC30FHE03 SHOWN

GROMMET P/N	GROMMET COLOR	CABLE DIAMETER RANGE
1301800411	GRAY	12.7mm - 15.9mm (.500" - .625")
1301800283	ORANGE	15.9mm - 19.0mm (.625" - .750")
1301800413	BLACK	19.0mm - 22.2mm (.750" - .875")

DOCUMENT STATUS	P1	RELEASE DATE	2018/11/05 17:31:27

SYMBOLS: EA = 0; EC = 0; EP = 0; S = 0; ▼ = 0; C = 0; ☒ = 0; ■ = 0; V = 0

THIS DRAWING CONTAINS INFORMATION THAT IS PROPRIETARY TO MOLEX ELECTRONIC TECHNOLOGIES, LLC AND SHOULD NOT BE USED WITHOUT WRITTEN PERMISSION

DIMENSION UNITS: INCH — SCALE: 1:1

GENERAL TOLERANCES (UNLESS SPECIFIED)

	MM	INCH
4 PLACES	±	±
3 PLACES	±	±
2 PLACES	±	±
1 PLACE	±	±
0 PLACES	±	±
ANGULAR TOL	± °	

DRAFT WHERE APPLICABLE MUST REMAIN WITHIN DIMENSIONS

CURRENT REV DESC: ADDED 10HP,NEW NOTES

EC NO: 604773
DRWN: MJANTELEZIO 2018/09/20
CHK'D: JFMURPHY 2018/11/05
APPR: JFMURPHY 2018/11/05

INITIAL REVISION:
DRWN: DRWN BY XXXX/XX/XX
APPR: APPR BY XXXX/XX/XX

THIRD ANGLE PROJECTION | DRAWING: C-SIZE | SERIES: 112219

molex

ARC 30A FH 480VAC 3P+G

PRODUCT CUSTOMER DRAWING

DOCUMENT NUMBER	DOC TYPE	DOC PART	REVISION
1122190038	PSD	000	B2

MATERIAL NUMBER	CUSTOMER	SHEET NUMBER
	GENERAL MARKET	1 OF 2

FORMAT: Eng-lega-master-tb-prod-C
REVISION: D
DATE: 2018/01/18

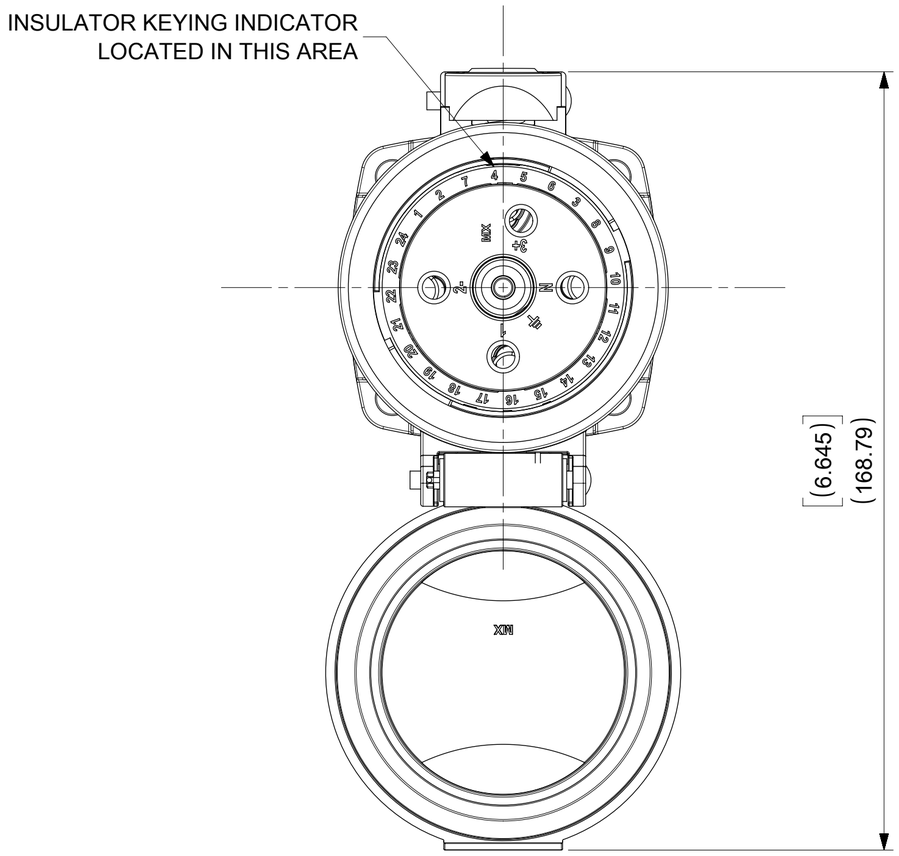

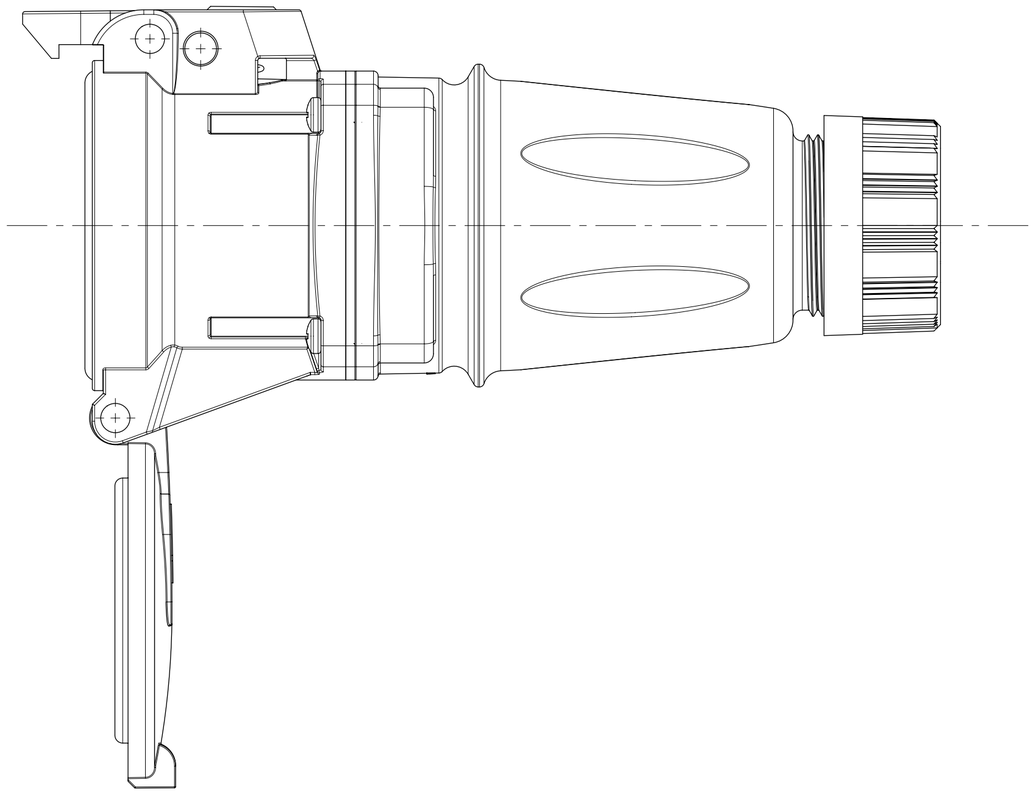

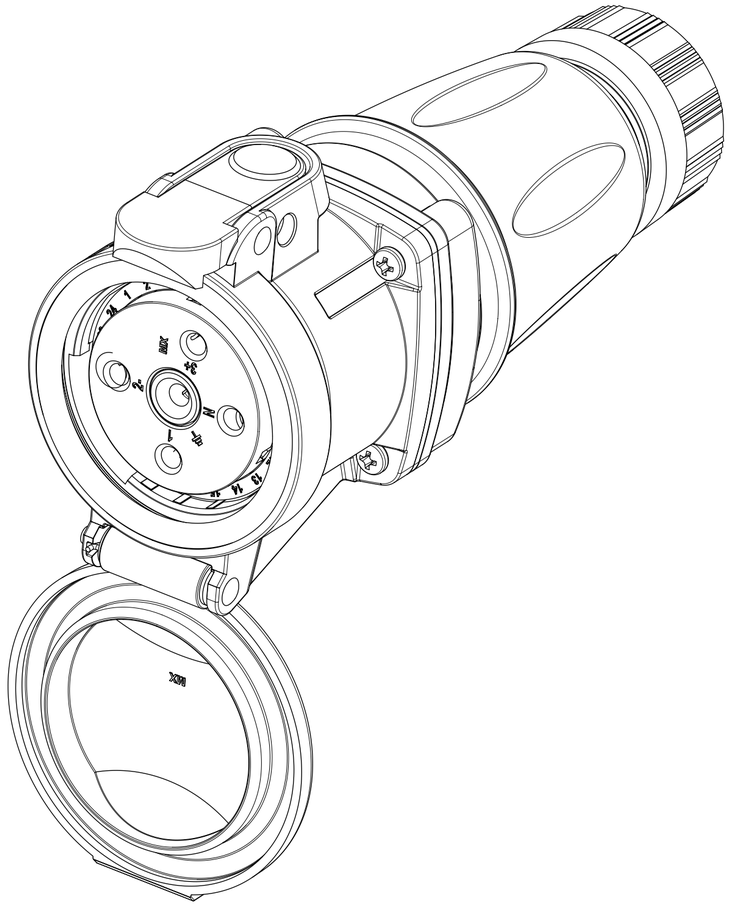

ARC30FHE03 SHOWN

SYMBOLS	
FA = 0	
FC = 0	
FD = 0	
S = 0	
▼ = 0	
C = 0	
☒ = 0	
■ = 0	
V = 0	

THIS DRAWING CONTAINS INFORMATION THAT IS PROPRIETARY TO MOLEX ELECTRONIC TECHNOLOGIES, LLC AND SHOULD NOT BE USED WITHOUT WRITTEN PERMISSION

DIMENSION UNITS	SCALE
INCH	1:1

GENERAL TOLERANCES (UNLESS SPECIFIED)

	MM	INCH
4 PLACES	±	±
3 PLACES	±	±
2 PLACES	±	±
1 PLACE	±	±
0 PLACES	±	±
ANGULAR TOL	± °	

DRAFT WHERE APPLICABLE MUST REMAIN WITHIN DIMENSIONS

CURRENT REV DESC: ADDED 10HP,NEW NOTES

EC NO: 604773
DRWN: MJANTELEZIO 2018/09/20
CHK'D: JFMURPHY 2018/11/05
APPR: JFMURPHY 2018/11/05

INITIAL REVISION:
DRWN: DRWN BY XXXX/XX/XX
APPR: APPR BY XXXX/XX/XX

THIRD ANGLE PROJECTION | DRAWING: C-SIZE | SERIES: 112219

molex

ARC 30A FH 480VAC 3P+G

PRODUCT CUSTOMER DRAWING

DOCUMENT NUMBER	DOC TYPE	DOC PART	REVISION
1122190038	PSD	000	B2

MATERIAL NUMBER	CUSTOMER	SHEET NUMBER
	GENERAL MARKET	2 OF 2

DOCUMENT STATUS	P1	RELEASE DATE	2018/11/05 17:31:27

FORMAT: Eng-tega-master-tb-prod-C
REVISION: 01
DATE: 2018/01/18