THIS DRAWING IS UNPUBLISHED. RELEASED FOR PUBLICATION - ,- .
© COPYRIGHT - By - ALL RIGHTS RESERVED.

LOC	DIST
—	—

REVISIONS

P	LTR	DESCRIPTION	DATE	DWN	APVD
	G	REV PER ECO 13-018917	2-3-14	CT	KH

SQUARE FLANGE MOUNT RECEPTACLES:

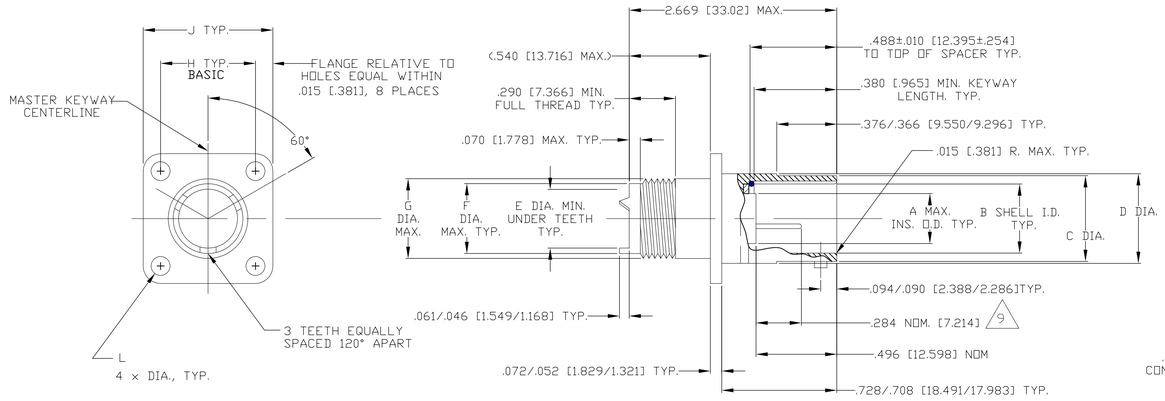

RECEPTACLE SHELL, PIN INSERT

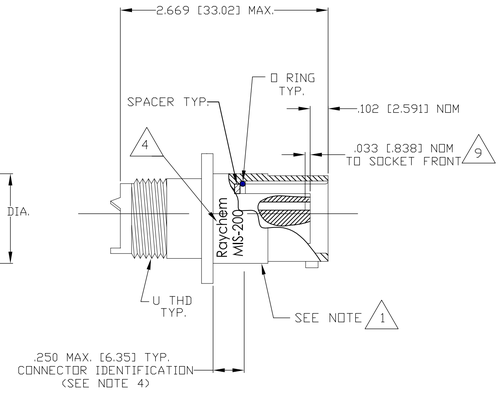

RECEPTACLE SHELL, SOCKET INSERT

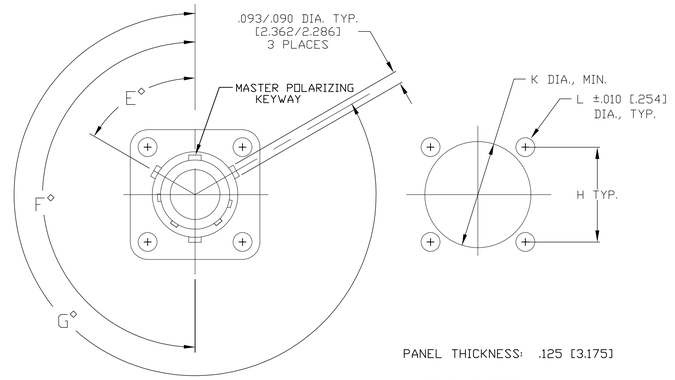

PANEL THICKNESS: .125 [3.175]

PANEL CUTOUT

SHELL ALTERNATE KEYING POSITIONS:

IN THE "ALTERNATE KEYING POSITION" (POSITION 6,7,8,9, AND 10), THE KEYS ARE POSITIONED AS INDICATED IN THE CHART BELOW WITH REFERENCE TO MASTER KEY.
WHEN THE ALTERNATE SHELL KEYING POSITIONS ARE USED, THE APPLICABLE INSERT IS ALWAYS IN THE NORMAL POSITION.

KEY / KEYWAY LOCATIONS

TABLE II

KEYING POSITION	SIZE 12 THRU 24			
	A°	B°	C°	D°
NORMAL	105	140	215	265
6	18	149	192	259
7	92	152	222	342
8	84	152	204	334
9	24	135	199	240
10	98	152	268	338

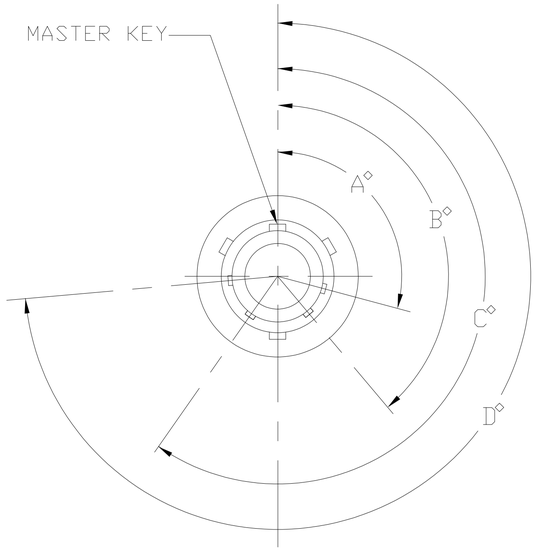

THE FACE OF KEYWAYS FOR PLUG SHELL
KEYWAYS IN RECEPTACLE SHELLS ARE OPPOSITE

TABLE I

SHELL SIZE	A	B	C	D	E	F	G	H	J	K	L	N	E°	F°	G°
12	.558	.705 .700	.829 .824	.875	.613	.687	.750	.812	1.031	.913	.120	3/4-20 UNEF-2A	50	170	290
14	.627	.774 .769	.898 .893	.935	.738	.812	.875	.906	1.125	.980		7/8-20 UNEF-2A			
16	.772	.901 .896	1.025 1.020	1.062	.863	.937	1.000	.969	1.250	1.107		1-20 UNEF-2A			
18	.860	1.007 1.002	1.131 1.126	1.187	.919	.992	1.062	1.062	1.343	1.209		1 1/16-18 UNEF-2A			
20	.985	1.132 1.127	1.256 1.251	1.312	1.044	1.117	1.187	1.156	1.437	1.337	.120	1 3/16-18 UNEF-2A			
24	1.235	1.382 1.377	1.506 1.501	1.562	1.294	1.367	1.437	1.375	1.703	1.577	.149	1 7/16-18 UNEF-2A	50	170	290

METRIC EQUIVALENT MM

SHELL SIZE	A	B	C	D	E	F	G	H	J	K	L
12	14.173	17.907 17.778	21.057 20.930	22.225	15.570	17.450	19.050	20.625	26.187	23.190	3.048
14	15.926	19.660 19.533	22.809 22.682	23.749	18.745	20.625	22.225	23.012	28.575	24.892	
16	19.609	22.889 22.760	26.035 25.908	26.975	21.920	23.800	25.400	24.613	31.750	28.118	
18	21.844	25.578 25.451	28.727 28.600	30.150	23.343	25.197	26.975	26.975	34.112	30.709	
20	25.019	28.753 28.626	31.902 31.775	33.325	26.518	28.372	30.150	29.362	36.500	33.960	3.048
24	31.369	35.103 34.976	38.252 38.125	39.765	32.868	34.722	36.500	34.925	43.256	40.056	3.785

TABLE III

PART NUMBER	WEIGHT in Grams Nominal
RD10A-12-08PX	15.58
RD10A-12-08SX	TBD
RD10A-14-12PX	18.71
RD10A-14-12SX	TBD
RD10A-16-19PX	21.96
RD10A-16-19SX	TBD
RD10A-18-23PX	24.97
RD10A-18-23SX	TBD
RD10A-20-31PX	28.55
RD10A-20-31SX	TBD
RD10A-24-51PX	TBD
RD10A-24-51SX	TBD

TABLE IV

CABLE TYPE	PIN	SOCKET
COAX	D-602-44	D-602-45
TWISTED PAIR	D-602-54	D-602-55
PRIMARY WIRE	D-610-09	D-610-10

PART NUMBER IDENTIFICATION:

RD1 0 A XX-XX X X-CSXXXX

- CUSTOMER PART NUMBER AS REQUESTED
- KEY POSITION: NORMAL= N (SEE TABLE II) 6 7 8 9 10
- CONTACT STYLE:
  P = PIN (POWER OR SHIELDED CONTACT SEE TABLE IV)
  S = SOCKET (POWER OR SHIELDED CONTACT SEE TABLE IV)
- LAYOUT
- SHELL SIZE (SEE TABLE I)

SHELL SIZE	NUMBER OF CAVITIES (SEE SHEET 2)
12	08
14	12
16	19
18	23
20	31
24	51

- SHELL PLATING:A - CADMIUM (OPTIONAL G - ELECTROLESS NICKEL)
- SHELL TYPE: 0 - SQUARE FLANGE MOUNT RECEPTACLE
- RAYCHEM CONNECTOR SERIES RD1

THIS DRAWING IS A CONTROLLED DOCUMENT.	DWN C.C.THOMAS 03FEB2014	TE Connectivity	
DIMENSIONS: INCHES	CHK K.HOGAN 2-3-14	RDI SERIES CONNECTOR, RECEPTACLE	
TOLERANCES UNLESS OTHERWISE SPECIFIED: 0 PLC ± – ; 1 PLC ± – ; 2 PLC ± .01 [0.3] ; 3 PLC ± .005 [0.13] ; 4 PLC ± – ; ANGLES ± 1°	APVD K.HOGAN 2-3-14	NAME – –	
	PRODUCT SPEC –	SIZE A1 / CAGE CODE 00779 / DRAWING NO C-RD10AXX-XXP/SX	RESTRICTED TO –
MATERIAL – 2	APPLICATION SPEC –	WEIGHT SEE TABLE III	
FINISH 8	CUSTOMER DRAWING	SCALE NTS / SHEET 1 OF 3	REV G

4805 (3/11)

8:45am

THIS DRAWING IS UNPUBLISHED. RELEASED FOR PUBLICATION - , - .
© COPYRIGHT - By - ALL RIGHTS RESERVED.

LOC	DIST
—	—

REVISIONS

P	LTR	DESCRIPTION	DATE	DWN	APVD
	–	SEE SHEET 1	–	—	—

▼ SYM. ABOUT VERTICAL INSERT CENTER LINE ONLY

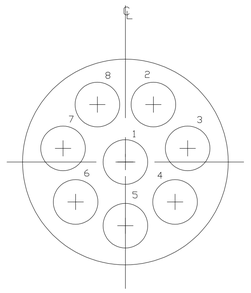

12-08
8 #16 CAVITIES

▼ SYM. ABOUT VERTICAL INSERT CENTER LINE ONLY

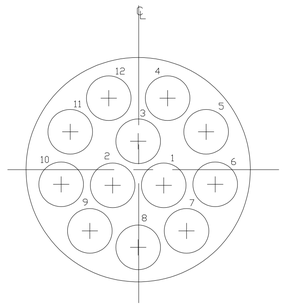

14-12
12 #16 CAVITIES

▼ SYM. ABOUT INSERT CENTER LINE

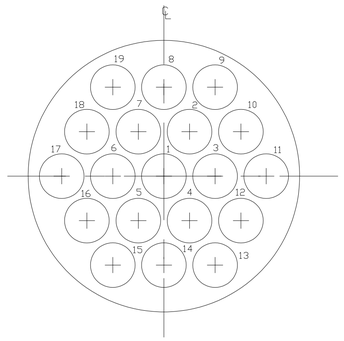

16-19
19 #16 CAVITIES

▼ SYM. ABOUT INSERT CENTER LINE

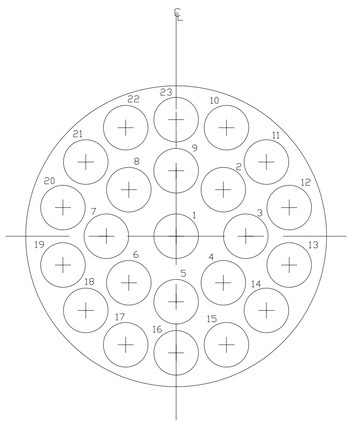

18-23
23 #16 CAVITIES

▼ SYM. ABOUT INSERT CENTER LINE

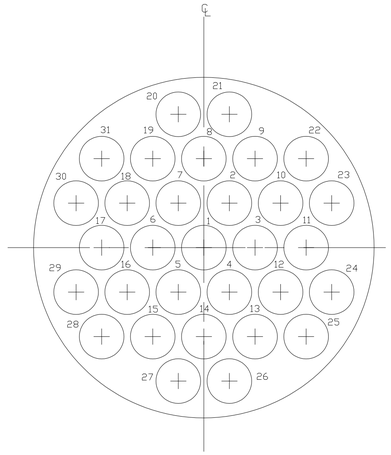

20-31
31 #16 CAVITIES

▼ SYM. ABOUT VERTICAL INSERT CENTER LINE ONLY

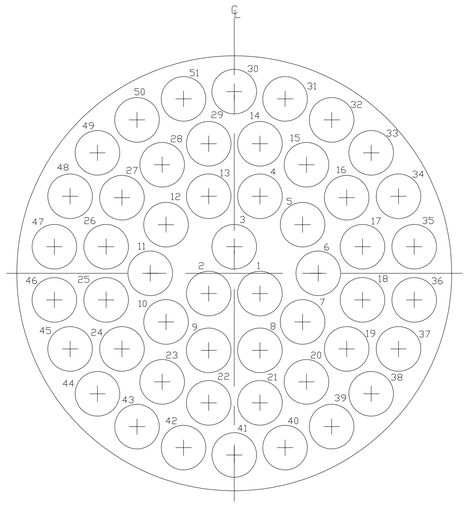

24-51
51 #16 CAVITIES

1. FULLY MATED COUPLING STRIPES SHALL BE COLOR CODED BLUE IN LINE WITH THE BAYONET PINS ON THE RECEPTACLE SHELL.

2. MATERIAL: METAL PARTS, EXCLUSIVE OF BAYONET PINS, COUPLING RING SPRING SHALL BE HIGH GRADE ALUMINUM ALLOY CONFORMING TO ASTM B 211 / SAE AMS-QQ-A 225/10. BAYONET PINS AND COUPLING RING SPRING SHALL BE STAINLESS STEEL.

3. INSERT MATERIAL-MINERAL FILLED PHENOLIC PER ASTM-D5948, TYPE MFH

4. CONNECTOR IDENTIFICATION SHALL CONSIST OF NAME RAYCHEM, TE CONNECTIVITY PART NUMBER, MIS DESCRIPTION (PER TABLE V) AND THE LOT CONTROL NO. OR DATE CODE. ALL CHARACTERS SHALL BE A MINIMUM OF 1/32" IN HEIGHT AND SHALL BE PERMANENTLY AND LEGIBLY MARKED IN LOCATIONS SHOWN. MARKING SHALL BE WITHIN 265° CIRCUMFERENCE. MARKING SHALL BE READ FROM THE MATING FACE UP FOR THE PLUG AND MATING FACE DOWN FOR THE RECEPTACLE.

5. CAVITY IDENTIFICATION NUMBERS SHALL BE AS LARGE AS POSSIBLE, OF A CONTRASTING COLOR, AND LOCATED APPROXIMATELY AS SHOWN.

6. CONTACT IDENTIFICATION IS SHOWN BY LOOKING AT FRONT PIN INSERT FACE.
FRONT SOCKET INSERT FACE IS OPPOSITE.
REAR PIN INSERT FACE IS OPPOSITE.
REAR SOCKET INSERT FACE IS AS SHOWN.

7. ▼ INDICATES SHELL MASTER KEY OR KEYWAY POSITION.

8. SHELL PLATING: CADMIUM PER SAE AMS-QQ-P 416, TYPE II, CLASS 3, .0002/.0005 INCH, OLIVE DRAB, CONDUCTIVE OVER .0002/.0004 INCH ELECTROLESS NICKEL PLATE PER SAE AMS 2404

9. THESE DIMENSIONS ARE SHOWING THE POSITION OF THE PIN AND SOCKET CONTACTS.

10. THIS PRODUCT IS QUALIFIED TO TYCO ELECTRONICS SPECIFICATION D-6001 PER TEST REPORT TR3-6540-001.

THIS DRAWING IS A CONTROLLED DOCUMENT.

DIMENSIONS: INCHES

TOLERANCES UNLESS OTHERWISE SPECIFIED:
0 PLC ± –
1 PLC ± –
2 PLC ± .01 [0.3]
3 PLC ± .005 [0.13]
4 PLC ± –
ANGLES ± 1°

MATERIAL –
FINISH

DWN C.C.THOMAS 03FEB2014
CHK K.HOGAN 2–3–14
APVD K.HOGAN 2–3–14
PRODUCT SPEC —
APPLICATION SPEC —
WEIGHT SEE TABLE III
CUSTOMER DRAWING

TE Connectivity

NAME RDI SERIES CONNECTOR, RECEPTACLE
–
–

SIZE	CAGE CODE	DRAWING NO	RESTRICTED TO
A1	00779	C-RD10AXX-XXP/SX	—

SCALE NTS SHEET 2 OF 3 REV G

4805 (3/11)

11:03am

THIS DRAWING IS UNPUBLISHED. RELEASED FOR PUBLICATION - ,- .
© COPYRIGHT - By - ALL RIGHTS RESERVED.

LOC	DIST
—	—

REVISIONS

P	LTR	DESCRIPTION	DATE	DWN	APVD
	-	SEE SHEET 1	-	—	—

TABLE V

PART NUMBER	MIS DESCRIPTION	RPN
RD10A12-08-PN	MIS-20065/1-001	056815-000
RD10A12-08-P6	MIS-20065/1-002	827981-000
RD10A12-08-P7	MIS-20065/1-003	143129-000
RD10A12-08-P8	MIS-20065/1-004	600243N007
RD10A12-08-P9	MIS-20065/1-005	N/A
RD10A12-08-P10	MIS-20065/1-006	N/A
RD10A14-12-PN	MIS-20065/1-007	600246N009
RD10A14-12-P6	MIS-20065/1-008	600247N007
RD10A14-12-P7	MIS-20065/1-009	600248N007
RD10A14-12-P8	MIS-20065/1-010	600249N006
RD10A14-12-P9	MIS-20065/1-011	330035-000
RD10A14-12-P10	MIS-20065/1-012	539255-000
RD10A16-19-PN	MIS-20065/1-013	600252N009
RD10A16-19-P6	MIS-20065/1-014	600253N007
RD10A16-19-P7	MIS-20065/1-015	429283-000
RD10A16-19-P8	MIS-20065/1-016	600255N006
RD10A16-19-P9	MIS-20065/1-017	182749-000
RD10A16-19-P10	MIS-20065/1-018	112055-000
RD10A18-23-PN	MIS-20065/1-019	600258N009
RD10A18-23-P6	MIS-20065/1-020	600259N006
RD10A18-23-P7	MIS-20065/1-021	936753-000
RD10A18-23-P8	MIS-20065/1-022	600261N005
RD10A18-23-P9	MIS-20065/1-023	600262N004
RD10A18-23-P10	MIS-20065/1-024	N/A
RD10A20-31-PN	MIS-20065/1-025	600264N008
RD10A20-31-P6	MIS-20065/1-026	600265N008
RD10A20-31-P7	MIS-20065/1-027	600266N007
RD10A20-31-P8	MIS-20065/1-028	600267N007
RD10A20-31-P9	MIS-20065/1-029	600268N005
RD10A20-31-P10	MIS-20065/1-030	N/A
RD10A24-51-PN	MIS-20065/1-031	600270N009
RD10A24-51-P6	MIS-20065/1-032	600271N009
RD10A24-51-P7	MIS-20065/1-033	412579-000
RD10A24-51-P8	MIS-20065/1-034	600273N007
RD10A24-51-P9	MIS-20065/1-035	600274N006
RD10A24-51-P10	MIS-20065/1-036	600275N005

NOTE: ALL CONNECTORS LISTED ON TABLE V ARE MEETING THE REQUIREMENTS OF CS051/1.
PARTS ARE MARKED WITH PART NUMBER AND MIS DESCRIPTION.
THE CS051/1 PORTION OF THE PART NUMBER IDENTIFICATION IS NOT INCLUDED IN THE PART NUMBER MARKING.

THIS DRAWING IS A CONTROLLED DOCUMENT.

DIMENSIONS: INCHES

TOLERANCES UNLESS OTHERWISE SPECIFIED:
0 PLC ± –
1 PLC ± –
2 PLC ± .01 [0.3]
3 PLC ± .005 [0.13]
4 PLC ± –
ANGLES ± 1°

MATERIAL –
FINISH

DWN C.C.THOMAS 03FEB2014
CHK K.HOGAN 2-3-14
APVD K.HOGAN 2-3-14
PRODUCT SPEC —
APPLICATION SPEC —
WEIGHT SEE TABLE III
CUSTOMER DRAWING

TE Connectivity

NAME RDI SERIES CONNECTOR, RECEPTACLE
–
–

SIZE	CAGE CODE	DRAWING NO	RESTRICTED TO
A1	00779	C-RD10AXX-XXP/SX	—

SCALE NTS SHEET 3 OF 3 REV G

4805 (3/11)

11:03am