KEY PRODUCT CHARACTERISTICS

SAFETY/COMPLIANCE	FIT/FUNCTION	TOTAL ON DRAWING	0
S/C CHECKPOINTS	F/F CHECKPOINTS	LAST NO. USED	0

NO & TYPE	DESCRIPTION	RATIONALE	PTS	ZONE
- -	- -	- -	-	-

L_m	L_3	L_2	L_1	R_2 ±0.1	R_1 ±0.1	H_2 ±0.2	H_1 ±0.2	B_2 ±0.2	B_1 ±0.2	PITCH TRANSP.	CABLE-TYPE LTG.-TYP	MATERIAL SLEEVE/UEBERFEDER WERKSTOFF	SURFACE SLEEVE/UEBERFEDER OBERFLAECHE	MATERIAL TERM.-BODY/BASISTEIL WERKSTOFF	SURFACE TERM.-BODY/BASISTEIL OBERFLAECHE	CROSS SECTION QUERSCH.	APPLICATION AUSFUEHRUNG	ASSEMBLY PART-NO.	PART-REV	DATE DATUM
13.3	5.3	1.8	2.5	0.9	0.6	2.64	1.9	2.57	1.93	5.08	FLRY-B	X12CrNi177	BLANK	CuNiSi	f.Sn3	0.35-0.50	BASIC-APPLICATION	15440179	01	09AUO4
13.3	5.3	1.8	2.5	0.9	0.8	3.23	2.52	2.82	2.57	10.16	FLRY-B	X12CrNi177	BLANK	CuNiSi	f.Sn3	0.60-0.75	BASIC-APPLICATION	15440181	01	09AUO4
13.3	5.3	1.8	2.5	0.9	0.6	2.64	1.9	2.57	1.93	5.08	FLRY-B	X12CrNi177	BLANK	CuNiSi	sel.Au	0.35-0.50	BASIC-APPLICATION	15440183	01	09AUO4
13.3	5.3	1.8	2.5	0.9	0.8	3.23	2.52	2.82	2.57	10.16	FLRY-B	X12CrNi177	BLANK	CuNiSi	sel.Au	0.60-0.75	BASIC-APPLICATION	15440185	01	09AUO4
13.3	5.3	1.8	2.5	0.9	0.6	2.64	1.9	2.57	1.93	5.08	FLRY-B	X12CrNi177	BLANK	CuNiSi	twin-dot sel.Au	0.35-0.50	BASIC-APPLICATION	---	---	---
13.3	5.3	1.8	2.5	0.9	0.8	3.23	2.52	2.82	2.57	10.16	FLRY-B	X12CrNi177	BLANK	CuNiSi	twin-dot sel.Au	0.60-0.75	BASIC-APPLICATION	---	---	---
13.9	5.9	2.0	2.5	1.55	0.6	3.29	1.9	3.79	1.93	10.16	FLRY-B	X12CrNi177	BLANK	CuNiSi	f.Sn3	0.35-0.50	SINGLE/SEALED-APPL.	---	---	---
13.9	5.9	2.0	2.5	1.55	0.8	3.29	2.52	3.79	2.57	10.16	FLRY-B	X12CrNi177	BLANK	CuNiSi	f.Sn3	0.60-0.75	SINGLE/SEALED-APPL.	---	---	---
13.9	5.9	2.0	2.5	1.55	0.6	3.29	1.9	3.79	1.93	10.16	FLRY-B	X12CrNi177	BLANK	CuNiSi	sel.Au	0.35-0.50	SINGLE/SEALED-APPL.	---	---	---
13.9	5.9	2.0	2.5	1.55	0.8	3.29	2.52	3.79	2.57	10.16	FLRY-B	X12CrNi177	BLANK	CuNiSi	sel.Au	0.60-0.75	SINGLE/SEALED-APPL.	---	---	---
13.3	5.3	1.8	2.5	0.9	0.6	2.64	1.9	2.57	1.93	5.08	FPC	X12CrNi177	BLANK	CuNiSi	f.Sn3	---	FPC-APPLICATION	---	---	---
13.3	5.3	1.8	2.5	0.9	0.6	2.64	1.9	2.57	1.93	5.08	FPC	X12CrNi177	BLANK	CuNiSi	sel.Au	---	FPC-APPLICATION	---	---	---

BASIC APPLICATION / STANDART VARIANTE

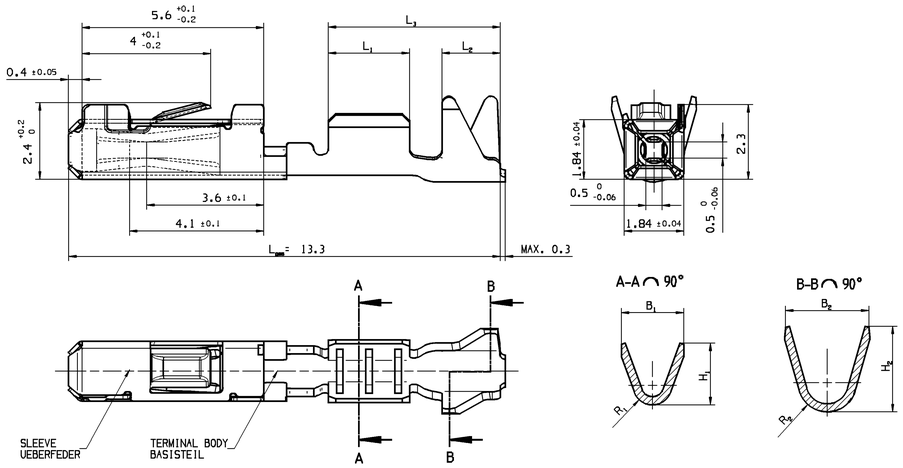

SINGLE CONDUCTOR SEALED / EINZELADER GEDICHTETE VARIANTE

MISSING DIMENSIONS, SEE BASIC APPLICATION
FEHLENDE MASSE, SIEHE STANDART VARIANTE

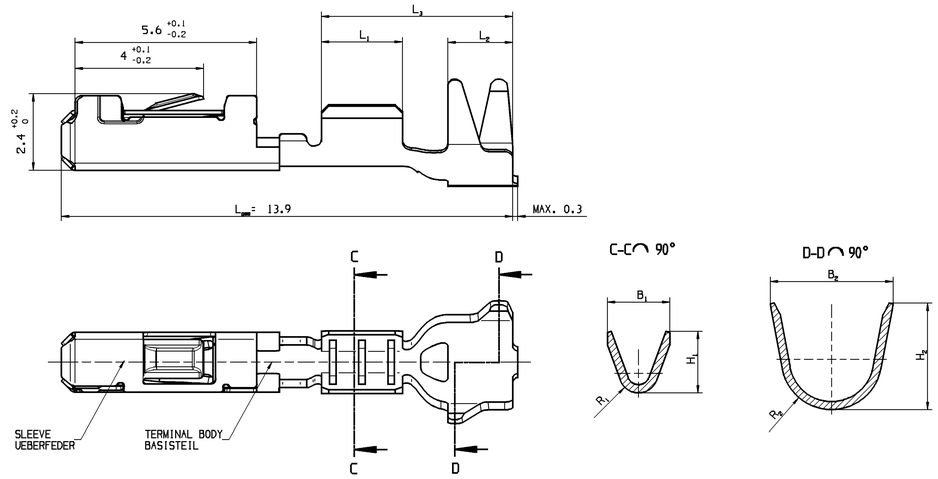

FLEXIBLE-PRINTED-CICURIT APPLICATION / FPC VARIANTE

MISSING DIMENSIONS, SEE BASIC APPLICATION
FEHLENDE MASSE, SIEHE STANDART VARIANTE

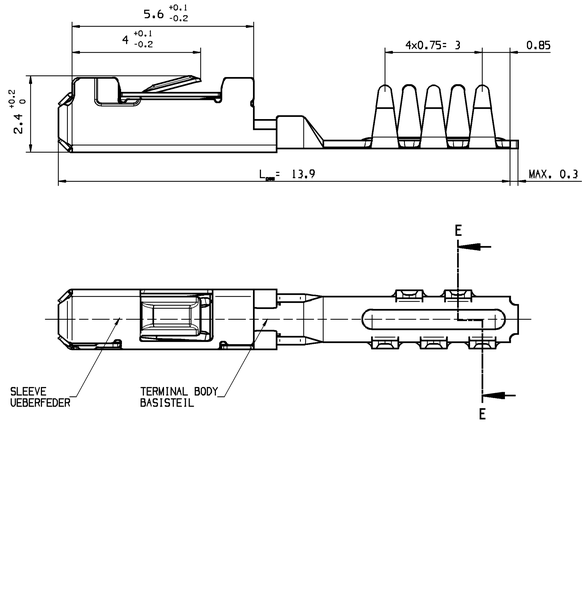

VIEW OF THE CARRIER STRIP
IS NOT IN SCALE
ABBILDUNG DES ANBINDUNGS-
STREIFENS NICHT MASSSTAEBLICH

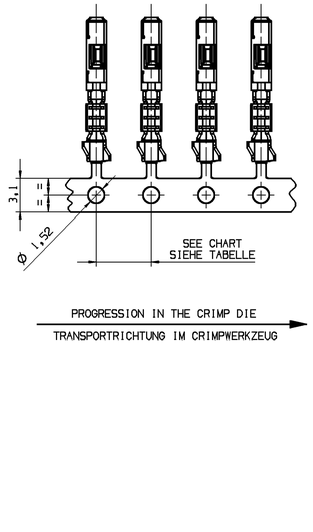

ZONE	DWG STATUS REV	N/P	CHG	REVISION HISTORY	DATE	NAME	CHECK	STCHK
	01			INITIAL RELEASE / FREIGABE	09AUO4	M.SACH	CVASA	R.WIS.

SCALE/MASSSTAB 1:1

SCALE/MASSSTAB 5:1

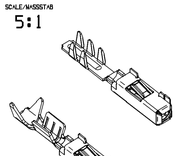

COPYING OF THIS DOCUMENT, AND GIVING IT TO OTHERS AND THE USE OR COMMUNICATION OF THE CONTENTS THEREOF, ARE FORBIDDEN WITHOUT EXPRESS AUTHORITY. OFFENDERS ARE LIABLE TO THE PAYMENT OF DAMAGES. ALL RIGHTS ARE RESERVED IN THE EVENT OF THE GRANT OF A PATENT OR THE REGISTRATION OF A UTILITY MODEL OR DESIGN. WEITERGABE SOWIE VERVIELFAELTIGUNG DIESER UNTERLAGE, SOWIE VERWERTUNG UND MITTEILUNG IHRES INHALTS NICHT GESTATTET, SOWEIT NICHT AUSDRUECKLICH GESTATTET. ZUWIDERHANDLUNGEN VERPFLICHTEN ZU SCHADENSERSATZ. ALLE RECHTE FUER DEN FALL DER PATENTERTEILUNG ODER GEBRAUCHSMUSTereintragung VORBEHALTEN.

CAD UNIGRAPHICS DELPHI D - 42119 WUPPERTAL

	DATE	NAME
DRAWN BY / GEZEICHNET	09AUO4	M.SACH
CHECKED BY / GEPRUEFT	09AUO4	CVASA
STANDARD QA / NORM. BETRIEB	10AUO4	R.WIS.

VOLUME / WEIGHT (CUFT / GRM)

MATERIAL / WERKSTOFF: SEE CHART / SIEHE TABELLE

TITLE/BENENNUNG
MICRO TERMINAL SYSTEM II 0.64
FEMALE TERMINAL; VERSION II
MICRO TERMINAL SYSTEM II 0.64
STECKHUELSE; AUSFUEHRUNG II

DIMENSIONAL RANGE (MM) NENNMASSBEREICH (MM)		
FROM	0	>12
TO	12	
TOLERANCE UNLESS OTHERWISE SPECIFIED ALLGEMEINTOLERANZEN		
	±0.1	±0.2
ANGULAR TOLERANCE ± 2° WINKELTOLERANZ ± 2°		

PROJECTION	DRAWING-NO.:	PAGE - FROM	STATUS	SCALE/MASSSTAB
	15440177	01 - 01	KZUS	10:1 1:1:5:1

ORIGINAL DESIGN / ERSTELLUNG DER ORIGINALZEICHNUNG | DRAWING-REF. NO:ZEICHNUNGS-/TEIL-NR | FORMAT: A0

CONTROLLED DOCUMENTS ARE ONLY AVAILABLE ON THE SERVER

DELPHI D - 42119 WUPPERTAL

DELPHI