REV.	ECN NO.	DATE	SIGN	DESCRIPTION
B	LEN1570078	2015/05/29	Ruru	Change Logo

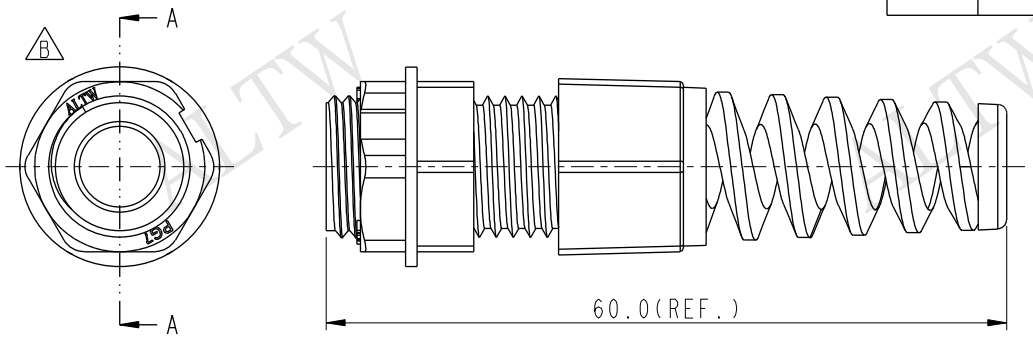

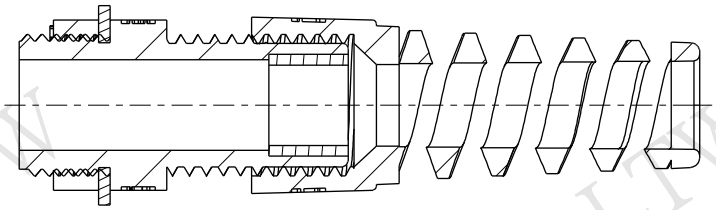

Section A-A

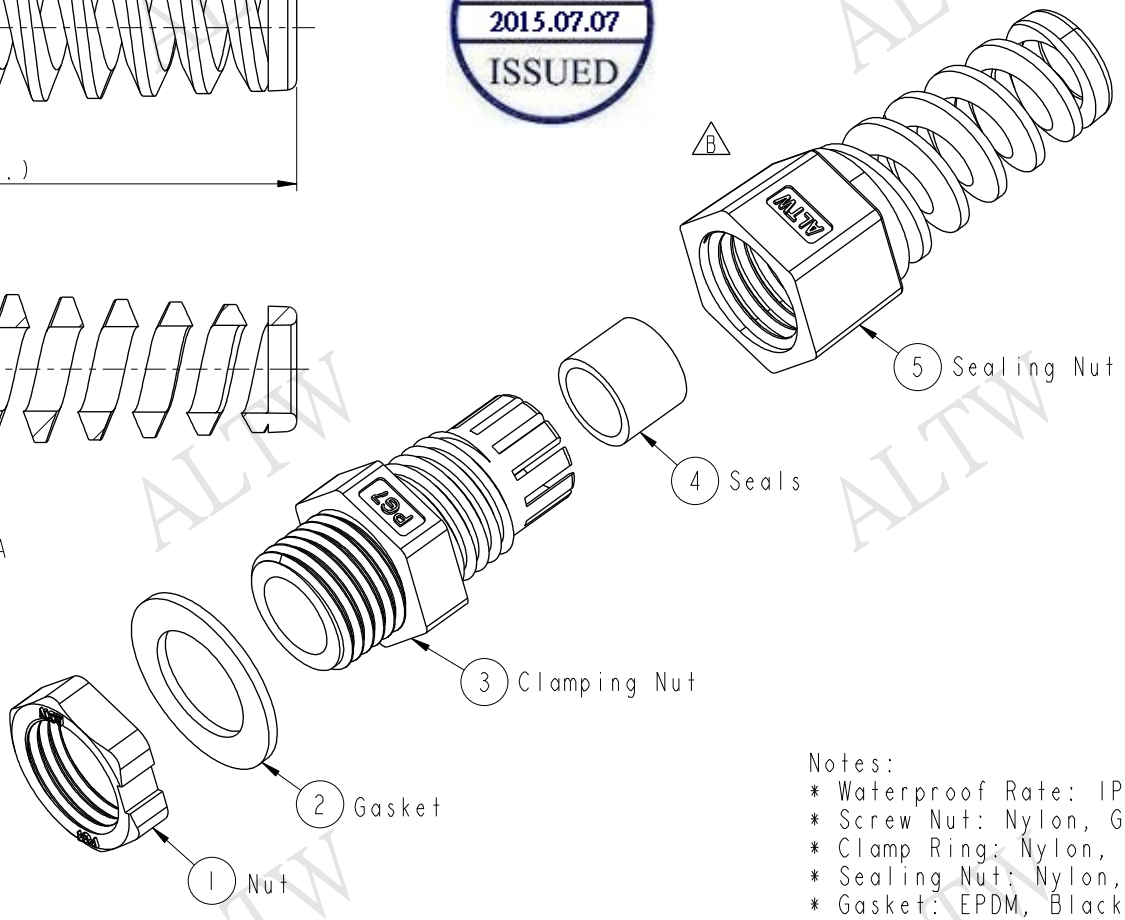

ALTW DCC. DEPT. CONFIDENTIAL 2015.07.07 ISSUED

ALTW CONFIDENTIAL 2015-05-29 R&D DEPT.

Notes:
* Waterproof Rate: IP68
* Screw Nut: Nylon, Gray
* Clamp Ring: Nylon, Gray
* Sealing Nut: Nylon, Gray
* Gasket: EPDM, Black
* Seals: EPDM, Black
* Panel Thickness: 3mm max.
* Cable Range: ∅4.5mm~∅6.5mm

UNIT: mm

TOLERANCE
.X ±0.25
.XX ±0.1
.XXX ±0.05
ANGLES ±1°

TITLE	PG 7 CABLE GLAND WITH SR		
SCALE 3:2	SIZE A4	SHEET 1 OF 1	
REV. B	WC-REV. A.1	QC: Inspection item	

Amphenol LTW
安費諾亮泰企業股份有限公司

ITEM NO CSG-07G004	DRAWN BY Ruru	DATE 2015-05-29
DWG NO CSG-07G004	CHECKED BY Rita	DATE 2015-05-29
CUSTOMER ALTW	APPROVED BY Lion	DATE 2015-05-29

FMW10702-01-02A1

THIS DOCUMENT IS SUBJECT TO CHANGE WITHOUT NOTICE. IT IS CONFIDENTIAL AND A PROPERTY OF Amphenol LTW. DISCLOSURE TO THIRD PARTY HAS TO BE AUTHORIZED BY Amphenol LTW.