Chip Schottky Barrier Rectifier

CDBD1040-G Thru. CDBD10200-G

Reverse Voltage: 40 to 200 Volts
Forward Current: 10.0 Amp
RoHS Device

Features

- Batch process design, excellent power dissipation offers better reverse leakage current and thermal resistance.
- Low power loss, high efficiency.
- High current capability, low forward voltage drop.
- High surge capability.
- Guard ring for overvoltage protection.
- Ultra high-speed switching.
- Silicon epitaxial planar chip, metal silicon junction.
- Lead-free part meets environmental standards of MIL-STD-19500 /228

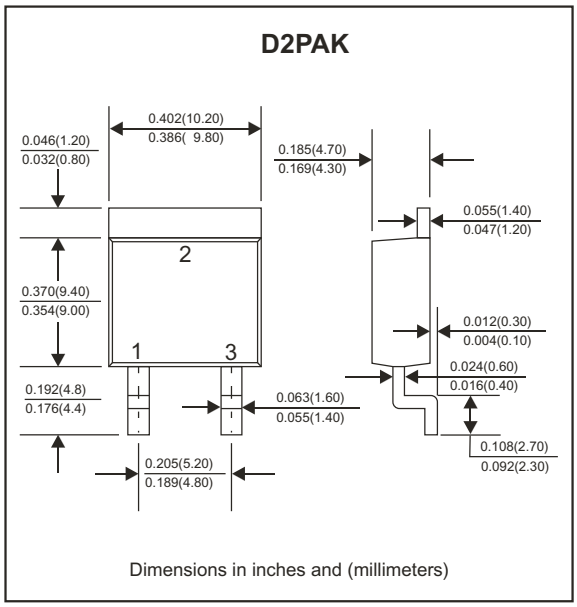

Mechanical data

- Case: TO-263/D2PAK, molded plastic.
- Terminals: Solder plated, Solderable per MIL-STD-750, method 2026.
- Polarity: Indicated by cathode band.
- Mounting Position: Any
- Weight:1.46 grams (approx.).

Circuit Diagram

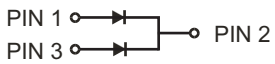

Maximum Ratings (At Ta=25°C, unless otherwise noted)

Parameter		Symbol	CDBD 1040-G	CDBD 1060-G	CDBD 10100-G	CDBD 10150-G	CDBD 10200-G	Unit
Repetitive peak reverse voltage		V_{RRM}	40	60	100	150	200	V
Continuous reverse voltage		V_R	40	60	100	150	200	V
RMS voltage		V_{RMS}	28	42	70	105	140	V
Maximum forward rectified current (See fig. 1)		I_O	10.0					A
Maximum forward voltage I_F=5.0A		V_F	0.55	0.75	0.85	1.00		V
Maxium forward surge current, 8.3ms singlehalf sine-wave superimposed on rate load (JEDEC method)		I_{FSM}	150					A
Maximum reverse current	V_R=V_{RRM} T_A=25°C	I_R	0.5					mA
	V_R=V_{RRM} T_A=100°C	I_R	50					mA
Typical thermal resistance	Junction to Case	$R_{\theta Jc}$	3.0					°C/W
Operating temperature		T_J	-55 to +125	-55 to +150				°C
Storage temperature		T_{STG}	-65 to +175					°C

Company reserves the right to improve product design , functions and reliability without notice.

RATING AND CHARACTERISTIC CURVES (CDBD1040-G Thru. CDBD10200-G)

FIG.1- Typical Forward Current Derating Curve

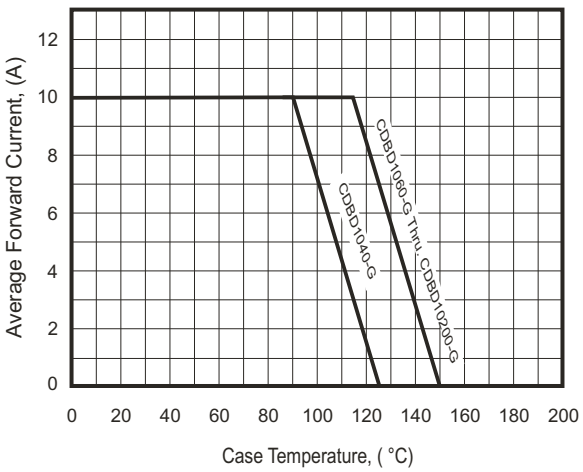

FIG.2- Typical Forward Characteristics

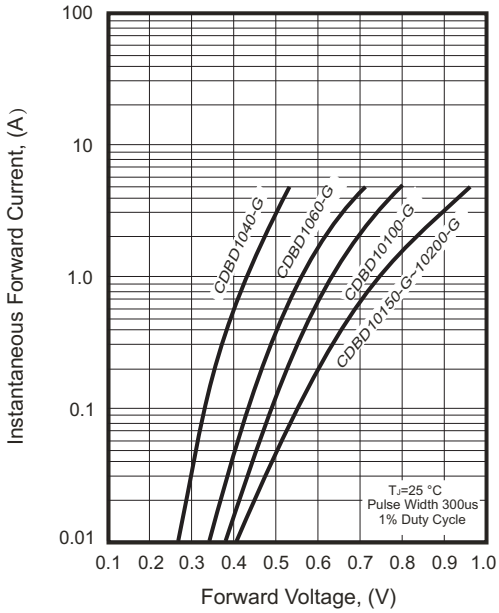

FIG.3- Maximum Non-Repetitive Forward Surge Current

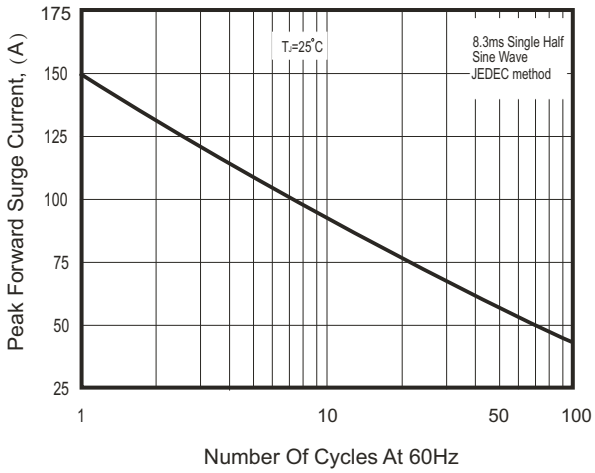

FIG.4 - Typical Reverse Characteristics

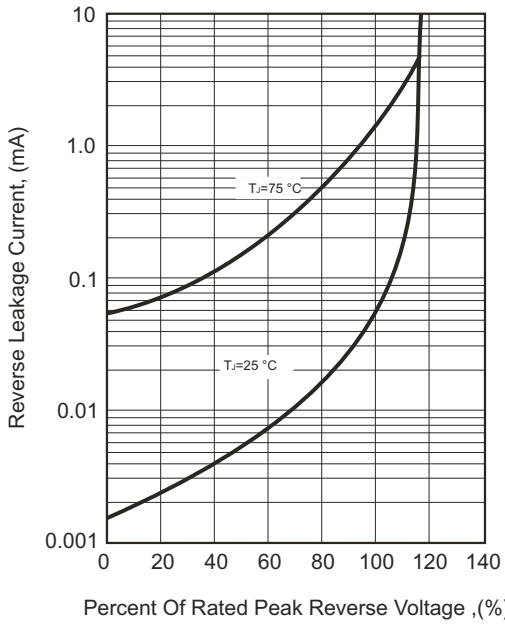

Reel Taping Specification

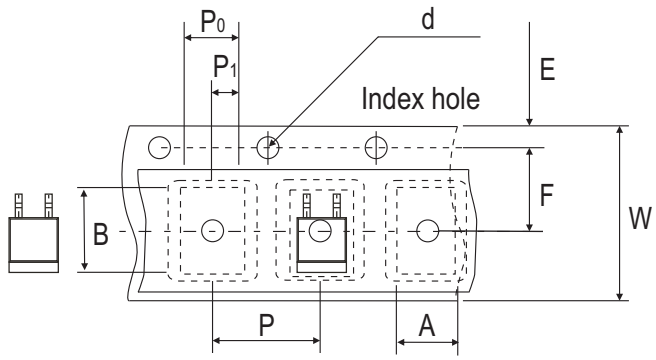

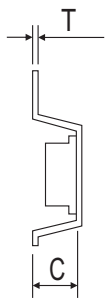

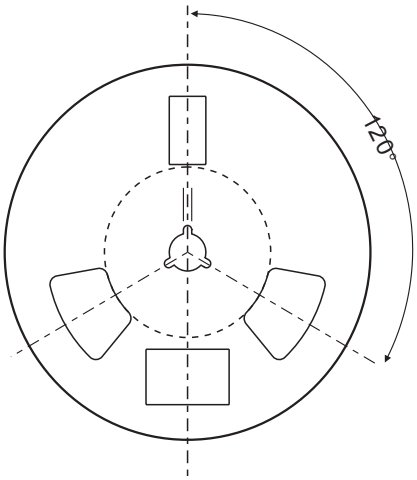

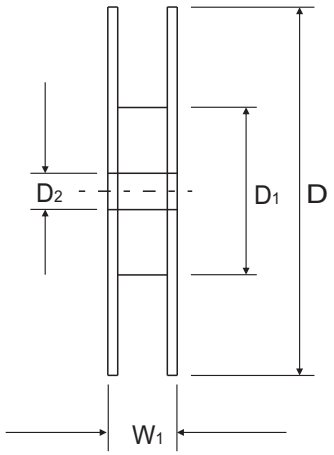

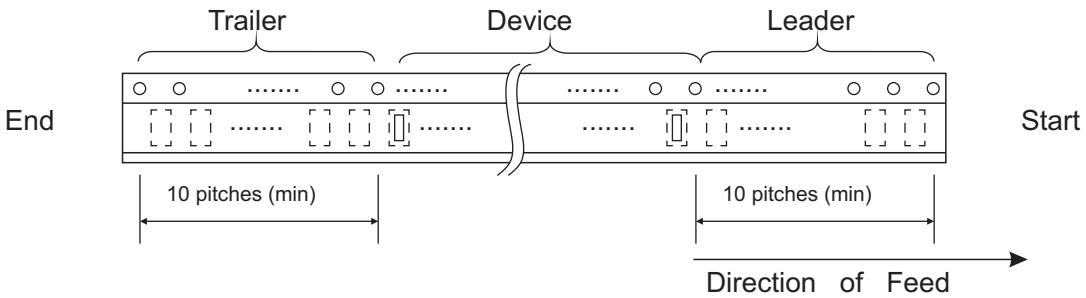

	SYMBOL	A	B	C	d	D	D1	D2
TO-263/D2PAK	(mm)	10.70 ± 0.10	16.30 ± 0.10	5.10 ± 0.10	1.50 ± 0.10	330.00 ± 2.00	50.0 MIN.	13.0 ± 0.50
	(inch)	0.421 ± 0.004	0.642 ± 0.004	0.201 ± 0.004	0.059 ± 0.004	13.00 ± 0.079	1.969 MIN.	0.512 ± 0.020

	SYMBOL	E	F	P	P0	P1	T	W	W1
TO-263/D2PAK	(mm)	1.75 ± 0.10	11.50 ± 0.10	16.00 ± 0.10	4.00 ± 0.10	2.00 ± 0.10	0.23 ± 0.10	24.00 ± 0.30	30.00 ± 1.0
	(inch)	0.069 ± 0.004	0.453 ± 0.004	0.630 ± 0.004	0.157 ± 0.004	0.079 ± 0.004	0.009 ± 0.004	0.945 ± 0.012	1.181 ± 0.039

Company reserves the right to improve product design , functions and reliability without notice.

Marking Code

Part Number	Marking Code
CDBD1040-G	SK1040
CDBD1060-G	SK1060
CDBD10100-G	SK10100
CDBD10150-G	SK10150
CDBD10200-G	SK10200

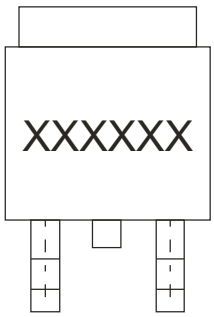

XXXXXX / XXXXXXX = Product type marking code

Suggested PAD Layout

SIZE	TO-263 / D2PAK	
	(mm)	(inch)
A	9.50	0.374
B	2.50	0.098
C	16.90	0.665
X1	10.80	0.425
X2	1.80	0.071
Y1	11.40	0.449
Y2	3.50	0.138

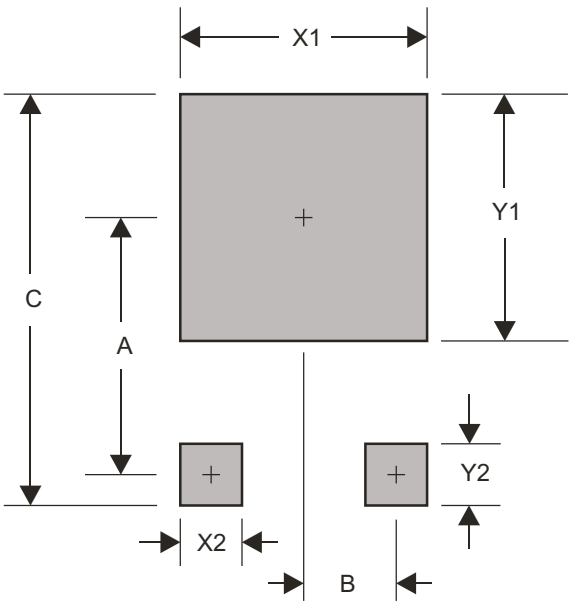

Standard Packaging

Case Type	REEL PACK	
	REEL (pcs)	Reel Size (inch)
TO-263/D2PAK	800	13