THIS DRAWING AND THE INFORMATION SET FORTH HEREON ARE THE PROPERTY OF TYCO ELECTRONICS, AND ARE TO BE HELD IN TRUST AND CONFIDENCE. PUBLICATION, DUPLICATION, DISCLOSURE, OR USE FOR ANY PURPOSE NOT EXPRESSLY UTHORIZED IN WRITING BY TYCO ELECTRONICS IS PROHIBITED.

REVISIONS

| LTR | DESCRIPTION | | DATE | APPROVED |
|---|---|---|---|---|
| G | REV PER ECO 13-001461 | CT | 4-29-13 | KH |

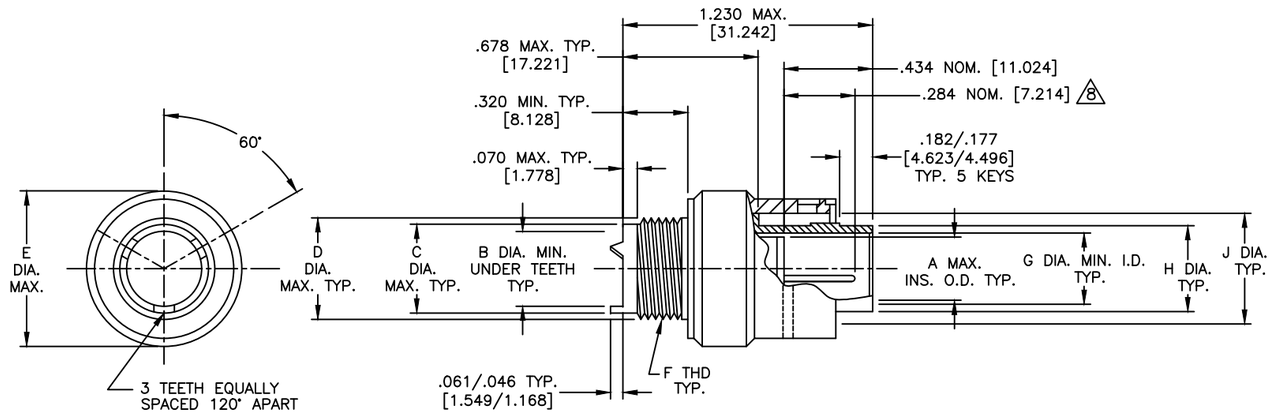


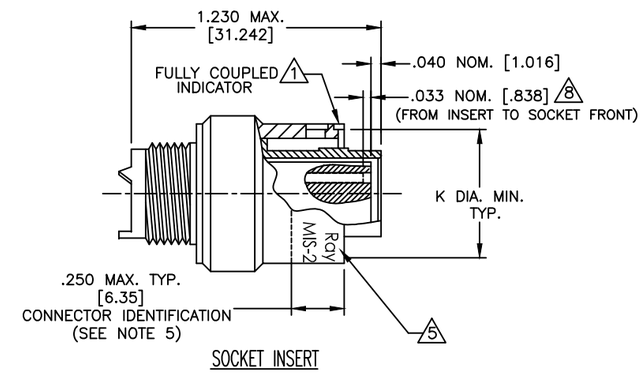


SHELL ALTERNATE KEYING POSITIONS:

IN THE "ALTERNATE KEYING POSITION" (POSITION 6,7,8,9, AND 10), THE KEYS ARE POSITIONED AS INDICATED IN THE CHART BELOW WITH REFERENCE TO MASTER KEY.

WHEN THE ALTERNATE SHELL KEYING POSITIONS ARE USED, THE APPLICABLE INSERT IS ALWAYS IN THE NORMAL POSITION.

KEY / KEYWAY LOCATIONS

TABLE II

| KEYING POSITION | SIZE 12 THRU 24 | | | |
|---|---|---|---|---|
| | A° | B° | C° | D° |
| NORMAL | 105 | 140 | 215 | 265 |
| 6 | 18 | 149 | 192 | 259 |
| 7 | 92 | 152 | 222 | 342 |
| 8 | 84 | 152 | 204 | 334 |
| 9 | 24 | 135 | 199 | 240 |
| 10 | 98 | 152 | 268 | 338 |

TABLE I

| SHELL SIZE | A | B | C | D | E | F | G | H | J | K |
|---|---|---|---|---|---|---|---|---|---|---|
| 12 | .558 | .613 | .687 | .750 | 1.078 | 3/4-20 UNEF-2A | .598 | .696 / .691 | .837 / .832 | .930 |
| 14 | .627 | .738 | .812 | .875 | 1.141 | 7/8-20 UNEF-2A | .667 | .765 / .760 | .906 / .901 | .999 |
| 16 | .772 | .863 | .937 | 1.000 | 1.266 | 1-20 UNEF-2A | .794 | .892 / .887 | 1.033 / 1.028 | 1.126 |
| 18 | .860 | .919 | .992 | 1.062 | 1.375 | 1 1/16-18 UNEF-2A | .900 | .998 / .993 | 1.139 / 1.134 | 1.232 |
| 20 | .985 | 1.044 | 1.117 | 1.187 | 1.510 | 1 3/16-18 UNEF-2A | 1.025 | 1.123 / 1.118 | 1.266 / 1.261 | 1.357 |
| 24 | 1.235 | 1.294 | 1.367 | 1.437 | 1.760 | 1 7/16-18 UNEF-2A | 1.275 | 1.373 / 1.368 | 1.516 / 1.511 | 1.607 |

METRIC EQUIVALENT MM

| SHELL SIZE | A | B | C | D | E | G | H | J | K |
|---|---|---|---|---|---|---|---|---|---|
| 12 | 14.173 | 15.570 | 17.450 | 19.050 | 27.381 | 15.189 | 17.678 / 17.551 | 21.260 / 21.133 | 23.622 |
| 14 | 15.926 | 18.745 | 20.625 | 22.225 | 28.981 | 16.942 | 19.431 / 19.304 | 23.012 / 22.885 | 25.375 |
| 16 | 19.609 | 21.920 | 23.800 | 25.400 | 32.156 | 20.168 | 22.657 / 22.530 | 26.236 / 26.111 | 28.600 |
| 18 | 21.844 | 23.343 | 25.197 | 26.975 | 34.925 | 22.860 | 25.349 / 25.222 | 28.931 / 28.804 | 31.293 |
| 20 | 25.019 | 26.518 | 28.372 | 30.150 | 38.354 | 26.035 | 28.524 / 28.397 | 32.156 / 32.029 | 34.468 |
| 24 | 31.369 | 32.868 | 34.722 | 36.500 | 44.704 | 32.385 | 34.874 / 34.747 | 38.506 / 38.379 | 40.818 |

PART NUMBER IDENTIFICATION:

RD1 6 A XX-XX X X-CSXXXX

- CUSTOMER PART NUMBER AS REQUESTED
- KEY POSITION: NORMAL= N (SEE TABLE II) 6 7 8 9 10
- CONTACT STYLE: P = PIN (POWER OR SHIELDED CONTACT SEE TABLE IV); S = SOCKET (POWER OR SHIELDED CONTACT SEE TABLE IV)
- LAYOUT / SHELL SIZE (SEE TABLE I)

| SHELL SIZE | NUMBER OF CAVITIES (SEE SHEET 2) |
|---|---|
| 12 | 08 |
| 14 | 12 |
| 16 | 19 |
| 18 | 23 |
| 20 | 31 |
| 24 | 51 |

- SHELL PLATING: A - CADMIUM (OPTIONAL G - ELECTROLESS NICKEL)
- SHELL TYPE: 6 - PLUG, R.F.I. GROUNDING
- RAYCHEM CONNECTOR SERIES RD1

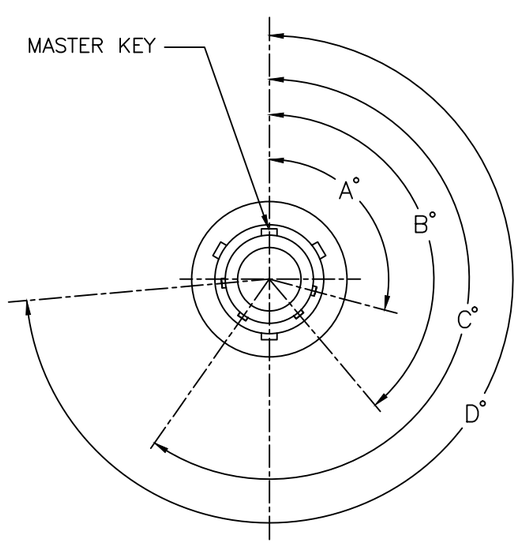


THE FACE OF KEYWAYS FOR PLUG SHELL

TABLE III

| PART NUMBER | WEIGHT in Grams Nominal |
|---|---|
| RD16A-12-08PX | TBD |
| RD16A-12-08SX | 22.94 |
| RD16A-14-12PX | 23.25 |
| RD16A-14-12SX | TBD |
| RD16A-16-19PX | TBD |
| RD16A-16-19SX | 28.74 |
| RD16A-18-23PX | TBD |
| RD16A-18-23SX | 34.03 |
| RD16A-20-31PX | TBD |
| RD16A-20-31SX | 39.74 |
| RD16A-24-51PX | TBD |
| RD16A-24-51SX | 51.29 |

TABLE IV

| CABLE TYPE | PIN | SOCKET |
|---|---|---|
| COAX | D-602-44 | D-602-45 |
| TWISTED PAIR | D-602-54 | D-602-55 |
| PRIMARY WIRE | D-610-09 | D-610-10 |

© 2011-2012 Tyco Electronics. All rights reserved.

Raychem MTC CUSTOMER DRAWING

THIS DRAWING IS A CONTROLLED DOCUMENT.

DIMENSIONING AND TOLERANCING PER ASME Y14.5M (ISO STANDARDS)

THIS DRAWING AND THE INFORMATION SET FORTH HEREON ARE THE PROPERTY OF TYCO ELECTRONICS AND ARE TO BE HELD IN TRUST AND CONFIDENCE. PUBLICATION, DUPLICATION, DISCLOSURE OR USE FOR ANY PURPOSE NOT EXPRESSLY AUTHORIZED IN WRITING BY TYCO ELECTRONICS IS PROHIBITED.

UNLESS OTHERWISE SPECIFIED DIMENSIONS ARE IN INCHES. METRIC DIMENSIONS ARE IN BRACKETS.
DECIMALS
.XXX ± .005 [.127 mm]
.XX ± .01 [.254 mm]
ANGLES 1°

WEIGHT: SEE TABLE III

| | | |
|---|---|---|
| DRAWN Zsofia O. | DATE Nov/19/2010 | TE Connectivity |
| CHECKED | DATE | |
| APPROVED M.HIGGY | DATE Nov/19/2010 | TITLE RD1 SERIES CONNECTOR PLUG |
| THIRD ANGLE PROJECTION | | |
| CAD NAME RD16AXX-XXP/SX | | |
| RPN: | | |

| SIZE | CAGE CODE: | DWG. NO. | REV |
|---|---|---|---|
| D | 06090 | RD16AXX-XXP/SX | G |

SCALE: NONE SHEET 1 OF 3

SHEET 1 DWG NO. RD16AXX-XXP/SX

SYM. ABOUT VERTICAL INSERT CENTER LINE ONLY

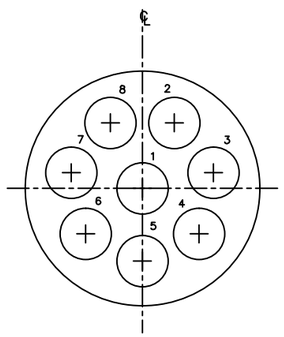

12-08
8 #16 CAVITIES

SYM. ABOUT VERTICAL INSERT CENTER LINE ONLY

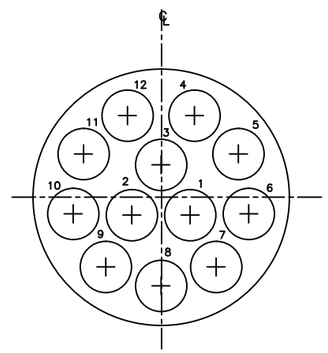

14-12
12 #16 CAVITIES

SYM. ABOUT INSERT CENTER LINE

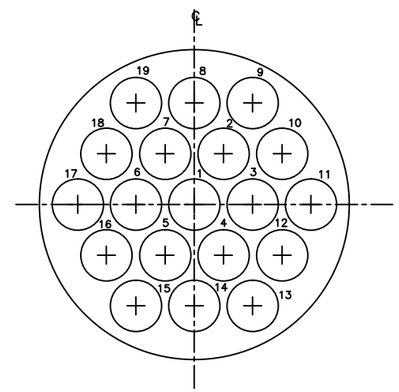

16-19
19 #16 CAVITIES

SYM. ABOUT INSERT CENTER LINE

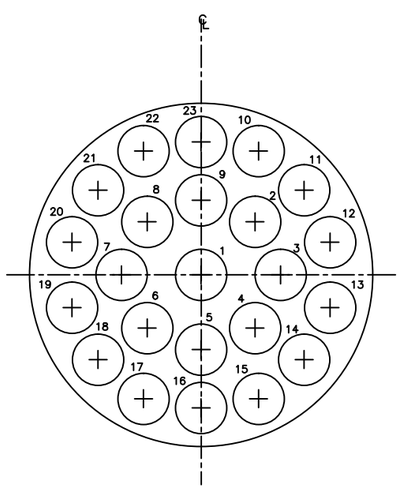

18-23
23 #16 CAVITIES

SYM. ABOUT INSERT CENTER LINE

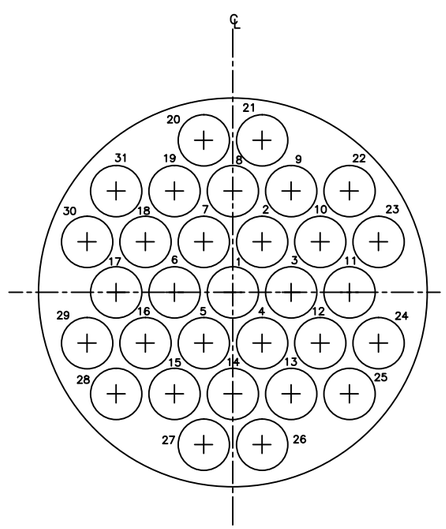

20-31
31 #16 CAVITIES

SYM. ABOUT VERTICAL INSERT CENTER LINE ONLY

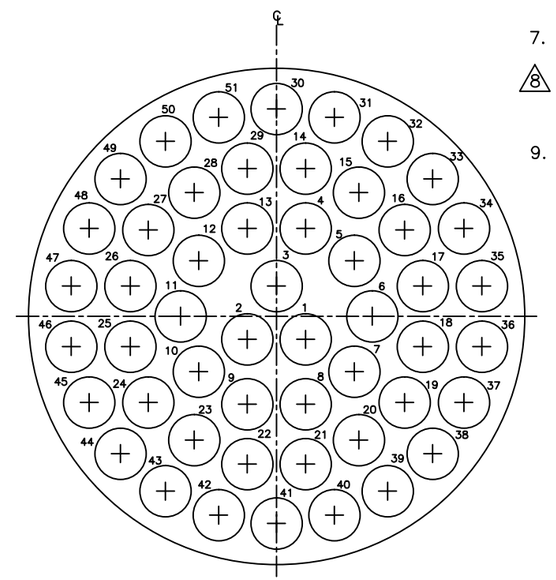

24-51
51 #16 CAVITIES

NOTES:

1. FULLY MATED COUPLING STRIPES SHALL BE COLOR CODED BLUE IN LINE WITH THE BAYONET HOLES ON THE COUPLING PLUG.

2. MATERIAL: METAL PARTS, EXCLUSIVE OF BAYONET PINS, COUPLING RING SPRING AND SNAP RINGS SHALL BE HIGH GRADE ALUMINUM ALLOY CONFORMING TO ASTM B 211 / SAE AMS-QQ-A 225/10. BAYONET PINS AND COUPLING RING SPRING SHALL BE STAINLESS STEEL.

3. INSERT MATERIAL-MINERAL FILLED PHENOLIC PER ASTM-D5948, TYPE MFH

4. SHELL PLATING: CADMIUM PER SAE AMS-QQ-P 416, TYPE II, CLASS 3, .0002/.0005 INCH, OLIVE DRAB, CONDUCTIVE OVER .0002/.0004 INCH ELECTROLESS NICKEL PLATE PER SAE AMS 2404

5. CONNECTOR IDENTIFICATION SHALL CONSIST OF NAME RAYCHEM, TE CONNECTIVITY PART NUMBER, MIS DESCRIPTION (PER TABLE V) AND THE LOT CONTROL NO. OR DATE CODE. ALL CHARACTERS SHALL BE A MINIMUM OF 1/32" IN HEIGHT AND SHALL BE PERMANENTLY AND LEGIBLY MARKED IN LOCATIONS SHOWN. MARKING SHALL BE WITHIN 265° CIRCUMFERENCE. MARKING SHALL BE READ FROM THE MATING FACE UP FOR THE PLUG AND MATING FACE DOWN FOR THE RECEPTACLE.

6. CONTACT IDENTIFICATION IS SHOWN BY LOOKING AT FRONT PIN INSERT FACE.
FRONT SOCKET INSERT FACE IS OPPOSITE.
REAR PIN INSERT FACE IS OPPOSITE.
REAR SOCKET INSERT FACE IS AS SHOWN.

7. ▼ INDICATES SHELL MASTER KEY OR KEYWAY POSITION.

8. THESE DIMENSIONS ARE SHOWING THE POSITION OF THE PIN AND SOCKET CONTACTS.

9. THIS PRODUCT IS QUALIFIED TO TYCO ELECTRONICS SPECIFICATION D-6001 PER TEST REPORT TR3-6540-001.

© 2011-2012 Tyco Electronics. All rights reserved.

Raychem MTC
CUSTOMER DRAWING

| CAD NAME | THIRD ANGLE PROJECTION | SIZE | CAGE CODE: | DWG. NO. | REV |
|---|---|---|---|---|---|
| RD16AXX-XXP/SX | | D | 06090 | RD16AXX-XXP/SX | G |
| RPN: | | SCALE: NONE | | SHEET 2 OF 3 | |

SHEET 2
DWG NO. RD16AXX-XXP/SX

| TABLE V | | |
|---|---|---|
| PART NUMBER | MIS DESCRIPTION | RPN |
| RD16A12–08–SN | MIS–20065/2–001 | 600420N009 |
| RD16A12–08–S6 | MIS–20065/2–002 | 600421N007 |
| RD16A12–08–S7 | MIS–20065/2–003 | 799539–000 |
| RD16A12–08–S8 | MIS–20065/2–004 | 600423N004 |
| RD16A12–08–S9 | MIS–20065/2–005 | N/A |
| RD16A12–08–S10 | MIS–20065/2–006 | N/A |
| | | |
| RD16A14–12–SN | MIS–20065/2–007 | 600426N009 |
| RD16A14–12–S6 | MIS–20065/2–008 | 600427N008 |
| RD16A14–12–S7 | MIS–20065/2–009 | 896901–000 |
| RD16A14–12–S8 | MIS–20065/2–010 | 600429N006 |
| RD16A14–12–S9 | MIS–20065/2–011 | 130711–000 |
| RD16A14–12–S10 | MIS–20065/2–012 | 600431N002 |
| | | |
| RD16A16–19–SN | MIS–20065/2–013 | 600432N009 |
| RD16A16–19–S6 | MIS–20065/2–014 | 600433N007 |
| RD16A16–19–S7 | MIS–20065/2–015 | 600434N004 |
| RD16A16–19–S8 | MIS–20065/2–016 | 600435N002 |
| RD16A16–19–S9 | MIS–20065/2–017 | 600436N003 |
| RD16A16–19–S10 | MIS–20065/2–018 | 600437N003 |
| | | |
| RD16A18–23–SN | MIS–20065/2–019 | 143396–000 |
| RD16A18–23–S6 | MIS–20065/2–020 | 600439N006 |
| RD16A18–23–S7 | MIS–20065/2–021 | 600440N002 |
| RD16A18–23–S8 | MIS–20065/2–022 | 655047–000 |
| RD16A18–23–S9 | MIS–20065/2–023 | 058743–000 |
| RD16A18–23–S10 | MIS–20065/2–024 | N/A |
| | | |
| RD16A20–31–SN | MIS–20065/2–025 | 600444N008 |
| RD16A20–31–S6 | MIS–20065/2–026 | 657683–000 |
| RD16A20–31–S7 | MIS–20065/2–027 | 600446N004 |
| RD16A20–31–S8 | MIS–20065/2–028 | 600447N004 |
| RD16A20–31–S9 | MIS–20065/2–029 | 551309–000 |
| RD16A20–31–S10 | MIS–20065/2–030 | N/A |
| | | |
| RD16A24–51–SN | MIS–20065/2–031 | 600450N009 |
| RD16A24–51–S6 | MIS–20065/2–032 | 600451N008 |
| RD16A24–51–S7 | MIS–20065/2–033 | 600452N007 |
| RD16A24–51–S8 | MIS–20065/2–034 | 600453N007 |
| RD16A24–51–S9 | MIS–20065/2–035 | 600454N007 |
| RD16A24–51–S10 | MIS–20065/2–036 | 654361–000 |

NOTE: ALL CONNECTORS LISTED ON TABLE V ARE MEETING THE REQUIREMENTS OF CS051/2.
PARTS ARE MARKED WITH PART NUMBER AND MIS DESCRIPTION.
THE CS051/2 PORTION OF THE PART NUMBER IDENTIFICATION IS NOT INCLUDED
IN THE PART NUMBER MARKING.

© 2012 Tyco Electronics. All rights reserved.

Raychem MTC
CUSTOMER DRAWING

| CAD NAME | THIRD ANGLE PROJECTION | SIZE | CAGE CODE: | DWG. NO. | REV. |
|---|---|---|---|---|---|
| RD16AXX–XXP/SX | | D | 06090 | RD16AXX–XXP/SX | G |
| RPN: | | SCALE: NONE | | | SHEET 3 OF 3 |

DWG NO. RD16AXX-XXP/SX SHEET 3