THIS DRAWING AND THE INFORMATION SET FORTH HEREON ARE THE PROPERTY OF TYCO ELECTRONICS, AND ARE TO BE HELD IN TRUST AND CONFIDENCE. PUBLICATION, DUPLICATION, DISCLOSURE, OR USE FOR ANY PURPOSE NOT EXPRESSLY UTHORIZED IN WRITING BY TYCO ELECTRONICS IS PROHIBITED.

REVISIONS

LTR	DESCRIPTION		DATE	APPROVED
G	REV PER ECO 13-001461	CT	4-29-13	KH

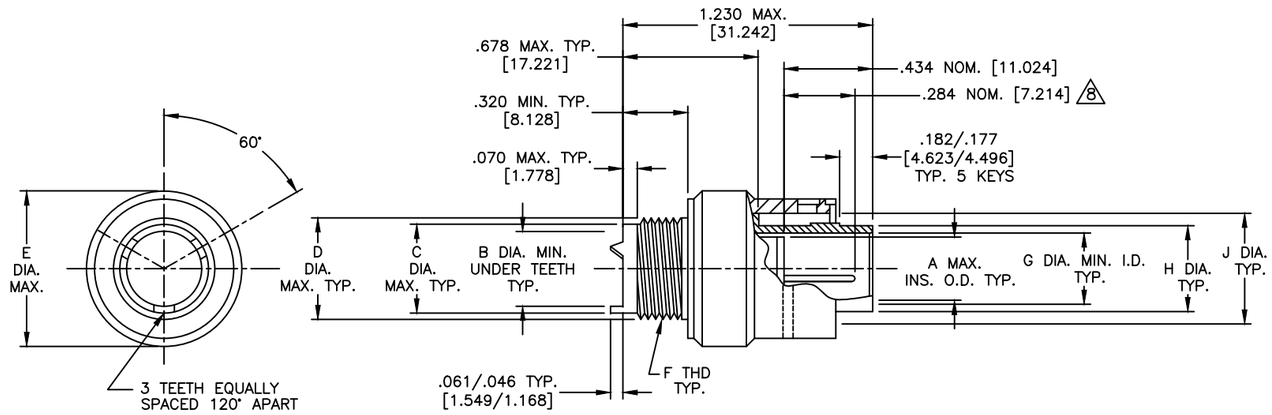

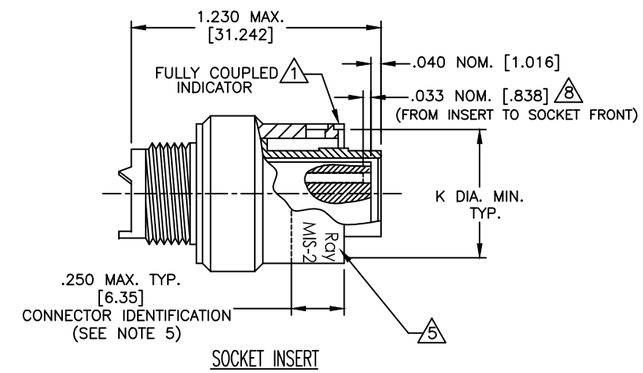

SHELL ALTERNATE KEYING POSITIONS:

IN THE "ALTERNATE KEYING POSITION" (POSITION 6,7,8,9, AND 10), THE KEYS ARE POSITIONED AS INDICATED IN THE CHART BELOW WITH REFERENCE TO MASTER KEY.

WHEN THE ALTERNATE SHELL KEYING POSITIONS ARE USED, THE APPLICABLE INSERT IS ALWAYS IN THE NORMAL POSITION.

KEY / KEYWAY LOCATIONS

TABLE II

KEYING POSITION	SIZE 12 THRU 24			
	A°	B°	C°	D°
NORMAL	105	140	215	265
6	18	149	192	259
7	92	152	222	342
8	84	152	204	334
9	24	135	199	240
10	98	152	268	338

TABLE I

SHELL SIZE	A	B	C	D	E	F	G	H	J	K
12	.558	.613	.687	.750	1.078	3/4-20 UNEF-2A	.598	.696 / .691	.837 / .832	.930
14	.627	.738	.812	.875	1.141	7/8-20 UNEF-2A	.667	.765 / .760	.906 / .901	.999
16	.772	.863	.937	1.000	1.266	1-20 UNEF-2A	.794	.892 / .887	1.033 / 1.028	1.126
18	.860	.919	.992	1.062	1.375	1 1/16-18 UNEF-2A	.900	.998 / .993	1.139 / 1.134	1.232
20	.985	1.044	1.117	1.187	1.510	1 3/16-18 UNEF-2A	1.025	1.123 / 1.118	1.266 / 1.261	1.357
24	1.235	1.294	1.367	1.437	1.760	1 7/16-18 UNEF-2A	1.275	1.373 / 1.368	1.516 / 1.511	1.607

METRIC EQUIVALENT MM

SHELL SIZE	A	B	C	D	E	G	H	J	K
12	14.173	15.570	17.450	19.050	27.381	15.189	17.678 / 17.551	21.260 / 21.133	23.622
14	15.926	18.745	20.625	22.225	28.981	16.942	19.431 / 19.304	23.012 / 22.885	25.375
16	19.609	21.920	23.800	25.400	32.156	20.168	22.657 / 22.530	26.236 / 26.111	28.600
18	21.844	23.343	25.197	26.975	34.925	22.860	25.349 / 25.222	28.931 / 28.804	31.293
20	25.019	26.518	28.372	30.150	38.354	26.035	28.524 / 28.397	32.156 / 32.029	34.468
24	31.369	32.868	34.722	36.500	44.704	32.385	34.874 / 34.747	38.506 / 38.379	40.818

PART NUMBER IDENTIFICATION:

RD1 6 A XX-XX X X-CSXXXX

- CUSTOMER PART NUMBER AS REQUESTED
- KEY POSITION: NORMAL= N (SEE TABLE II) 6 7 8 9 10
- CONTACT STYLE: P = PIN (POWER OR SHIELDED CONTACT SEE TABLE IV); S = SOCKET (POWER OR SHIELDED CONTACT SEE TABLE IV)
- LAYOUT / SHELL SIZE (SEE TABLE I)

SHELL SIZE	NUMBER OF CAVITIES (SEE SHEET 2)
12	08
14	12
16	19
18	23
20	31
24	51

- SHELL PLATING: A - CADMIUM (OPTIONAL G - ELECTROLESS NICKEL)
- SHELL TYPE: 6 - PLUG, R.F.I. GROUNDING
- RAYCHEM CONNECTOR SERIES RD1

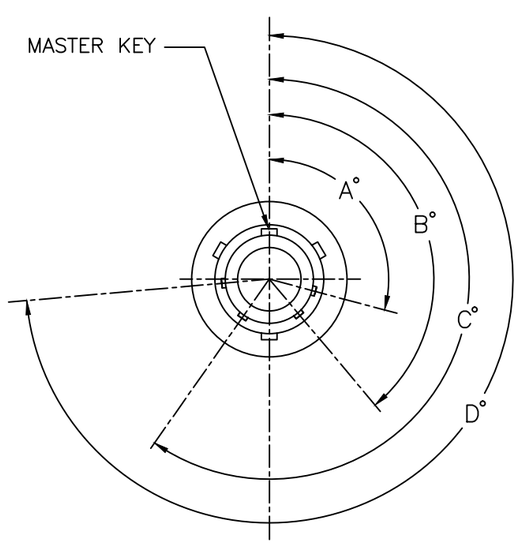

THE FACE OF KEYWAYS FOR PLUG SHELL

TABLE III

PART NUMBER	WEIGHT in Grams Nominal
RD16A-12-08PX	TBD
RD16A-12-08SX	22.94
RD16A-14-12PX	23.25
RD16A-14-12SX	TBD
RD16A-16-19PX	TBD
RD16A-16-19SX	28.74
RD16A-18-23PX	TBD
RD16A-18-23SX	34.03
RD16A-20-31PX	TBD
RD16A-20-31SX	39.74
RD16A-24-51PX	TBD
RD16A-24-51SX	51.29

TABLE IV

CABLE TYPE	PIN	SOCKET
COAX	D-602-44	D-602-45
TWISTED PAIR	D-602-54	D-602-55
PRIMARY WIRE	D-610-09	D-610-10

© 2011-2012 Tyco Electronics. All rights reserved.

Raychem MTC CUSTOMER DRAWING

THIS DRAWING IS A CONTROLLED DOCUMENT.

DIMENSIONING AND TOLERANCING PER ASME Y14.5M (ISO STANDARDS)

THIS DRAWING AND THE INFORMATION SET FORTH HEREON ARE THE PROPERTY OF TYCO ELECTRONICS AND ARE TO BE HELD IN TRUST AND CONFIDENCE. PUBLICATION, DUPLICATION, DISCLOSURE OR USE FOR ANY PURPOSE NOT EXPRESSLY AUTHORIZED IN WRITING BY TYCO ELECTRONICS IS PROHIBITED.

UNLESS OTHERWISE SPECIFIED DIMENSIONS ARE IN INCHES. METRIC DIMENSIONS ARE IN BRACKETS.
DECIMALS
.XXX ± .005 [.127 mm]
.XX ± .01 [.254 mm]
ANGLES 1°

WEIGHT: SEE TABLE III

DRAWN Zsofia O.	DATE Nov/19/2010	TE Connectivity
CHECKED	DATE	
APPROVED M.HIGGY	DATE Nov/19/2010	TITLE RD1 SERIES CONNECTOR PLUG
THIRD ANGLE PROJECTION		
CAD NAME RD16AXX-XXP/SX		
RPN:		

SIZE	CAGE CODE:	DWG. NO.	REV
D	06090	RD16AXX-XXP/SX	G

SCALE: NONE SHEET 1 OF 3

SHEET 1 DWG NO. RD16AXX-XXP/SX

SYM. ABOUT VERTICAL INSERT CENTER LINE ONLY

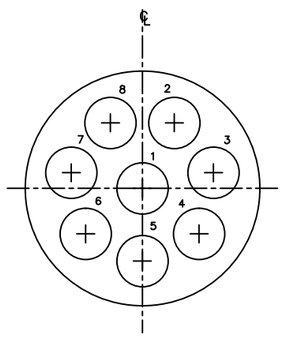

12-08
8 #16 CAVITIES

SYM. ABOUT VERTICAL INSERT CENTER LINE ONLY

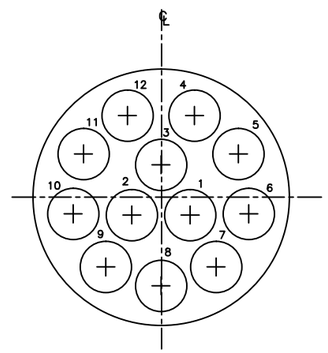

14-12
12 #16 CAVITIES

SYM. ABOUT INSERT CENTER LINE

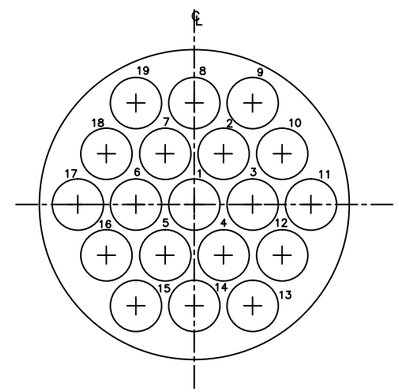

16-19
19 #16 CAVITIES

SYM. ABOUT INSERT CENTER LINE

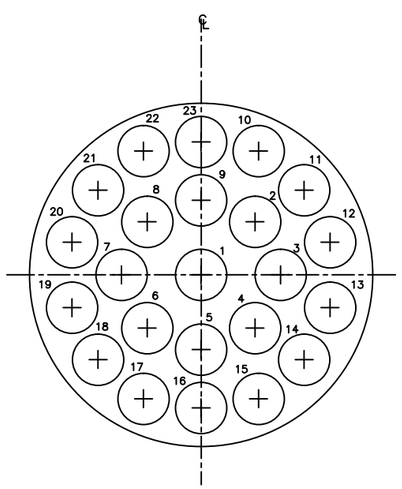

18-23
23 #16 CAVITIES

SYM. ABOUT INSERT CENTER LINE

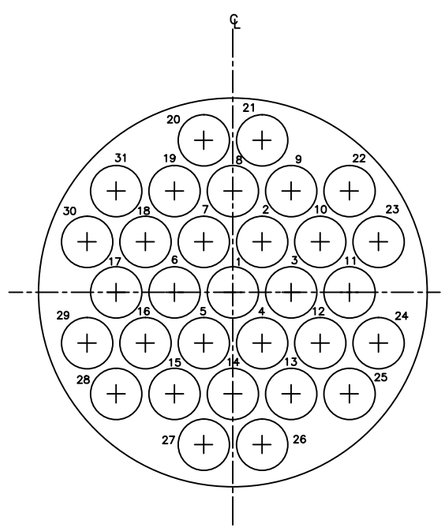

20-31
31 #16 CAVITIES

SYM. ABOUT VERTICAL INSERT CENTER LINE ONLY

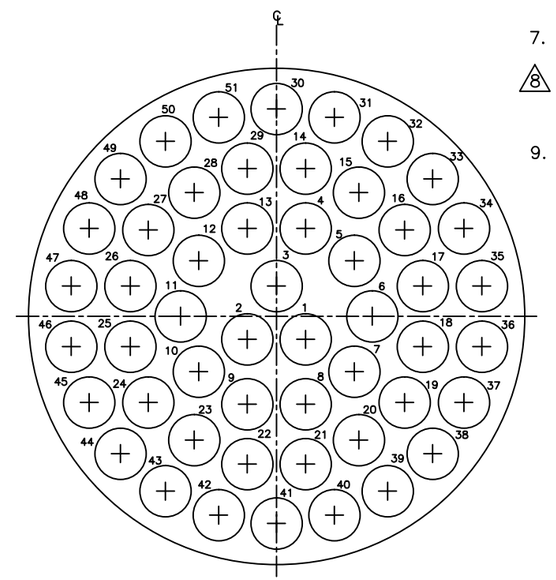

24-51
51 #16 CAVITIES

NOTES:

1. FULLY MATED COUPLING STRIPES SHALL BE COLOR CODED BLUE IN LINE WITH THE BAYONET HOLES ON THE COUPLING PLUG.

2. MATERIAL: METAL PARTS, EXCLUSIVE OF BAYONET PINS, COUPLING RING SPRING AND SNAP RINGS SHALL BE HIGH GRADE ALUMINUM ALLOY CONFORMING TO ASTM B 211 / SAE AMS-QQ-A 225/10. BAYONET PINS AND COUPLING RING SPRING SHALL BE STAINLESS STEEL.

3. INSERT MATERIAL-MINERAL FILLED PHENOLIC PER ASTM-D5948, TYPE MFH

4. SHELL PLATING: CADMIUM PER SAE AMS-QQ-P 416, TYPE II, CLASS 3, .0002/.0005 INCH, OLIVE DRAB, CONDUCTIVE OVER .0002/.0004 INCH ELECTROLESS NICKEL PLATE PER SAE AMS 2404

5. CONNECTOR IDENTIFICATION SHALL CONSIST OF NAME RAYCHEM, TE CONNECTIVITY PART NUMBER, MIS DESCRIPTION (PER TABLE V) AND THE LOT CONTROL NO. OR DATE CODE. ALL CHARACTERS SHALL BE A MINIMUM OF 1/32" IN HEIGHT AND SHALL BE PERMANENTLY AND LEGIBLY MARKED IN LOCATIONS SHOWN. MARKING SHALL BE WITHIN 265° CIRCUMFERENCE. MARKING SHALL BE READ FROM THE MATING FACE UP FOR THE PLUG AND MATING FACE DOWN FOR THE RECEPTACLE.

6. CONTACT IDENTIFICATION IS SHOWN BY LOOKING AT FRONT PIN INSERT FACE.
FRONT SOCKET INSERT FACE IS OPPOSITE.
REAR PIN INSERT FACE IS OPPOSITE.
REAR SOCKET INSERT FACE IS AS SHOWN.

7. ▼ INDICATES SHELL MASTER KEY OR KEYWAY POSITION.

8. THESE DIMENSIONS ARE SHOWING THE POSITION OF THE PIN AND SOCKET CONTACTS.

9. THIS PRODUCT IS QUALIFIED TO TYCO ELECTRONICS SPECIFICATION D-6001 PER TEST REPORT TR3-6540-001.

© 2011-2012 Tyco Electronics. All rights reserved.

Raychem MTC
CUSTOMER DRAWING

CAD NAME	THIRD ANGLE PROJECTION	SIZE	CAGE CODE:	DWG. NO.	REV
RD16AXX-XXP/SX		D	06090	RD16AXX-XXP/SX	G
RPN:		SCALE: NONE		SHEET 2 OF 3	

SHEET 2
DWG NO. RD16AXX-XXP/SX

TABLE V		
PART NUMBER	MIS DESCRIPTION	RPN
RD16A12–08–SN	MIS–20065/2–001	600420N009
RD16A12–08–S6	MIS–20065/2–002	600421N007
RD16A12–08–S7	MIS–20065/2–003	799539–000
RD16A12–08–S8	MIS–20065/2–004	600423N004
RD16A12–08–S9	MIS–20065/2–005	N/A
RD16A12–08–S10	MIS–20065/2–006	N/A
RD16A14–12–SN	MIS–20065/2–007	600426N009
RD16A14–12–S6	MIS–20065/2–008	600427N008
RD16A14–12–S7	MIS–20065/2–009	896901–000
RD16A14–12–S8	MIS–20065/2–010	600429N006
RD16A14–12–S9	MIS–20065/2–011	130711–000
RD16A14–12–S10	MIS–20065/2–012	600431N002
RD16A16–19–SN	MIS–20065/2–013	600432N009
RD16A16–19–S6	MIS–20065/2–014	600433N007
RD16A16–19–S7	MIS–20065/2–015	600434N004
RD16A16–19–S8	MIS–20065/2–016	600435N002
RD16A16–19–S9	MIS–20065/2–017	600436N003
RD16A16–19–S10	MIS–20065/2–018	600437N003
RD16A18–23–SN	MIS–20065/2–019	143396–000
RD16A18–23–S6	MIS–20065/2–020	600439N006
RD16A18–23–S7	MIS–20065/2–021	600440N002
RD16A18–23–S8	MIS–20065/2–022	655047–000
RD16A18–23–S9	MIS–20065/2–023	058743–000
RD16A18–23–S10	MIS–20065/2–024	N/A
RD16A20–31–SN	MIS–20065/2–025	600444N008
RD16A20–31–S6	MIS–20065/2–026	657683–000
RD16A20–31–S7	MIS–20065/2–027	600446N004
RD16A20–31–S8	MIS–20065/2–028	600447N004
RD16A20–31–S9	MIS–20065/2–029	551309–000
RD16A20–31–S10	MIS–20065/2–030	N/A
RD16A24–51–SN	MIS–20065/2–031	600450N009
RD16A24–51–S6	MIS–20065/2–032	600451N008
RD16A24–51–S7	MIS–20065/2–033	600452N007
RD16A24–51–S8	MIS–20065/2–034	600453N007
RD16A24–51–S9	MIS–20065/2–035	600454N007
RD16A24–51–S10	MIS–20065/2–036	654361–000

NOTE: ALL CONNECTORS LISTED ON TABLE V ARE MEETING THE REQUIREMENTS OF CS051/2.
PARTS ARE MARKED WITH PART NUMBER AND MIS DESCRIPTION.
THE CS051/2 PORTION OF THE PART NUMBER IDENTIFICATION IS NOT INCLUDED
IN THE PART NUMBER MARKING.

© 2012 Tyco Electronics. All rights reserved.

Raychem MTC
CUSTOMER DRAWING

CAD NAME	THIRD ANGLE PROJECTION	SIZE	CAGE CODE:	DWG. NO.	REV.
RD16AXX–XXP/SX		D	06090	RD16AXX–XXP/SX	G
RPN:		SCALE: NONE			SHEET 3 OF 3

DWG NO. RD16AXX-XXP/SX SHEET 3