REV.	ECN NO.	DATE	SIGN	DESCRIPTION
B	LEN-7A0182	2007/09/29	Myrdal	Added Note
C	LEN-910181	2009/01/07	Ivan Lin	Change rev. to ECN note
D	C192160	2019-12-21	Peng	△D X1

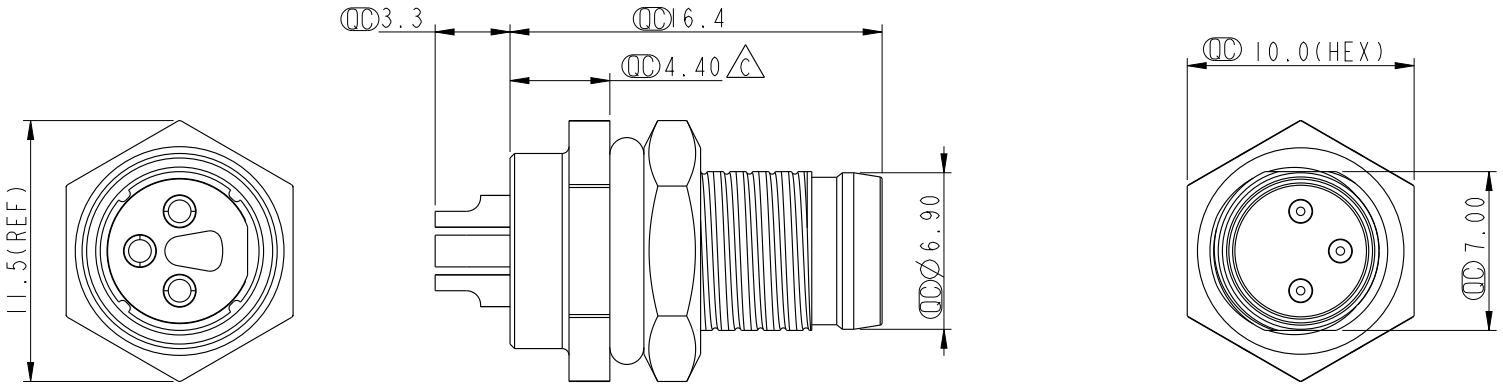

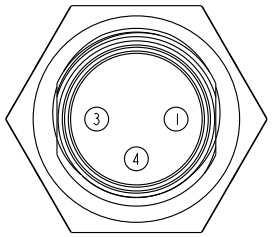

Pin Assignments
Front View

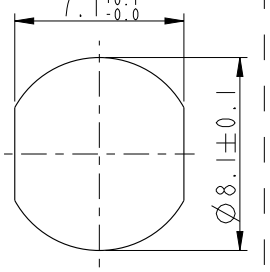

Recommended
Panel Cut-Out

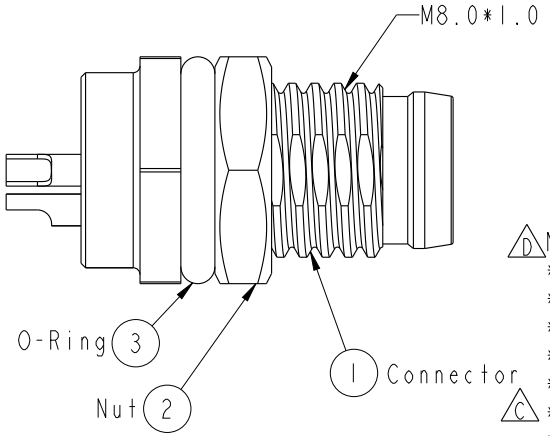

△D Note:
* QC Important Dimension.
* Waterproof Rate: IP67
* Housing: Black, Nylon+GF
* Male Pin: Copper Alloy, Gold Plated
* Shield: Zinc Alloy, Nickel Plated
△C * Nut: Copper Alloy, Nickel Plated
* O-Ring: Black, EPDM
* Panel Thickness For Snap-in Type Max 3.0mm
△B * Panel Thickness For Screw Type Max 1.9mm
* Nut Torque: 4-6 kgf.cm

UNIT: mm

TOLERANCE
.X ±0.25
.XX ±0.1
.XXX ±0.05
ANGLES ±1°

TITLE △C M8 Conn
Panel Screw 3P M Conn M Pin

SCALE 3:1 | SIZE A4 | SHEET 1 OF 1
REV. D | WC-REV. A.3 | QC: Inspection item

Amphenol LTW
安費諾亮泰企業股份有限公司

ITEM NO 8-03PMMS-SF7002	DRAWN BY Ivan Lin	DATE 2009/01/07
DWG NO 8-03PMMS-SF7002	CHECKED BY Tommy Hom	DATE 2009/01/07
CUSTOMER ALTW	APPROVED BY Luke Chang	DATE 2009/01/07

W10814-03-[redacted]01A2

THIS DOCUMENT IS SUBJECT TO CHANGE WITHOUT NOTICE. IT IS CONFIDENTIAL AND A PROPERTY OF Amphenol LTW. DISCLOSURE TO THIRD PARTY HAS TO BE AUTHORIZED BY Amphenol LTW.