REV.	DESCRIPTION	DATE	APPROVED
J	Added SLP3-150-200-R and SLP3-150-300-F	10/11/13	G. W.
K	Added Color Options, Sheet #2	02/02/16	J. C.

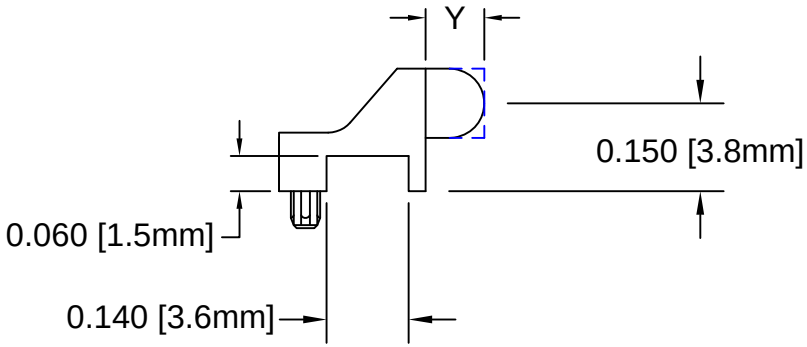

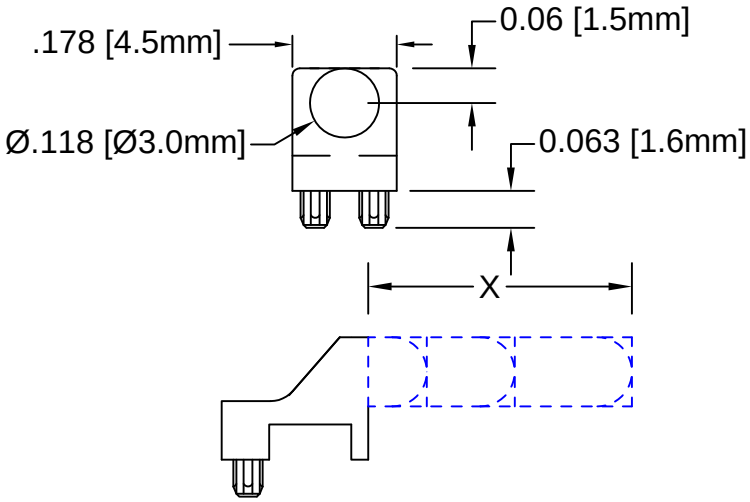

PART NUMBER	Y DIMENSION
SLP3-150-100-F	0.100 [2.54mm] Flat Face
SLP3-150-100-R	0.100 [2.54mm] Round Face
SLP3-150-150-F	0.150 [3.81mm] Flat Face
SLP3-150-150-R	0.150 [3.81mm] Round Face
SLP3-150-200-R	0.200 [5.08mm] Round Face
SLP3-150-250-F	0.250 [6.35mm] Flat Face
SLP3-150-250-R	0.250 [6.35mm] Round Face
SLP3-150-300-F	0.300 [7.62mm] Flat Face
SLP3-150-300-R	0.300 [7.62mm] Round Face
SLP3-150-450-R	0.450 [11.43mm] Round Face

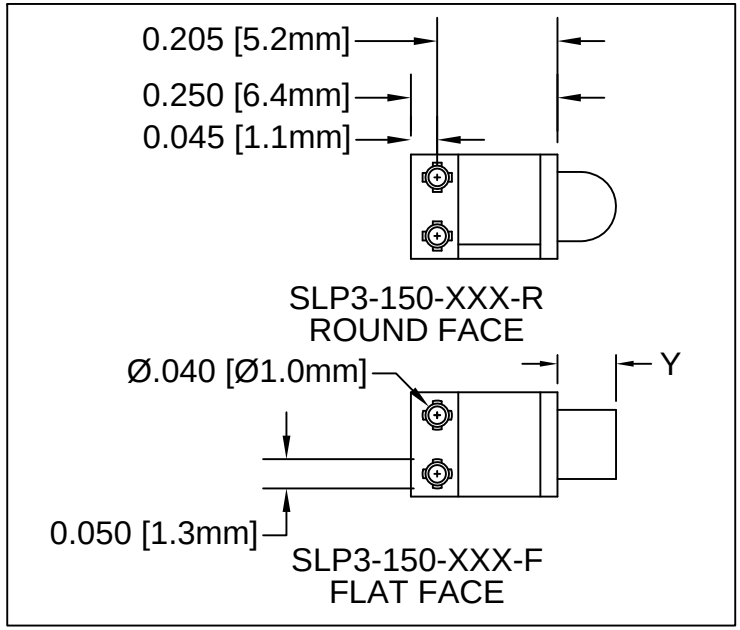

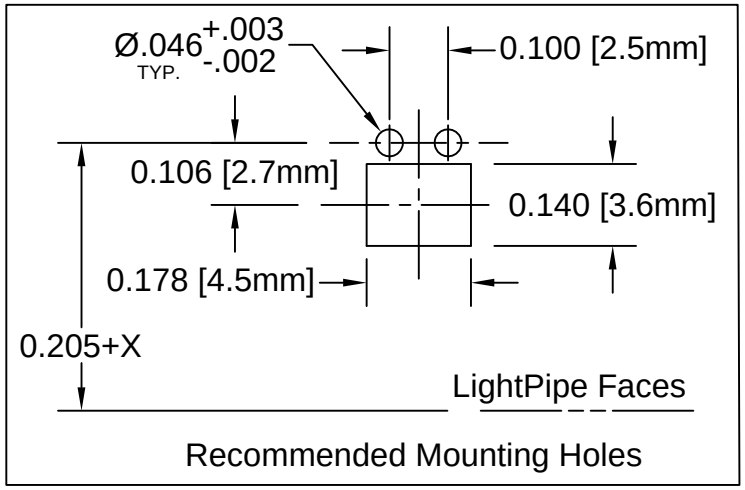

3. ALL DIMENSIONS ARE IN INCHES UNLESS OTHERWISE SPECIFIED
2. MATERIAL: POLYCARBONATE, 94V-0, CLEAR.
1. GENERAL SPECIFICATIONS: BIVAR MOLDED COMPONENT SPECIFICATION BV00-E101.

STANDARD TOLERANCE
(UNLESS OTHERWISE SPECIFIED)

DECIMALS		ANGULAR
.X	± .1	X° ± 1°
.XX	± .01	
.XXX	± .005	

BIVAR®
4 THOMAS, IRVINE, CA. 92618
TEL: (949) 951-8808 FAX: (949) 951-3974

TITLE: LIGHT PIPE 90° VARIABLE CENTERLINE

DESIGNED:	DATE:	PART NO:	REVISION:
Ty Yin	10/17/07	SLP3-150-XXX-X	K
CHECKED: M. Chen	DATE: 10/17/07	CAGE CODE : 32559	SHEET # 1 OF 2

CAD GENERATED DOCUMENT, DO NOT MEASURE DRAWING.

REV.	DESCRIPTION	DATE	APPROVED
	SEE SHEET #1		

OTHER AVAILABLE COLORS

* SEE TABLE FOR ORDERING INFORMATION

SLP3 - 150 - ___ - _ __

- SLP3 — RIGID LIGHT PIPE SERIES
- 150 — VARIABLE CENTER LINE
- ___ — LENS DIMENSION
- _ — FACE TYPE
- __ — COLOR

COLOR	Order Code
BLUE	BE
BLACK	BK
GREEN	GN
GRAY	GY
RED	RD
YELLOW	YW

NOTE: LEAVE ORDER CODE BLANK IF NO COLOR IS DESIRED.

4. PARTS ARE DYED TO COLOR UPON REQUEST.

STANDARD TOLERANCE
(UNLESS OTHERWISE SPECIFIED)
DECIMALS ANGULAR

BIVAR®
4 THOMAS, IRVINE, CA. 92618
TEL: (949) 951-8808 FAX: (949) 951-3974

TITLE: LIGHT PIPE 90° VARIABLE CENTERLINE

DESIGNED:	DATE:	PART NO:	REVISION:
K. Aukshunas	01/25/16	SLP3-150-XXX-X	K
CHECKED: J. Chiang	DATE: 01/25/16	CAGE CODE : 32559	SHEET # 2 OF 2

CAD GENERATED DOCUMENT, DO NOT MEASURE DRAWING.