19-0420; Rev 2; 7/02

10Ω, Quad, SPST, CMOS Analog Switches

General Description

Maxim's MAX312/MAX313/MAX314 analog switches feature low on-resistance (10Ω max) and 1.5Ω on-resistance matching between channels. These switches conduct equally well in either direction. They offer low leakage over temperature (2.5nA at +85°C). Low power consumption and ESD tolerance greater than 2000V per Method 3015.7 are guaranteed.

The MAX312/MAX313/MAX314 are quad, single-pole/single-throw (SPST) analog switches. The MAX312 is normally closed (NC), and the MAX313 is normally open (NO). The MAX314 has two NC switches and two NO switches. All three devices operate from a single supply of +4.5V to +30V or from dual supplies of ±4.5V to ±20V.

Applications

Test Equipment

Communication Systems

PBX, PABX Systems

Audio Signal Routing

Avionics

Sample-and-Hold Circuits

Data Acquisition Systems

Rail-to-Rail is a registered trademark of Nippon Motorola Ltd.

Features

- **Pin Compatible with DG411/DG412/DG413**
- **Low On-Resistance (6.5Ω typical)**
- **Guaranteed R_{ON} Match Between Channels (1.5Ω max)**
- **Guaranteed R_{ON} Flatness over Specified Signal Range (2Ω max)**
- **Guaranteed ESD Protection > 2000V per Method 3015.7**
- **Crosstalk > 96dB at 20kHz**
- **Single-Supply Operation: +4.5V to +30V**
  Dual-Supply Operation: ±4.5V to ±20V
- **Rail-to-Rail® Signal Handling**

Ordering Information

PART	TEMP RANGE	PIN-PACKAGE
MAX312CPE	0°C to +70°C	16 Plastic DIP
MAX312CSE	0°C to +70°C	16 Narrow SO
MAX312CUE	0°C to +70°C	16 TSSOP
MAX312C/D	0°C to +70°C	Dice*
MAX312EPE	-40°C to +85°C	16 Plastic DIP
MAX312ESE	-40°C to +85°C	16 Narrow SO
MAX312EUE	-40°C to +85°C	16 TSSOP
MAX312MJE	-55°C to +125°C	16 CERDIP**

Ordering Information continued at end of data sheet.

** Contact factory for dice specifications.*

***Contact factory for availability.*

Pin Configurations/Functional Diagrams/Truth Tables

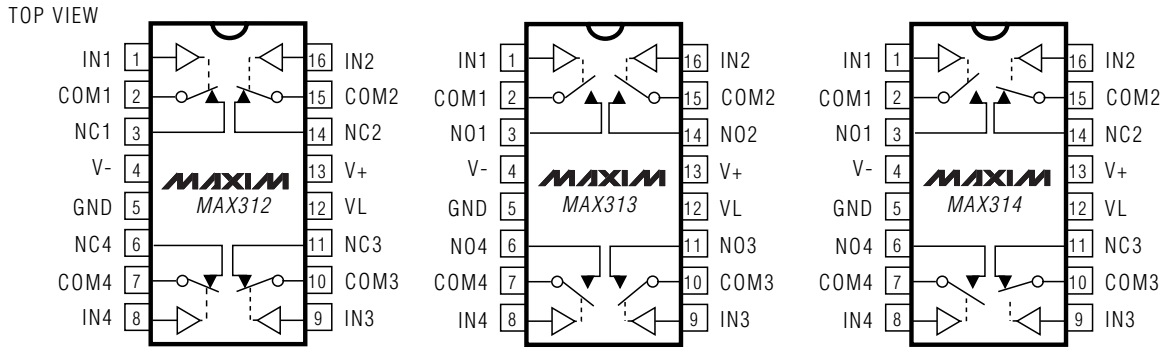

DIP/SO/TSSOP **DIP/SO/TSSOP** **DIP/SO/TSSOP**

SO/MAX312	
LOGIC	SWITCH
0	ON
1	OFF

MAX313	
LOGIC	SWITCH
0	OFF
1	ON

MAX314		
LOGIC	SWITCHES 1, 4	SWITCHES 2, 3
0	OFF	ON
1	ON	OFF

SWITCHES SHOWN FOR LOGIC "0" INPUT

For pricing, delivery, and ordering information, please contact Maxim/Dallas Direct! at 1-888-629-4642, or visit Maxim's website at www.maxim-ic.com.

10Ω, Quad, SPST, CMOS Analog Switches

ABSOLUTE MAXIMUM RATINGS

Voltages Referenced to GND
V+ .....-0.3V to +44V
V- .....+0.3V to -44V
V+ to V-.....-0.3V to +44V
VL .....(GND - 0.3V) to (V+ + 0.3V)
All Other Pins (Note 1).....(V- - 2V) to (V+ + 2V)
or 30mA (whichever occurs first)
Continuous Current (COM_, NO_, NC_).....±100mA
Peak Current (COM_, NO_, NC_).....±300mA

Continuous Power Dissipation (T_A = +70°C)
Plastic DIP (derate 10.53mW/°C above +70°C) 842mW
Narrow SO (derate 8.70mW/°C above +70°C) 696mW
CERDIP (derate 10.00mW/°C above +70°C).....800mW
TSSOP (derate 6.7mW/°C above +70°C) 457mW
Operating Temperature Ranges
MAX31_C_ .....0°C to +70°C
MAX31_E_ .....-40°C to +85°C
MAX31_M_.....-55°C to +125°C
Storage Temperature Range .....-65°C to +150°C
Lead Temperature (soldering, 10s) .....+300°C

Stresses beyond those listed under "Absolute Maximum Ratings" may cause permanent damage to the device. These are stress ratings only, and functional operation of the device at these or any other conditions beyond those indicated in the operational sections of the specifications is not implied. Exposure to absolute maximum rating conditions for extended periods may affect device reliability.

Note 1: Signals on NC_, NO_, COM_, or IN_ exceeding V+ or V- will be clamped by internal diodes. Limit forward diode current to maximum current rating.

ELECTRICAL CHARACTERISTICS—Dual Supplies

(V+ = 15V, V- = -15V, VL = 5V, GND = 0V, V_{INH} = 2.4V, V_{INL} = 0.8V, T_A = T_{MIN} to T_{MAX}, unless otherwise noted.)

PARAMETER	SYMBOL	CONDITIONS			MIN	TYP (Note 2)	MAX	UNITS
ANALOG SWITCH								
Analog Signal Range	$V_{COM_}$, $V_{NO_}$, $V_{NC_}$	(Note 3)			V-		V+	V
On-Resistance	R_{ON}	I_{COM} = 10mA, $V_{NO_}$ or $V_{NC_}$ = ±10V	T_A = +25°C	C, E		6.5	10	Ω
				M			9	
			T_A = T_{MIN} to T_{MAX}				15	
On-Resistance Match Between Channels (Note 4)	ΔR_{ON}	I_{COM} = 10mA, $V_{NO_}$ or $V_{NC_}$ = ±10V	T_A = +25°C			0.3	1.5	Ω
			T_A = T_{MIN} to T_{MAX}				3	
On-Resistance Flatness (Note 5)	$R_{FLAT(ON)}$	I_{COM} = 10mA, $V_{NO_}$ or $V_{NC_}$ = -5V, 0V, 5V	T_A = +25°C			0.2	2	Ω
			T_A = T_{MIN} to T_{MAX}				4	
Off Leakage Current (NO_ or NC_) (Note 6)	I_{NO} I_{NC}	V_{COM} = ±10V, $V_{NO_}$ or $V_{NC_}$ = ±10V	T_A = +25°C		-0.5	-0.02	0.5	nA
			T_A = T_{MIN} to T_{MAX}	C, E	-2.5		2.5	
				M	-40		40	
COM Off Leakage Current (Note 6)	$I_{NC(OFF)}$	V_{COM} = ±10V, $V_{NO_}$ or $V_{NC_}$ = ±10V	T_A = +25°C		-0.5	-0.02	0.5	nA
			T_A = T_{MIN} to T_{MAX}	C, E	-2.5		2.5	
				M	-40		40	
COM On Leakage Current (Note 6)	$I_{COM(ON)}$	V_{COM} = ±10V, $V_{NO_}$ or $V_{NC_}$ = ±10V	T_A = +25°C		-1	-0.04	1	nA
			T_A = T_{MIN} to T_{MAX}	C, E	-5		5	
				M	-100		100	

ELECTRICAL CHARACTERISTICS—Dual Supplies (continued)

($V+$ = 15V, $V-$ = -15V, VL = 5V, GND = 0V, V_{INH} = 2.4V, V_{INL} = 0.8V, $T_A = T_{MIN}$ to T_{MAX}, unless otherwise noted.)

PARAMETER	SYMBOL	CONDITIONS		MIN	TYP (Note 2)	MAX	UNITS
LOGIC INPUT							
Input Current with Input Voltage High	I_{INH}	IN_ = 2.4V, all others = 0.8V		-0.500	0.005	0.500	µA
Input Current with Input Voltage Low	I_{INL}	IN_ = 0.8V, all others = 2.4V		-0.500	0.005	0.500	µA
POWER SUPPLY							
Power-Supply Range				±4.5		±20.0	V
Positive Supply Current	I+	All channels on or off, V_{IN} = 0V or 5V, V+ = 16.5V V- = -16.5V	T_A = +25°C	-1	0.0001	1	µA
			$T_A = T_{MIN}$ to T_{MAX}	-5		5	
Negative Supply Current	I-	All channels on or off, V_{IN} = 0V or 5V, V+ = 16.5V V- = -16.5V	T_A = +25°C	-1	0.0001	1	µA
			$T_A = T_{MIN}$ to T_{MAX}	-5		5	
Logic Supply Current	I_L	All channels on or off, V_{IN} = 0V or 5V, V+ = 16.5V V- = -16.5V	T_A = +25°C	-1	0.0001	1	µA
			$T_A = T_{MIN}$ to T_{MAX}	-5		5	
Ground Current	I_{GND}	All channels on or off, V_{IN} = 0V or 5V, V+ = 16.5V V- = -16.5V	T_A = +25°C	-1	-0.0001	1	µA
			$T_A = T_{MIN}$ to T_{MAX}	-5		5	
DYNAMIC							
Turn-On Time	t_{ON}	Figure 2, V_{COM} = ±10V	T_A = +25°C		70	225	ns
			$T_A = T_{MIN}$ to T_{MAX}			275	
Turn-Off Time	t_{OFF}	Figure 2, V_{COM} = ±10V	T_A = +25°C		65	185	ns
			$T_A = T_{MIN}$ to T_{MAX}			235	
Break-Before-Make Time Delay	t_D	MAX314 only, Figure 3, R_L = 300Ω, C_L = 35pF	T_A = +25°C	1	5		ns
Charge Injection (Note 3)	V_{CTE}	C_L = 1.0nF V_{GEN} = 0V, R_{GEN} = 0Ω, Figure 4	T_A = +25°C	-30	20	30	pC
Off Isolation (Note 7)	V_{ISO}	R_L = 50Ω, C_L = 5pF, f = 1MHz, Figure 5	T_A = +25°C		-65		dB
Crosstalk (Note 8)	V_{CT}	R_L = 50Ω, C_L = 5pF, f = 1MHz, Figure 6	T_A = +25°C		-85		dB
NC or NO Capacitance	$C_{(OFF)}$	f = 1MHz, Figure 7	T_A = +25°C		15		pF
COM Off Capacitance	$C_{(COM)}$	f = 1MHz, Figure 7	T_A = +25°C		15		pF
On Capacitance	$C_{(COM)}$	f = 1MHz, Figure 7	T_A = +25°C		47		pF

ELECTRICAL CHARACTERISTICS—Single Supply

(V+ = 12V, V- = 0V, VL = 5V, GND = 0V, V_{INH} = 2.4V, V_{INL} = 0.8V, T_A = T_{MIN} to T_{MAX}, unless otherwise noted.)

PARAMETER	SYMBOL	CONDITIONS		MIN	TYP (Note 2)	MAX	UNITS
ANALOG SWITCH							
Analog Signal Range	$V_{COM_}$, $V_{NO_}$, $V_{NC_}$	(Note 3)		0		V+	V
Channel On-Resistance	R_{ON}	I_{COM} = 10mA, $V_{NC_}$ or $V_{NO_}$ +10V	T_A = +25°C		12.5	25	Ω
			T_A = T_{MIN} to T_{MAX}			35	
POWER SUPPLY							
Positive Supply Current	I+	V+ = 13.2V all channels on or off, V_{IN} = 0V or 5V	T_A = +25°C	-1	0.0001	1	µA
			T_A = T_{MAX}	-5		5	
Logic Supply Current	I_L	V_L = 5.5V all channels on or off, V_{IN} = 0V or 5V	T_A = +25°C	-1	0.0001	1	µA
			T_A = T_{MAX}	-5		5	
Ground Current	I_{GND}	V_L = 5.5V all channels on or off, V_{IN} = 0V or 5V	T_A = +25°C	-1	-0.0001	1	µA
			T_A = T_{MAX}	-5		5	
DYNAMIC							
Turn-On Time (Note 3)	t_{ON}	Figure 2, $V_{NO_}$ or $V_{NC_}$ = 8V	T_A = +25°C		100	325	ns
			T_A = T_{MIN} to T_{MAX}			425	
Turn-Off Time (Note 3)	t_{OFF}	Figure 2, $V_{NO_}$ or $V_{NC_}$ = 8V	T_A = +25°C		95	175	ns
			T_A = T_{MIN} to T_{MAX}			225	
Break-Before-Make Time Delay (Note 3)	t_D	MAX314 only, Figure 3 R_L = 300Ω, C_L = 35pF	T_A = +25°C		5		ns
Charge Injection (Note 3)	V_{CTE}	Figure 4, C_L = 1.0nF, V_{GEN} = 0V, R_{GEN} = 0V	T_A = +25°C		-5		pC

Note 2: The algebraic convention, where the most negative value is a minimum and the most positive value a maximum, is used in this data sheet.
Note 3: Guaranteed by design.
Note 4: ΔR_{ON} = ΔR_{ON} max - ΔR_{ON} min.
Note 5: Flatness is defined as the difference between the maximum and minimum value of on-resistance as measured over the specified analog signal range.
Note 6: Leakage parameters are 100% tested at maximum-rated hot temperature and guaranteed by correlation at +25°C.
Note 7: Off isolation = $20\log_{10}$ [V_{COM} / (V_{NC} or V_{NO})], V_{COM} = output, V_{NC} or V_{NO} = input to off switch.
Note 8: Between any two switches.
Note 9: Leakage testing at single supply is guaranteed by testing with dual supplies.

Typical Operating Characteristics

(T_A = +25°C, unless otherwise noted.)

ON-RESISTANCE vs. V_{COM} (BIPOLAR SUPPLIES)

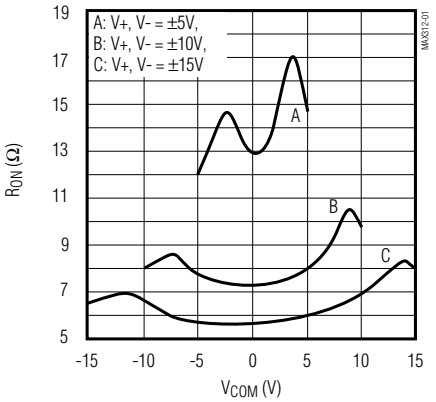

ON-RESISTANCE vs. V_{COM} AND TEMPERATURE

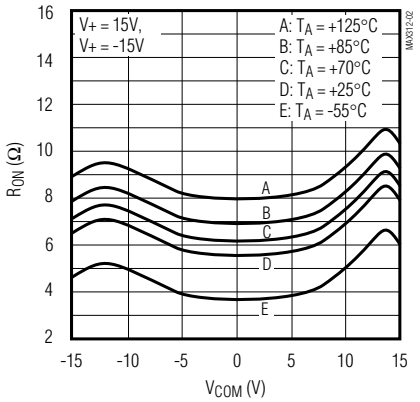

ON-RESISTANCE vs. V_{COM} (SINGLE SUPPLY, V- = 0V)

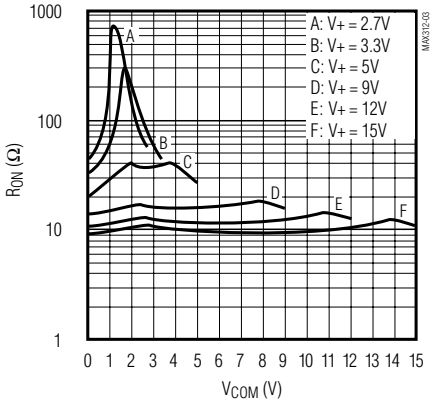

ON-RESISTANCE vs. V_{COM} AND TEMPERATURE

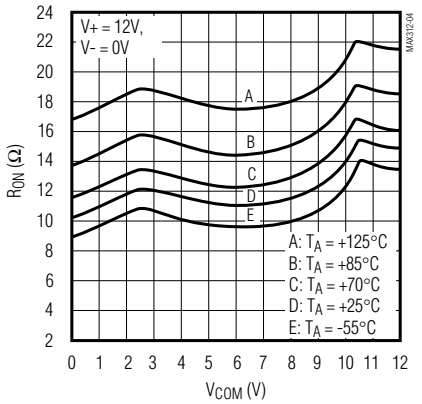

OFF LEAKAGE CURRENT vs. TEMPERATURE

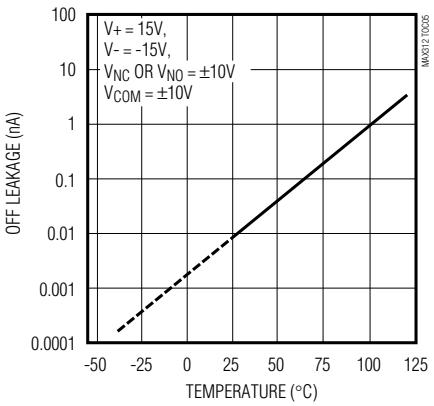

ON LEAKAGE CURRENT vs. TEMPERATURE

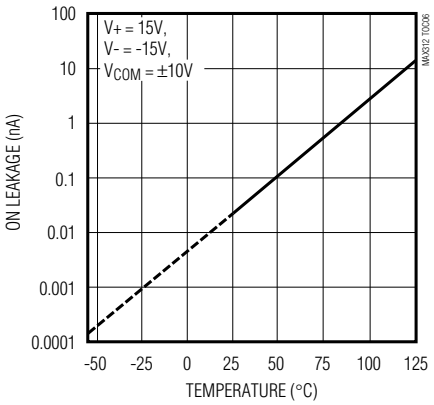

CHARGE INJECTION vs. V_{COM}

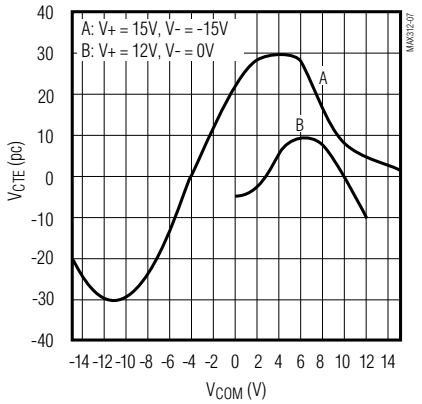

SUPPLY CURRENT vs. TEMPERATURE

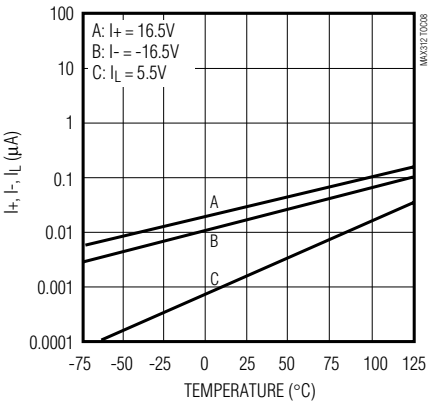

10Ω, Quad, SPST, CMOS Analog Switches

Typical Operating Characteristics (continued)

(T_A = +25°C, unless otherwise noted.)

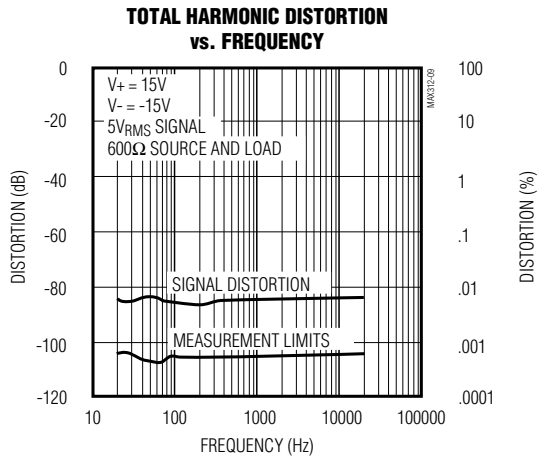

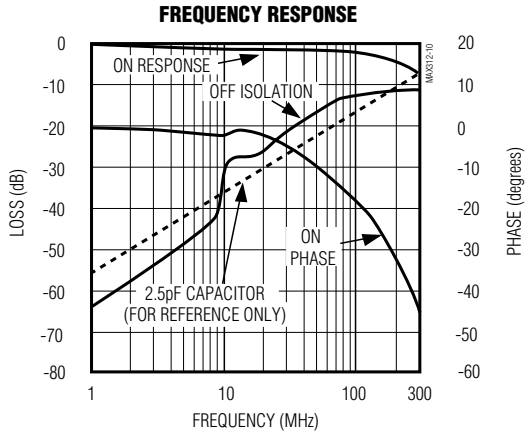

Pin Description

PIN			NAME	FUNCTION
MAX312	MAX313	MAX314		
1, 8, 9, 16	1, 8, 9, 16	1, 8, 9, 16	IN2, IN4, IN3, IN2	Logic Level Inputs
2, 7, 10, 15	2, 7, 10, 15	2, 7, 10, 15	COM1, COM4, COM3, COM2	Analog Signal Common Terminals
3, 6, 11, 14	—	—	NC1, NC4, NC3, NC2	Analog Signal Normally Closed Terminals
—	3, 6, 11, 14	—	NO1, NO4, NO3, NO2	Analog Signal Normally Open Terminals
—	—	3, 6	NO1, NO4	Analog Signal Normally Open Terminals
—	—	11, 14	NC3, NC2	Analog Signal Normally Closed Terminals
4	4	4	V-	Negative Analog Supply Input (connect to GND for single-supply operation)
5	5	5	GND	Logic Level Ground
12	12	12	VL	Logic Supply Voltage
13	13	13	V+	Positive Analog Supply Input

Applications Information

Low-Distortion Audio

The MAX312/MAX313/MAX314, having very low R_{ON} and very low R_{ON} variation with signal amplitude, are well suited for low-distortion audio applications. The *Typical Operating Characteristics* show Total Harmonic Distortion (THD) vs. Frequency graphs for several signal amplitudes and impedances. Higher source and load impedances improve THD, but reduce off isolation.

Off Isolation at High Frequencies

In 50Ω systems, the high-frequency on-response of these parts extends from DC to above 100MHz with a typical loss of -2dB. When the switch is turned off, however, it behaves like a capacitor, and off isolation decreases with increasing frequency. (Above 300MHz, the switch actually passes more signal turned off than turned on.) This effect is more pronounced with higher source and load impedances.

Above 5MHz, circuit board layout becomes critical, and it becomes difficult to characterize the response of the switch independent of the circuit. The graphs shown in the *Typical Operating Characteristics* were taken using a 50Ω source and load connected with BNC connectors to a circuit board deemed "average"; that is, designed with isolation in mind, but not using strip-line or other special RF circuit techniques. For critical applications above 5MHz, use the MAX440, MAX441, and MAX442, which are fully characterized up to 160MHz.

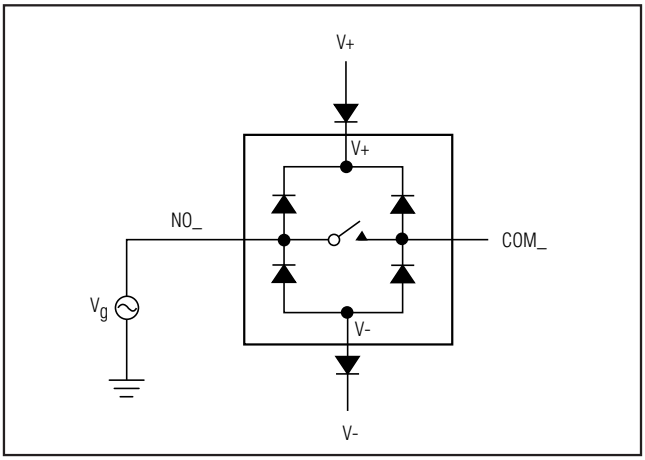

Figure 1. Overvoltage Protection Using External Blocking Diodes

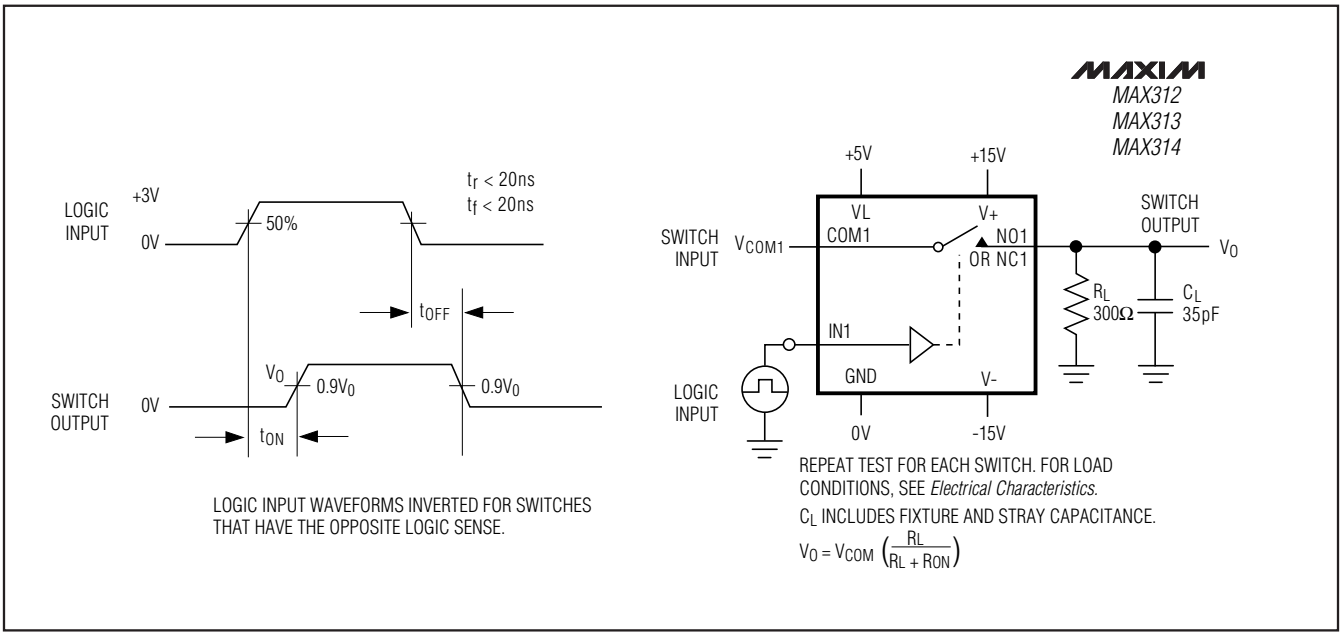

Figure 2. Switching-Time Test Circuit

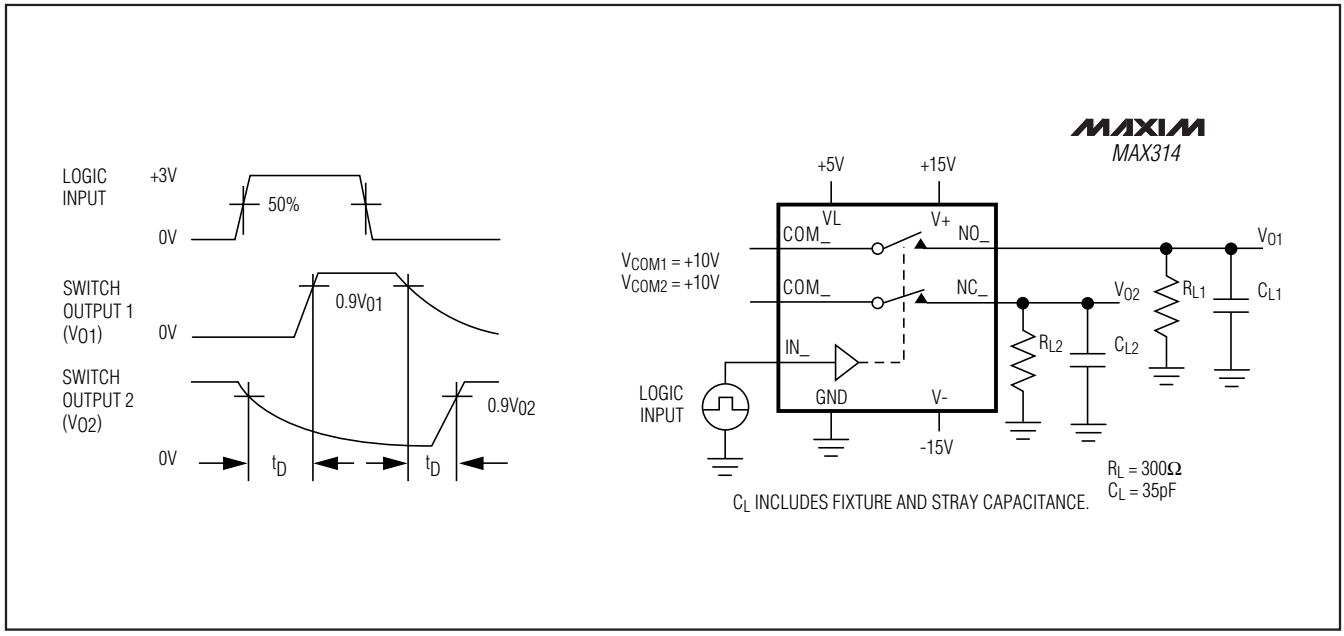

Figure 3. Break-Before-Make Test Circuit (MAX314 only)

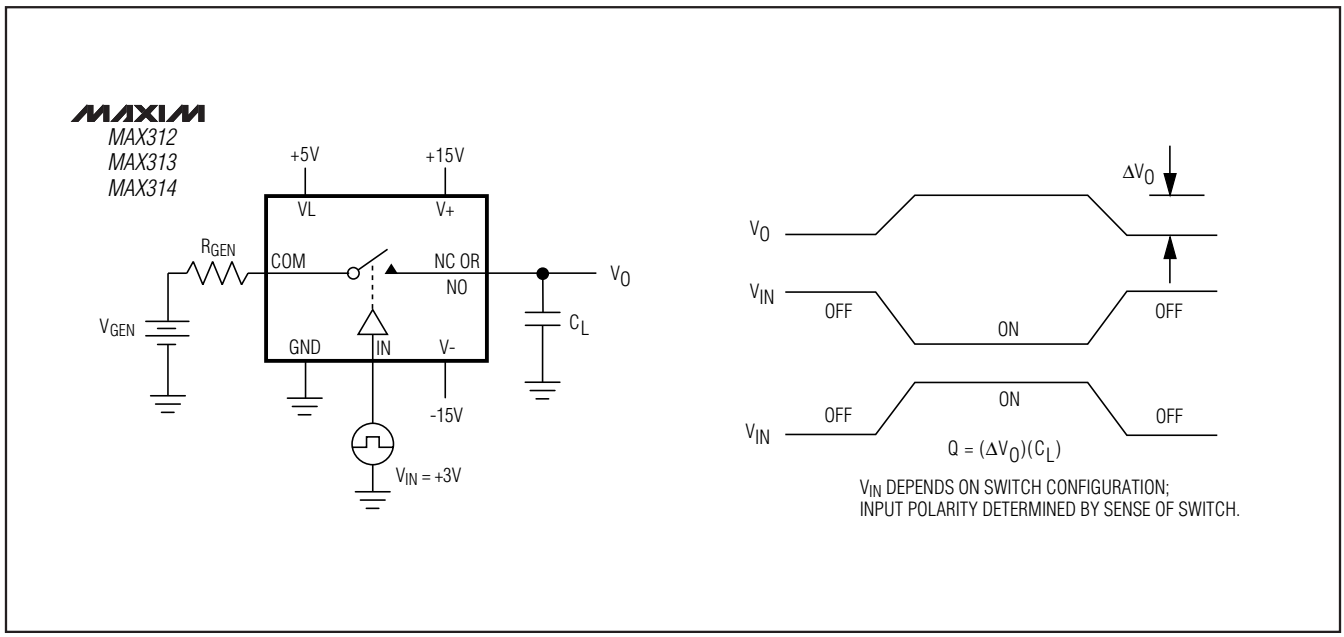

Figure 4. Charge Injection Test Circuit

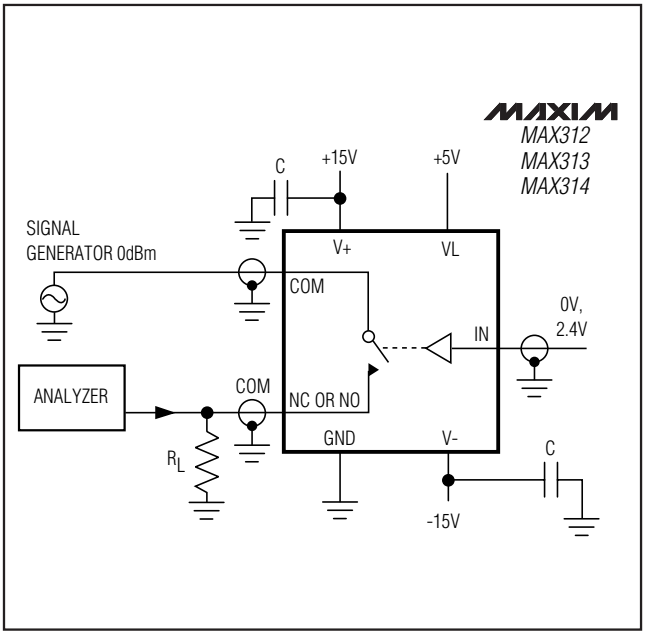

Figure 5. Off-Isolation Test Circuit

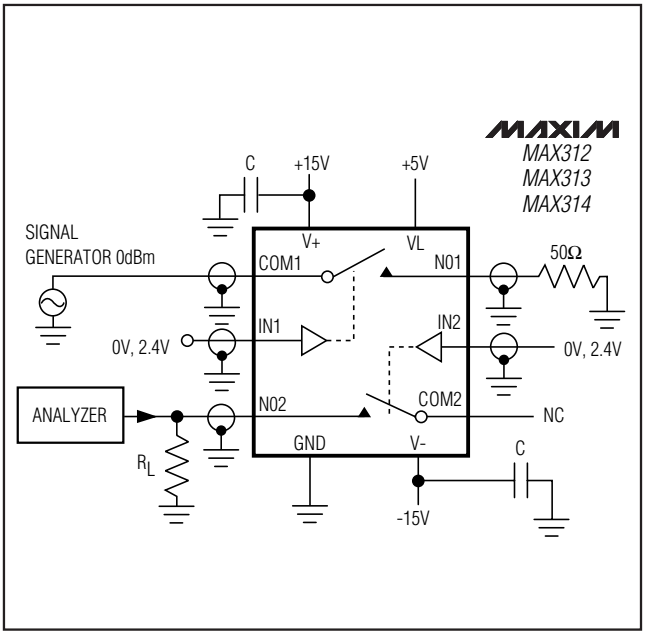

Figure 6. Crosstalk Test Circuit

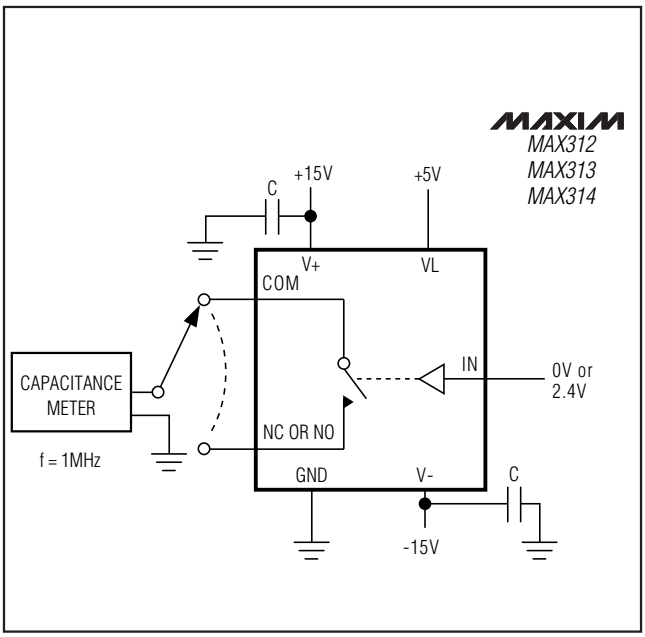

Figure 7. Channel-Off Capacitance Test Circuit

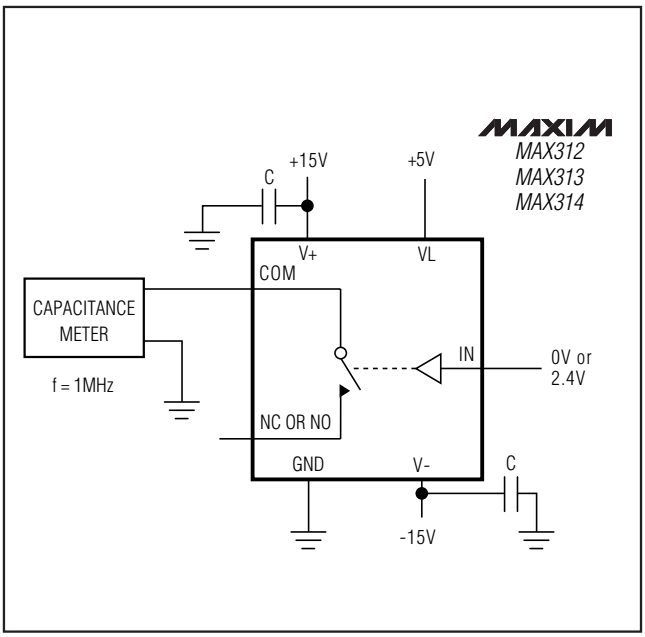

Figure 8. Channel-On Capacitance Test Circuit

10Ω, Quad, SPST, CMOS Analog Switches

Ordering Information (continued)

PART	TEMP. RANGE	PIN-PACKAGE
MAX313CPE	0°C to +70°C	16 Plastic DIP
MAX313CSE	0°C to +70°C	16 Narrow SO
MAX313CUE	0°C to +70°C	16 TSSOP
MAX313C/D	0°C to +70°C	Dice*
MAX313EPE	-40°C to +85°C	16 Plastic DIP
MAX313ESE	-40°C to +85°C	16 Narrow SO
MAX313EUE	-40°C to +85°C	16 TSSOP
MAX313MJE	-55°C to +125°C	16 CERDIP**
MAX314CPE	0°C to +70°C	16 Plastic DIP
MAX314CSE	0°C to +70°C	16 Narrow SO
MAX314CUE	0°C to +70°C	16 TSSOP
MAX314C/D	0°C to +70°C	Dice*
MAX314EPE	-40°C to +85°C	16 Plastic DIP
MAX314ESE	-40°C to +85°C	16 Narrow SO
MAX314EUE	-40°C to +85°C	16 TSSOP
MAX314MJE	-55°C to +125°C	16 CERDIP**

** Contact factory for dice specifications.*
***Contact factory for availability.*

Chip Topography

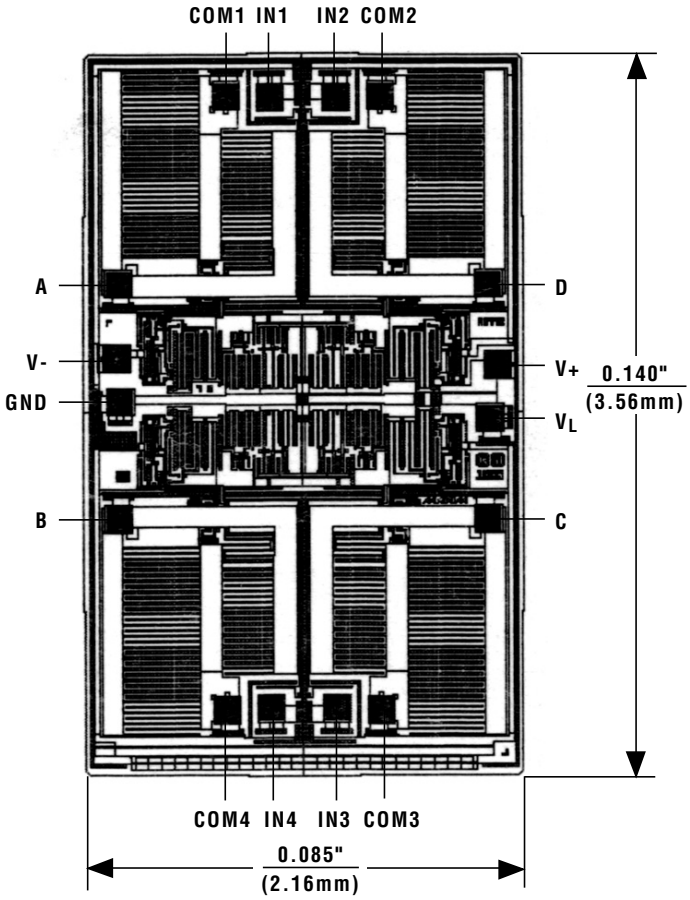

MAX312		MAX313		MAX314	
PIN	NAME	PIN	NAME	PIN	NAME
A	NC1	A	NO1	A	NO1
B	NC4	B	NO4	B	NO4
C	NC3	C	NO3	C	NC3
D	NC2	D	NO2	D	NC2

TRANSISTOR COUNT: 100
SUBSTRATE CONNECTED TO V+

Package Information

(The package drawing(s) in this data sheet may not reflect the most current specifications. For the latest package outline information, go to **www.maxim-ic.com/packages**.)

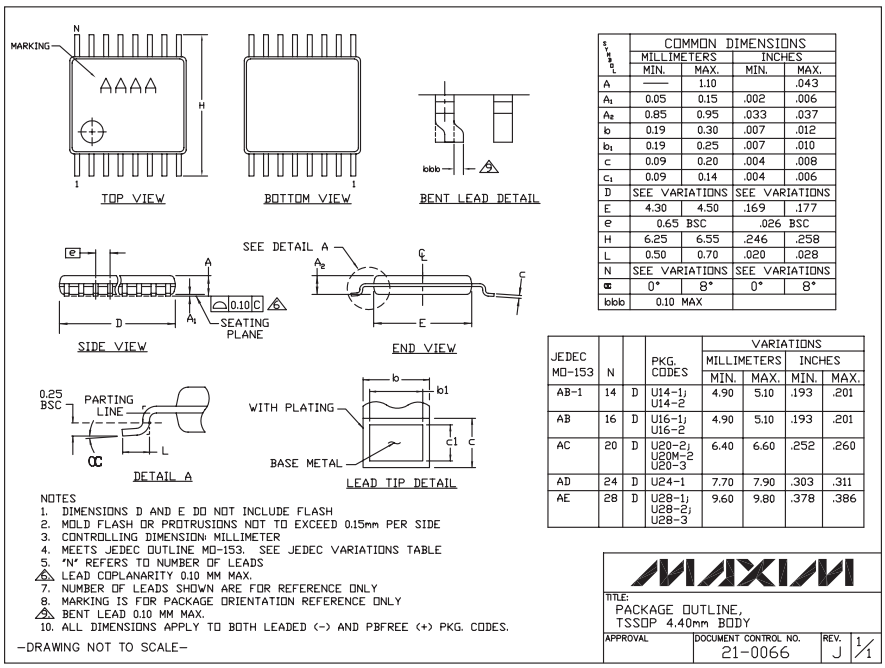

SYMBOL	COMMON DIMENSIONS			
	MILLIMETERS		INCHES	
	MIN.	MAX.	MIN.	MAX.
A	——	1.10		.043
A_1	0.05	0.15	.002	.006
A_2	0.85	0.95	.033	.037
b	0.19	0.30	.007	.012
b_1	0.19	0.25	.007	.010
c	0.09	0.20	.004	.008
c_1	0.09	0.14	.004	.006
D	SEE VARIATIONS		SEE VARIATIONS	
E	4.30	4.50	.169	.177
e	0.65 BSC		.026 BSC	
H	6.25	6.55	.246	.258
L	0.50	0.70	.020	.028
N	SEE VARIATIONS		SEE VARIATIONS	
α	0°	8°	0°	8°
aaa	0.10 MAX			

JEDEC MO-153	N		PKG. CODES	VARIATIONS			
				MILLIMETERS		INCHES	
				MIN.	MAX.	MIN.	MAX.
AB-1	14	D	U14-1; U14-2	4.90	5.10	.193	.201
AB	16	D	U16-1; U16-2	4.90	5.10	.193	.201
AC	20	D	U20-2; U20M-2 U20-3	6.40	6.60	.252	.260
AD	24	D	U24-1	7.70	7.90	.303	.311
AE	28	D	U28-1; U28-2; U28-3	9.60	9.80	.378	.386

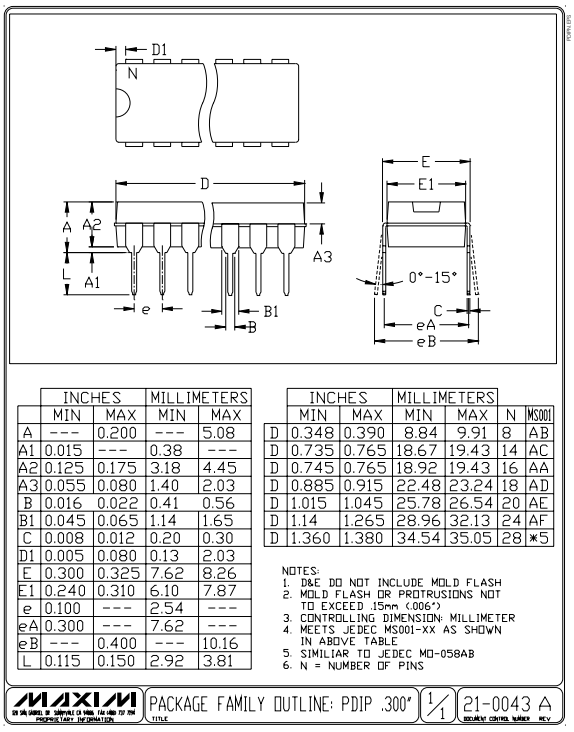

	INCHES		MILLIMETERS	
	MIN	MAX	MIN	MAX
A	---	0.200	---	5.08
A1	0.015	---	0.38	---
A2	0.125	0.175	3.18	4.45
A3	0.055	0.080	1.40	2.03
B	0.016	0.022	0.41	0.56
B1	0.045	0.065	1.14	1.65
C	0.008	0.012	0.20	0.30
D1	0.005	0.080	0.13	2.03
E	0.300	0.325	7.62	8.26
E1	0.240	0.310	6.10	7.87
e	0.100	---	2.54	---
eA	0.300	---	7.62	---
eB	---	0.400	---	10.16
L	0.115	0.150	2.92	3.81

	INCHES		MILLIMETERS			
	MIN	MAX	MIN	MAX	N	MS001
D	0.348	0.390	8.84	9.91	8	AB
D	0.735	0.765	18.67	19.43	14	AC
D	0.745	0.765	18.92	19.43	16	AA
D	0.885	0.915	22.48	23.24	18	AD
D	1.015	1.045	25.78	26.54	20	AE
D	1.14	1.265	28.96	32.13	24	AF
D	1.360	1.380	34.54	35.05	28	*5

10Ω, Quad, SPST, CMOS Analog Switches

Package Information (continued)

(The package drawing(s) in this data sheet may not reflect the most current specifications. For the latest package outline information, go to **www.maxim-ic.com/packages**.)

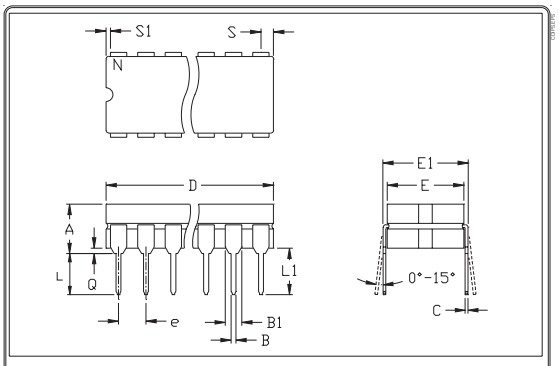

	INCHES		MILLIMETERS	
	MIN	MAX	MIN	MAX
A	---	0.200	---	5.08
B	0.014	0.023	0.36	0.58
B1	0.038	0.065	0.97	1.65
C	0.008	0.015	0.20	0.38
E	0.220	0.310	5.59	7.87
E1	0.290	0.320	7.37	8.13
e	0.100		2.54	
L	0.125	0.200	3.18	5.08
L1	0.150	---	0.00	---
Q	0.015	0.070	0.38	1.78
S	---	0.098	---	2.49
S1	0.005	---	0.13	---

	INCHES		MILLIMETERS			
	MIN	MAX	MIN	MAX	N	CASE
D	---	0.405	---	10.29	8	P:D4
D	---	0.785	---	19.94	14	C:D1
D	---	0.840	---	21.34	16	E:D2
D	---	0.960	---	24.38	18	V:D6
D	---	1.060	---	26.92	20	R:D8
D	---	1.280	---	32.51	24	L:D9

NOTES:
1. CONTROLLING DIMENSION: INCH
2. MEETS 1835 CASE OUTLINE CONFIGURATION #1 AS SHOWN IN ABOVE TABLE
3. N = NUMBER OF PINS

MAXIM | PACKAGE FAMILY OUTLINE: CDIP .300" | 1/1 | 21-0045 A

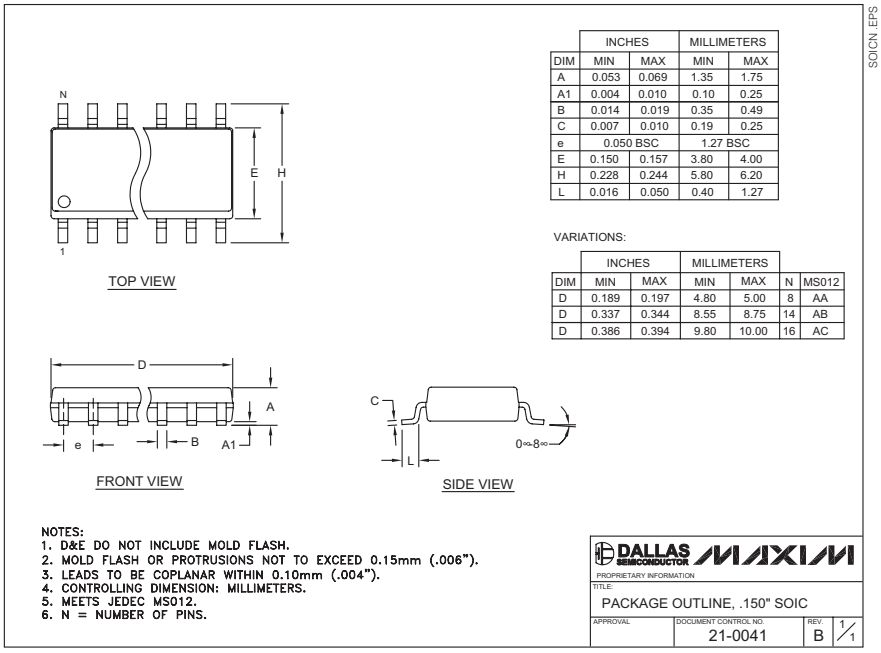

	INCHES		MILLIMETERS	
DIM	MIN	MAX	MIN	MAX
A	0.053	0.069	1.35	1.75
A1	0.004	0.010	0.10	0.25
B	0.014	0.019	0.35	0.49
C	0.007	0.010	0.19	0.25
e	0.050 BSC		1.27 BSC	
E	0.150	0.157	3.80	4.00
H	0.228	0.244	5.80	6.20
L	0.016	0.050	0.40	1.27

VARIATIONS:

	INCHES		MILLIMETERS			
DIM	MIN	MAX	MIN	MAX	N	MS012
D	0.189	0.197	4.80	5.00	8	AA
D	0.337	0.344	8.55	8.75	14	AB
D	0.386	0.394	9.80	10.00	16	AC

NOTES:
1. D&E DO NOT INCLUDE MOLD FLASH.
2. MOLD FLASH OR PROTRUSIONS NOT TO EXCEED 0.15mm (.006").
3. LEADS TO BE COPLANAR WITHIN 0.10mm (.004").
4. CONTROLLING DIMENSION: MILLIMETERS.
5. MEETS JEDEC MS012.
6. N = NUMBER OF PINS.

DALLAS SEMICONDUCTOR MAXIM
PROPRIETARY INFORMATION
TITLE: PACKAGE OUTLINE, .150" SOIC
APPROVAL | DOCUMENT CONTROL NO. 21-0041 | REV. B | 1/1

SOICN.EPS

Maxim cannot assume responsibility for use of any circuitry other than circuitry entirely embodied in a Maxim product. No circuit patent licenses are implied. Maxim reserves the right to change the circuitry and specifications without notice at any time.

© 2002 Maxim Integrated Products Printed USA MAXIM is a registered trademark of Maxim Integrated Products.