THIS DRAWING IS UNPUBLISHED. RELEASED FOR PUBLICATION 20
© COPYRIGHT 20 BY TYCO ELECTRONICS CORPORATION, ALL RIGHTS RESERVED.

LOC	DIST
AD	00

REVISIONS

P	LTR	DESCRIPTION	DATE	DWN	APVD
	B3	REVISED PER ECO-08-022187	06SEP2008	HMR	DR
	B4	REVISED PER ECO-09-008097	06APR2009	MF	DR

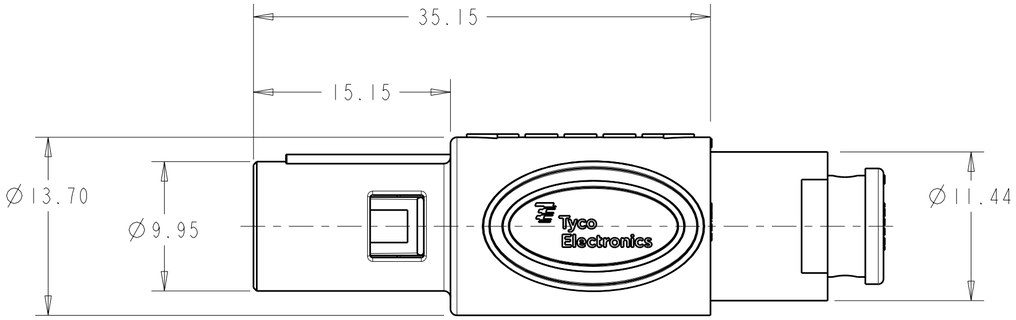

SCALE 3:1

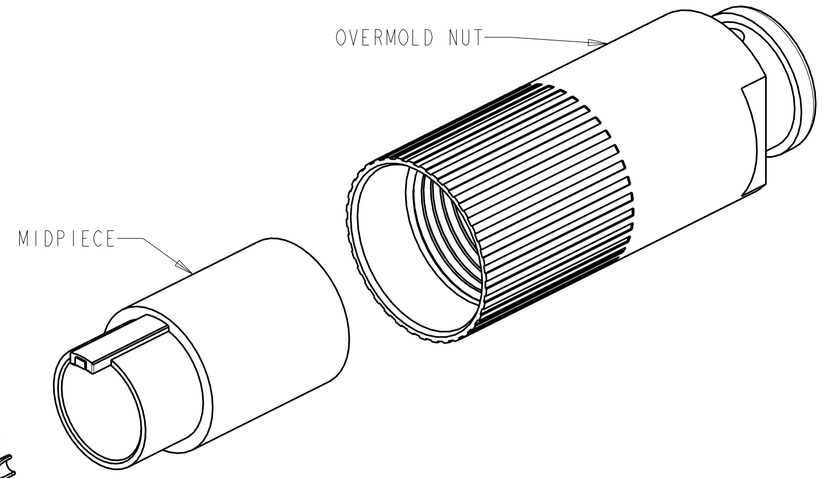

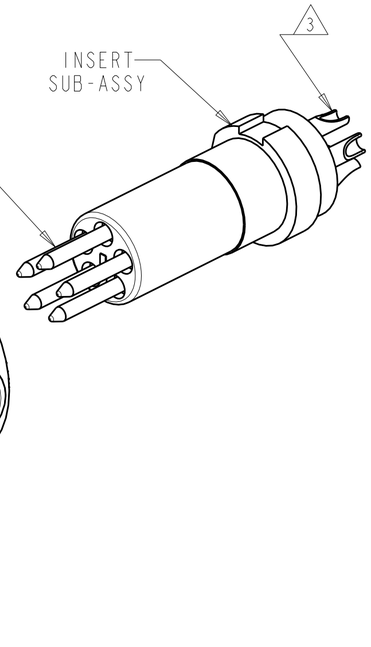

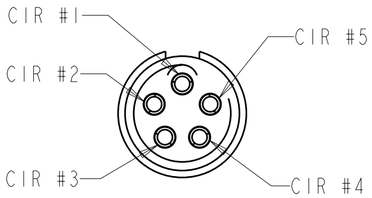

INSERT SUB-ASSY
CIRCUIT DESIGNATION VIEW

1. MATERIAL:
   CONTACT: BRASS
   LATCH HOUSING, INSERT, MIDPIECE, NUT:
   UL 94V-0 RATED THERMOPLASTIC
   O-RING: ELASTOMER
   COLOR:
   MIDPIECE AND INSERT: GRAY
   LATCH HOUSING AND OVERMOLD NUT: SEE TABLE
   O-RING: BLACK
2. FINISH:
   CONTACT, 0.75µm MIN. GOLD OVER NICKEL
3. SOLDER TERMINATION CONTACT, 22 AWG WIRE MAX.
4. PRODUCT IS SUPPLIED UNASSEMBLED
5. PRELIMINARY PART NUMBER.

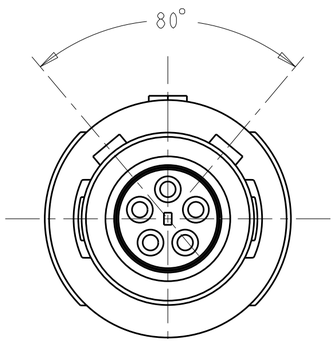

80° KEYING
SCALE 4:1

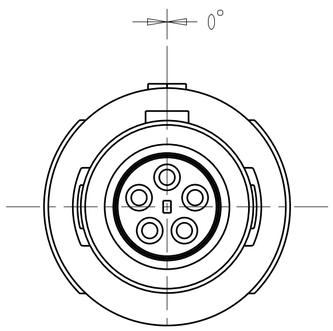

0° KEYING
SCALE 4:1

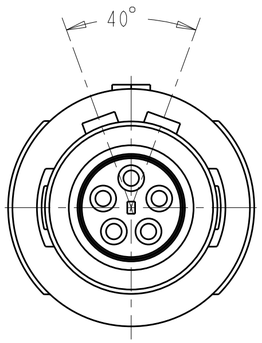

40° KEYING
SCALE 4:1

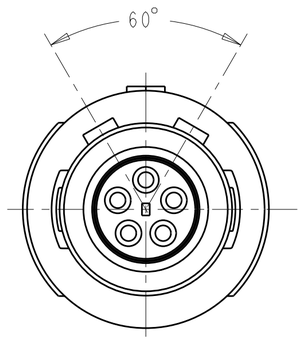

60° KEYING
SCALE 4:1

	LATCH HOUSING AND NUT COLOR	KEYING	PART NO.
5	GRAY	60°	1877849-8
5	BLACK	60°	1877849-7
	GRAY	40°	1877849-6
	BLACK	40°	1877849-5
	GRAY	80°	1877849-4
	GRAY	0°	1877849-3
	BLACK	80°	1877849-2
	BLACK	0°	1877849-1

THIS DRAWING IS A CONTROLLED DOCUMENT FOR TYCO ELECTRONICS CORPORATION. IT IS SUBJECT TO CHANGE AND THE CONTROLLING ENGINEERING ORGANIZATION SHOULD BE CONTACTED FOR THE LATEST REVISION.

DIMENSIONS: mm

TOLERANCES UNLESS OTHERWISE SPECIFIED:
0 PLC ±-
1 PLC ±0.13
2 PLC ±0.08
3 PLC ±-
4 PLC ±-
ANGLES ±1°

MATERIAL 1 -
FINISH 2 -

DWN K. MILLER 09MAR2006
CHK L.BREKOSKY 09MAR2006
APVD -
PRODUCT SPEC 108-2249
APPLICATION SPEC 114-13184
WEIGHT -

Tyco Electronics
Tyco Electronics
Harrisburg, PA 17105-3608

NAME
5 POSITION
OVERMOLD CABLE NUT
STRAIGHT PLUG ASSEMBLY

SIZE	CAGE CODE	DRAWING NO	RESTRICTED TO
A2	00779	C-1877849	-

CUSTOMER DRAWING | SCALE 5:1 | SHEET 1 OF 1 | REV B4

AMP 1471-9 REV 31MAR2000

Pro/ENGINEER DRAWING