74AUP1G80

Low-power D-type flip-flop; positive-edge trigger

Rev. 4 — 28 June 2012 Product data sheet

1. General description

The 74AUP1G80 provides the single positive-edge triggered D-type flip-flop. Information on the data input is transferred to the $\overline{Q}$ output on the LOW-to-HIGH transition of the clock pulse. The input pin D must be stable one set-up time prior to the LOW-to-HIGH clock transition for predictable operation.

Schmitt trigger action at all inputs makes the circuit tolerant to slower input rise and fall times across the entire V_{CC} range from 0.8 V to 3.6 V.

This device ensures a very low static and dynamic power consumption across the entire V_{CC} range from 0.8 V to 3.6 V.

This device is fully specified for partial power-down applications using I_{OFF}.
The I_{OFF} circuitry disables the output, preventing the damaging backflow current through the device when it is powered down.

2. Features and benefits

- Wide supply voltage range from 0.8 V to 3.6 V
- High noise immunity
- Complies with JEDEC standards:
  - JESD8-12 (0.8 V to 1.3 V)
  - JESD8-11 (0.9 V to 1.65 V)
  - JESD8-7 (1.2 V to 1.95 V)
  - JESD8-5 (1.8 V to 2.7 V)
  - JESD8-B (2.7 V to 3.6 V)
- ESD protection:
  - HBM JESD22-A114F exceeds 5000 V
  - MM JESD22-A115-A exceeds 200 V
  - CDM JESD22-C101E exceeds 1000 V
- Low static power consumption; I_{CC} = 0.9 μA (maximum)
- Latch-up performance exceeds 100 mA per JESD 78 Class II
- Inputs accept voltages up to 3.6 V
- Low noise overshoot and undershoot < 10 % of V_{CC}
- I_{OFF} circuitry provides partial power-down mode operation
- Multiple package options
- Specified from −40 °C to +85 °C and −40 °C to +125 °C

3. Ordering information

Table 1. Ordering information

Type number	Package			
	Temperature range	Name	Description	Version
74AUP1G80GW	–40 °C to +125 °C	TSSOP5	plastic thin shrink small outline package; 5 leads; body width 1.25 mm	SOT353-1
74AUP1G80GM	–40 °C to +125 °C	XSON6	plastic extremely thin small outline package; no leads; 6 terminals; body 1 × 1.45 × 0.5 mm	SOT886
74AUP1G80GF	–40 °C to +125 °C	XSON6	plastic extremely thin small outline package; no leads; 6 terminals; body 1 × 1 × 0.5 mm	SOT891
74AUP1G80GN	–40 °C to +125 °C	XSON6	extremely thin small outline package; no leads; 6 terminals; body 0.9 × 1.0 × 0.35 mm	SOT1115
74AUP1G80GS	–40 °C to +125 °C	XSON6	extremely thin small outline package; no leads; 6 terminals; body 1.0 × 1.0 × 0.35 mm	SOT1202
74AUP1G80GX	–40 °C to +125 °C	X2SON5	X2SON5: plastic thermal enhanced extremely thin small outline package; no leads; 5 terminals; body 0.8 × 0.8 × 0.35 mm	SOT1226

4. Marking

Table 2. Marking

Type number	Marking code[1]
74AUP1G80GW	pT
74AUP1G80GM	pT
74AUP1G80GF	pT
74AUP1G80GN	pT
74AUP1G80GS	pT
74AUP1G80GX	pT

[1] The pin 1 indicator is located on the lower left corner of the device, below the marking code.

5. Functional diagram

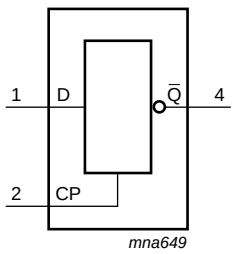

Fig 1. Logic symbol

Fig 2. IEC logic symbol

All information provided in this document is subject to legal disclaimers.

© Nexperia B.V. 2017. All rights reserved

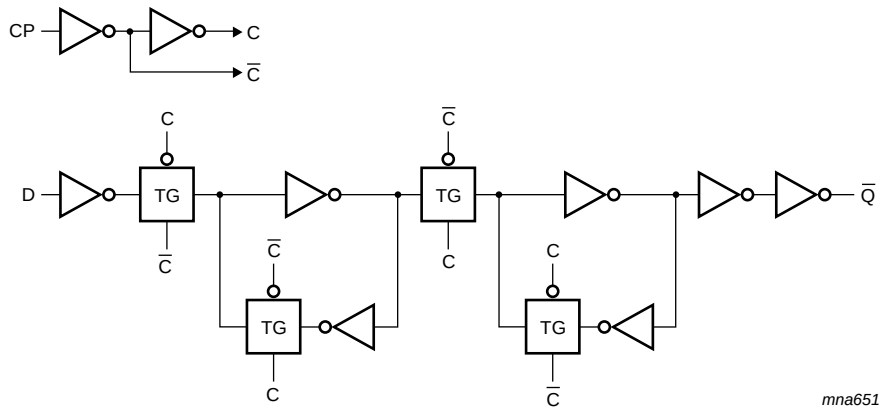

Fig 3. Logic diagram

6. Pinning information

6.1 Pinning

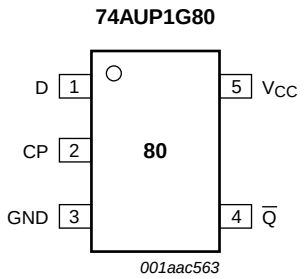

Fig 4. Pin configuration SOT353-1

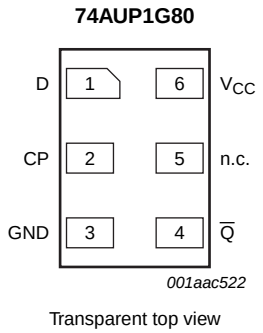

Fig 5. Pin configuration SOT886

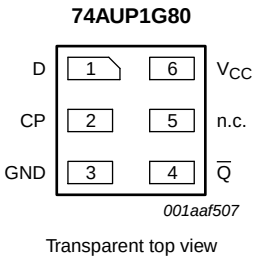

Fig 6. Pin configuration SOT891, SOT1115 and SOT1202

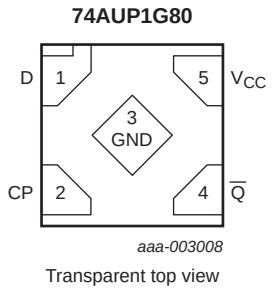

Fig 7. Pin configuration SOT1226 (X2SON5)

All information provided in this document is subject to legal disclaimers.

© Nexperia B.V. 2017. All rights reserved

6.2 Pin description

Table 3. Pin description

Symbol	Pin		Description
	TSSOP5 and X2SON5	XSON6	
D	1	1	data input
CP	2	2	clock pulse input
GND	3	3	ground (0 V)
$\overline{Q}$	4	4	data output
n.c.	-	5	not connected
V_{CC}	5	6	supply voltage

7. Functional description

Table 4. Function table[1]

Input		Output
CP	D	$\overline{Q}$
↑	L	H
↑	H	L
L	X	$\overline{q}$

[1] H = HIGH voltage level;
L = LOW voltage level;
↑ = LOW-to-HIGH CP transition;
X = don't care;
$\overline{q}$ = lower case letter indicates the state of referenced input, one set-up time prior to the LOW-to-HIGH CP transition.

8. Limiting values

Table 5. Limiting values

In accordance with the Absolute Maximum Rating System (IEC 60134). Voltages are referenced to GND (ground = 0 V).

Symbol	Parameter	Conditions		Min	Max	Unit
V_{CC}	supply voltage			–0.5	+4.6	V
I_{IK}	input clamping current	V_I < 0 V		–50	-	mA
V_I	input voltage		[1]	–0.5	+4.6	V
I_{OK}	output clamping current	V_O < 0 V		–50	-	mA
V_O	output voltage	Active mode and Power-down mode	[1]	–0.5	+4.6	V
I_O	output current	V_O = 0 V to V_{CC}		-	+20	mA
I_{CC}	supply current			-	50	mA
I_{GND}	ground current			–50	-	mA
T_{stg}	storage temperature			–65	+150	°C
P_{tot}	total power dissipation	T_{amb} = –40 °C to +125 °C	[2]	-	250	mW

[1] The minimum input and output voltage ratings may be exceeded if the input and output current ratings are observed.

[2] For TSSOP5 packages: above 87.5 °C the value of P_{tot} derates linearly with 4.0 mW/K.
For XSON6 and X2SON5 packages: above 118 °C the value of P_{tot} derates linearly with 7.8 mW/K.

All information provided in this document is subject to legal disclaimers.

© Nexperia B.V. 2017. All rights reserved

9. Recommended operating conditions

Table 6. Recommended operating conditions

Symbol	Parameter	Conditions	Min	Max	Unit
V_{CC}	supply voltage		0.8	3.6	V
V_I	input voltage		0	3.6	V
V_O	output voltage	Active mode and Power-down mode	0	3.6	V
T_{amb}	ambient temperature		−40	+125	°C
$\Delta t/\Delta V$	input transition rise and fall rate	V_{CC} = 0.8 V to 3.6 V	0	200	ns/V

10. Static characteristics

Table 7. Static characteristics

At recommended operating conditions; voltages are referenced to GND (ground = 0 V).

Symbol	Parameter	Conditions	Min	Typ	Max	Unit
T_{amb} = 25 °C						
V_{IH}	HIGH-level input voltage	V_{CC} = 0.8 V	0.70 × V_{CC}	-	-	V
		V_{CC} = 0.9 V to 1.95 V	0.65 × V_{CC}	-	-	V
		V_{CC} = 2.3 V to 2.7 V	1.6	-	-	V
		V_{CC} = 3.0 V to 3.6 V	2.0	-	-	V
V_{IL}	LOW-level input voltage	V_{CC} = 0.8 V	-	-	0.30 × V_{CC}	V
		V_{CC} = 0.9 V to 1.95 V	-	-	0.35 × V_{CC}	V
		V_{CC} = 2.3 V to 2.7 V	-	-	0.7	V
		V_{CC} = 3.0 V to 3.6 V	-	-	0.9	V
V_{OH}	HIGH-level output voltage	$V_I = V_{IH}$ or V_{IL}				
		I_O = −20 μA; V_{CC} = 0.8 V to 3.6 V	V_{CC} − 0.1	-	-	V
		I_O = −1.1 mA; V_{CC} = 1.1 V	0.75 × V_{CC}	-	-	V
		I_O = −1.7 mA; V_{CC} = 1.4 V	1.11	-	-	V
		I_O = −1.9 mA; V_{CC} = 1.65 V	1.32	-	-	V
		I_O = −2.3 mA; V_{CC} = 2.3 V	2.05	-	-	V
		I_O = −3.1 mA; V_{CC} = 2.3 V	1.9	-	-	V
		I_O = −2.7 mA; V_{CC} = 3.0 V	2.72	-	-	V
		I_O = −4.0 mA; V_{CC} = 3.0 V	2.6	-	-	V
V_{OL}	LOW-level output voltage	$V_I = V_{IH}$ or V_{IL}				
		I_O = 20 μA; V_{CC} = 0.8 V to 3.6 V	-	-	0.1	V
		I_O = 1.1 mA; V_{CC} = 1.1 V	-	-	0.3 × V_{CC}	V
		I_O = 1.7 mA; V_{CC} = 1.4 V	-	-	0.31	V
		I_O = 1.9 mA; V_{CC} = 1.65 V	-	-	0.31	V
		I_O = 2.3 mA; V_{CC} = 2.3 V	-	-	0.31	V
		I_O = 3.1 mA; V_{CC} = 2.3 V	-	-	0.44	V
		I_O = 2.7 mA; V_{CC} = 3.0 V	-	-	0.31	V
		I_O = 4.0 mA; V_{CC} = 3.0 V	-	-	0.44	V
I_I	input leakage current	V_I = GND to 3.6 V; V_{CC} = 0 V to 3.6 V	-	-	±0.1	μA

All information provided in this document is subject to legal disclaimers.

© Nexperia B.V. 2017. All rights reserved

Table 7. Static characteristics *...continued*

At recommended operating conditions; voltages are referenced to GND (ground = 0 V).

Symbol	Parameter	Conditions		Min	Typ	Max	Unit
I_{OFF}	power-off leakage current	V_I or V_O = 0 V to 3.6 V; V_{CC} = 0 V		-	-	±0.2	μA
ΔI_{OFF}	additional power-off leakage current	V_I or V_O = 0 V to 3.6 V; V_{CC} = 0 V to 0.2 V		-	-	±0.2	μA
I_{CC}	supply current	V_I = GND or V_{CC}; I_O = 0 A; V_{CC} = 0.8 V to 3.6 V		-	-	0.5	μA
ΔI_{CC}	additional supply current	V_I = V_{CC} − 0.6 V; I_O = 0 A; V_{CC} = 3.3 V	[1]	-	-	40	μA
C_I	input capacitance	V_{CC} = 0 V to 3.6 V; V_I = GND or V_{CC}		-	1.5	-	pF
C_O	output capacitance	V_O = GND; V_{CC} = 0 V		-	3.0	-	pF
T_{amb} = −40 °C to +85 °C							
V_{IH}	HIGH-level input voltage	V_{CC} = 0.8 V		0.70 × V_{CC}	-	-	V
		V_{CC} = 0.9 V to 1.95 V		0.65 × V_{CC}	-	-	V
		V_{CC} = 2.3 V to 2.7 V		1.6	-	-	V
		V_{CC} = 3.0 V to 3.6 V		2.0	-	-	V
V_{IL}	LOW-level input voltage	V_{CC} = 0.8 V		-	-	0.30 × V_{CC}	V
		V_{CC} = 0.9 V to 1.95 V		-	-	0.35 × V_{CC}	V
		V_{CC} = 2.3 V to 2.7 V		-	-	0.7	V
		V_{CC} = 3.0 V to 3.6 V		-	-	0.9	V
V_{OH}	HIGH-level output voltage	V_I = V_{IH} or V_{IL}					
		I_O = −20 μA; V_{CC} = 0.8 V to 3.6 V		V_{CC} − 0.1	-	-	V
		I_O = −1.1 mA; V_{CC} = 1.1 V		0.7 × V_{CC}	-	-	V
		I_O = −1.7 mA; V_{CC} = 1.4 V		1.03	-	-	V
		I_O = −1.9 mA; V_{CC} = 1.65 V		1.30	-	-	V
		I_O = −2.3 mA; V_{CC} = 2.3 V		1.97	-	-	V
		I_O = −3.1 mA; V_{CC} = 2.3 V		1.85	-	-	V
		I_O = −2.7 mA; V_{CC} = 3.0 V		2.67	-	-	V
		I_O = −4.0 mA; V_{CC} = 3.0 V		2.55	-	-	V
V_{OL}	LOW-level output voltage	V_I = V_{IH} or V_{IL}					
		I_O = 20 μA; V_{CC} = 0.8 V to 3.6 V		-	-	0.1	V
		I_O = 1.1 mA; V_{CC} = 1.1 V		-	-	0.3 × V_{CC}	V
		I_O = 1.7 mA; V_{CC} = 1.4 V		-	-	0.37	V
		I_O = 1.9 mA; V_{CC} = 1.65 V		-	-	0.35	V
		I_O = 2.3 mA; V_{CC} = 2.3 V		-	-	0.33	V
		I_O = 3.1 mA; V_{CC} = 2.3 V		-	-	0.45	V
		I_O = 2.7 mA; V_{CC} = 3.0 V		-	-	0.33	V
		I_O = 4.0 mA; V_{CC} = 3.0 V		-	-	0.45	V
I_I	input leakage current	V_I = GND to 3.6 V; V_{CC} = 0 V to 3.6 V		-	-	±0.5	μA
I_{OFF}	power-off leakage current	V_I or V_O = 0 V to 3.6 V; V_{CC} = 0 V		-	-	±0.5	μA
ΔI_{OFF}	additional power-off leakage current	V_I or V_O = 0 V to 3.6 V; V_{CC} = 0 V to 0.2 V		-	-	±0.6	μA

All information provided in this document is subject to legal disclaimers.

© Nexperia B.V. 2017. All rights reserved

Table 7. Static characteristics *...continued*

At recommended operating conditions; voltages are referenced to GND (ground = 0 V).

Symbol	Parameter	Conditions		Min	Typ	Max	Unit
I_{CC}	supply current	V_I = GND or V_{CC}; I_O = 0 A; V_{CC} = 0.8 V to 3.6 V		-	-	0.9	μA
ΔI_{CC}	additional supply current	$V_I = V_{CC} - 0.6$ V; I_O = 0 A; V_{CC} = 3.3 V	[1]	-	-	50	μA
T_{amb} = –40 °C to +125 °C							
V_{IH}	HIGH-level input voltage	V_{CC} = 0.8 V		0.75 × V_{CC}	-	-	V
		V_{CC} = 0.9 V to 1.95 V		0.70 × V_{CC}	-	-	V
		V_{CC} = 2.3 V to 2.7 V		1.6	-	-	V
		V_{CC} = 3.0 V to 3.6 V		2.0	-	-	V
V_{IL}	LOW-level input voltage	V_{CC} = 0.8 V		-	-	0.25 × V_{CC}	V
		V_{CC} = 0.9 V to 1.95 V		-	-	0.30 × V_{CC}	V
		V_{CC} = 2.3 V to 2.7 V		-	-	0.7	V
		V_{CC} = 3.0 V to 3.6 V		-	-	0.9	V
V_{OH}	HIGH-level output voltage	$V_I = V_{IH}$ or V_{IL}					
		I_O = –20 μA; V_{CC} = 0.8 V to 3.6 V		V_{CC} – 0.11	-	-	V
		I_O = –1.1 mA; V_{CC} = 1.1 V		0.6 × V_{CC}	-	-	V
		I_O = –1.7 mA; V_{CC} = 1.4 V		0.93	-	-	V
		I_O = –1.9 mA; V_{CC} = 1.65 V		1.17	-	-	V
		I_O = –2.3 mA; V_{CC} = 2.3 V		1.77	-	-	V
		I_O = –3.1 mA; V_{CC} = 2.3 V		1.67	-	-	V
		I_O = –2.7 mA; V_{CC} = 3.0 V		2.40	-	-	V
		I_O = –4.0 mA; V_{CC} = 3.0 V		2.30	-	-	V
V_{OL}	LOW-level output voltage	$V_I = V_{IH}$ or V_{IL}					
		I_O = 20 μA; V_{CC} = 0.8 V to 3.6 V		-	-	0.11	V
		I_O = 1.1 mA; V_{CC} = 1.1 V		-	-	0.33 × V_{CC}	V
		I_O = 1.7 mA; V_{CC} = 1.4 V		-	-	0.41	V
		I_O = 1.9 mA; V_{CC} = 1.65 V		-	-	0.39	V
		I_O = 2.3 mA; V_{CC} = 2.3 V		-	-	0.36	V
		I_O = 3.1 mA; V_{CC} = 2.3 V		-	-	0.50	V
		I_O = 2.7 mA; V_{CC} = 3.0 V		-	-	0.36	V
		I_O = 4.0 mA; V_{CC} = 3.0 V		-	-	0.50	V
I_I	input leakage current	V_I = GND to 3.6 V; V_{CC} = 0 V to 3.6 V		-	-	±0.75	μA
I_{OFF}	power-off leakage current	V_I or V_O = 0 V to 3.6 V; V_{CC} = 0 V		-	-	±0.75	μA
ΔI_{OFF}	additional power-off leakage current	V_I or V_O = 0 V to 3.6 V; V_{CC} = 0 V to 0.2 V		-	-	±0.75	μA
I_{CC}	supply current	V_I = GND or V_{CC}; I_O = 0 A; V_{CC} = 0.8 V to 3.6 V		-	-	1.4	μA
ΔI_{CC}	additional supply current	$V_I = V_{CC} - 0.6$ V; I_O = 0 A; V_{CC} = 3.3 V	[1]	-	-	75	μA

[1] One input at V_{CC} – 0.6 V, other input at V_{CC} or GND.

All information provided in this document is subject to legal disclaimers.

© Nexperia B.V. 2017. All rights reserved

11. Dynamic characteristics

Table 8. Dynamic characteristics

Voltages are referenced to GND (ground = 0 V; for test circuit see Figure 10

Symbol	Parameter	Conditions	25 °C			–40 °C to +125 °C				Unit
			Min	Typ[1]	Max	Min (85 °C)	Max (85 °C)	Min (125 °C)	Max (125 °C)	
C_L = 5 pF										
t_{pd}	propagation delay	CP to $\overline{Q}$; see Figure 8 [2]								
		V_{CC} = 0.8 V	-	20.9	-	-	-	-	-	ns
		V_{CC} = 1.1 V to 1.3 V	2.9	6.0	12.9	2.6	14.3	2.6	15.7	ns
		V_{CC} = 1.4 V to 1.6 V	1.9	4.2	7.6	2.0	8.9	2.0	9.8	ns
		V_{CC} = 1.65 V to 1.95 V	1.7	3.4	5.9	1.6	7.0	1.6	7.7	ns
		V_{CC} = 2.3 V to 2.7 V	1.4	2.6	4.3	1.2	5.6	1.2	6.2	ns
		V_{CC} = 3.0 V to 3.6 V	1.2	2.2	3.6	1.0	4.4	1.0	4.8	ns
f_{max}	maximum frequency	CP; see Figure 9								
		V_{CC} = 0.8 V	-	53	-	-	-	-	-	MHz
		V_{CC} = 1.1 V to 1.3 V	-	203	-	170	-	170	-	MHz
		V_{CC} = 1.4 V to 1.6 V	-	347	-	310	-	300	-	MHz
		V_{CC} = 1.65 V to 1.95 V	-	435	-	400	-	390	-	MHz
		V_{CC} = 2.3 V to 2.7 V	-	550	-	490	-	480	-	MHz
		V_{CC} = 3.0 V to 3.6 V	-	619	-	550	-	510	-	MHz
C_L = 10 pF										
t_{pd}	propagation delay	CP to $\overline{Q}$; see Figure 8 [2]								
		V_{CC} = 0.8 V	-	24.6	-	-	-	-	-	ns
		V_{CC} = 1.1 V to 1.3 V	3.3	6.9	14.9	3.0	16.5	3.0	18.1	ns
		V_{CC} = 1.4 V to 1.6 V	2.6	4.8	8.8	2.3	10.3	2.3	11.3	ns
		V_{CC} = 1.65 V to 1.95 V	2.3	3.9	6.8	2.0	8.1	2.0	8.9	ns
		V_{CC} = 2.3 V to 2.7 V	1.9	3.1	5.1	1.7	6.3	1.7	6.9	ns
		V_{CC} = 3.0 V to 3.6 V	1.8	2.7	4.4	1.4	4.9	1.4	5.4	ns
f_{max}	maximum frequency	CP; see Figure 9								
		V_{CC} = 0.8 V	-	52	-	-	-	-	-	MHz
		V_{CC} = 1.1 V to 1.3 V	-	192	-	150	-	150	-	MHz
		V_{CC} = 1.4 V to 1.6 V	-	324	-	280	-	230	-	MHz
		V_{CC} = 1.65 V to 1.95 V	-	421	-	310	-	250	-	MHz
		V_{CC} = 2.3 V to 2.7 V	-	486	-	370	-	360	-	MHz
		V_{CC} = 3.0 V to 3.6 V	-	550	-	410	-	360	-	MHz

All information provided in this document is subject to legal disclaimers.

© Nexperia B.V. 2017. All rights reserved

Table 8. Dynamic characteristics *...continued*

Voltages are referenced to GND (ground = 0 V; for test circuit see Figure 10

Symbol	Parameter	Conditions	25 °C			–40 °C to +125 °C				Unit
			Min	Typ[1]	Max	Min (85 °C)	Max (85 °C)	Min (125 °C)	Max (125 °C)	
C_L = 15 pF										
t_{pd}	propagation delay	CP to $\overline{Q}$; see Figure 8 [2]								
		V_{CC} = 0.8 V	-	28.2	-	-	-	-	-	ns
		V_{CC} = 1.1 V to 1.3 V	3.0	7.6	16.7	3.4	18.6	3.4	20.5	ns
		V_{CC} = 1.4 V to 1.6 V	3.0	5.3	9.8	2.6	11.5	2.6	12.7	ns
		V_{CC} = 1.65 V to 1.95 V	2.6	4.4	7.6	2.3	9.1	2.3	10.0	ns
		V_{CC} = 2.3 V to 2.7 V	2.2	3.5	5.7	2.0	6.9	2.0	7.6	ns
		V_{CC} = 3.0 V to 3.6 V	1.9	3.1	5.0	1.8	5.5	1.8	6.1	ns
f_{max}	maximum frequency	CP; see Figure 9								
		V_{CC} = 0.8 V	-	50	-	-	-	-	-	MHz
		V_{CC} = 1.1 V to 1.3 V	-	181	-	120	-	120	-	MHz
		V_{CC} = 1.4 V to 1.6 V	-	301	-	190	-	160	-	MHz
		V_{CC} = 1.65 V to 1.95 V	-	407	-	240	-	190	-	MHz
		V_{CC} = 2.3 V to 2.7 V	-	422	-	300	-	270	-	MHz
		V_{CC} = 3.0 V to 3.6 V	-	481	-	320	-	300	-	MHz
C_L = 30 pF										
t_{pd}	propagation delay	CP to $\overline{Q}$; see Figure 8 [2]								
		V_{CC} = 0.8 V	-	38.8	-	-	-	-	-	ns
		V_{CC} = 1.1 V to 1.3 V	4.9	9.8	20.7	4.4	24.7	4.4	27.2	ns
		V_{CC} = 1.4 V to 1.6 V	4.0	6.8	12.7	3.5	15.0	3.5	16.5	ns
		V_{CC} = 1.65 V to 1.95 V	3.5	5.6	9.9	2.2	11.9	2.2	13.0	ns
		V_{CC} = 2.3 V to 2.7 V	3.1	4.5	7.5	2.8	9.3	2.8	10.2	ns
		V_{CC} = 3.0 V to 3.6 V	2.9	4.1	6.4	2.7	7.5	2.7	8.3	ns
f_{max}	maximum frequency	CP; see Figure 9								
		V_{CC} = 0.8 V	-	28	-	-	-	-	-	MHz
		V_{CC} = 1.1 V to 1.3 V	-	128	-	70	-	70	-	MHz
		V_{CC} = 1.4 V to 1.6 V	-	206	-	120	-	110	-	MHz
		V_{CC} = 1.65 V to 1.95 V	-	262	-	150	-	120	-	MHz
		V_{CC} = 2.3 V to 2.7 V	-	269	-	190	-	170	-	MHz
		V_{CC} = 3.0 V to 3.6 V	-	309	-	200	-	190	-	MHz
C_L = 5 pF, 10 pF, 15 pF and 30 pF										
$t_{su(H)}$	set-up time HIGH	D to CP; see Figure 9								
		V_{CC} = 0.8 V	-	2.5	-	-	-	-	-	ns
		V_{CC} = 1.1 V to 1.3 V	-	0.5	-	2.2	-	2.2	-	ns
		V_{CC} = 1.4 V to 1.6 V	-	0.3	-	1.1	-	1.1	-	ns
		V_{CC} = 1.65 V to 1.95 V	-	0.3	-	0.8	-	0.8	-	ns
		V_{CC} = 2.3 V to 2.7 V	-	0.2	-	0.6	-	0.6	-	ns
		V_{CC} = 3.0 V to 3.6 V	-	0.2	-	0.4	-	0.4	-	ns

All information provided in this document is subject to legal disclaimers.

© Nexperia B.V. 2017. All rights reserved

Table 8. Dynamic characteristics *...continued*

Voltages are referenced to GND (ground = 0 V; for test circuit see Figure 10

Symbol	Parameter	Conditions	25 °C			–40 °C to +125 °C				Unit
			Min	Typ[1]	Max	Min (85 °C)	Max (85 °C)	Min (125 °C)	Max (125 °C)	
$t_{su(L)}$	set-up time LOW	D to CP; see Figure 9								
		V_{CC} = 0.8 V	-	1.7	-	-	-	-	-	ns
		V_{CC} = 1.1 V to 1.3 V	-	0.3	-	2.0	-	2.0	-	ns
		V_{CC} = 1.4 V to 1.6 V	-	0.2	-	1.3	-	1.3	-	ns
		V_{CC} = 1.65 V to 1.95 V	-	0.2	-	1.1	-	1.1	-	ns
		V_{CC} = 2.3 V to 2.7 V	-	0.3	-	0.8	-	0.8	-	ns
		V_{CC} = 3.0 V to 3.6 V	-	0.3	-	0.7	-	0.7	-	ns
t_h	hold time	D to CP; see Figure 9								
		V_{CC} = 0.8 V	-	-2.1	-	-	-	-	-	ns
		V_{CC} = 1.1 V to 1.3 V	-	-0.4	-	0.2	-	0.2	-	ns
		V_{CC} = 1.4 V to 1.6 V	-	-0.3	-	0.1	-	0.1	-	ns
		V_{CC} = 1.65 V to 1.95 V	-	-0.2	-	0	-	0	-	ns
		V_{CC} = 2.3 V to 2.7 V	-	-0.2	-	0	-	0	-	ns
		V_{CC} = 3.0 V to 3.6 V	-	-0.3	-	0	-	0	-	ns
t_W	pulse width	CP HIGH or LOW; see Figure 9								
		V_{CC} = 0.8 V	-	5.2	-	-	-	-	-	ns
		V_{CC} = 1.1 V to 1.3 V	-	1.0	-	3.0	-	3.0	-	ns
		V_{CC} = 1.4 V to 1.6 V	-	0.8	-	2.0	-	2.0	-	ns
		V_{CC} = 1.65 V to 1.95 V	-	0.6	-	2.0	-	2.0	-	ns
		V_{CC} = 2.3 V to 2.7 V	-	0.5	-	2.0	-	2.0	-	ns
		V_{CC} = 3.0 V to 3.6 V	-	0.5	-	2.0	-	2.0	-	ns
C_{PD}	power dissipation capacitance	f_i = 1 MHz; V_I = GND to V_{CC} [3]								
		V_{CC} = 0.8 V	-	1.8	-	-	-	-	-	pF
		V_{CC} = 1.1 V to 1.3 V	-	1.8	-	-	-	-	-	pF
		V_{CC} = 1.4 V to 1.6 V	-	1.9	-	-	-	-	-	pF
		V_{CC} = 1.65 V to 1.95 V	-	2.0	-	-	-	-	-	pF
		V_{CC} = 2.3 V to 2.7 V	-	2.4	-	-	-	-	-	pF
		V_{CC} = 3.0 V to 3.6 V	-	2.9	-	-	-	-	-	pF

[1] All typical values are measured at nominal V_{CC}.

[2] t_{pd} is the same as t_{PLH} and t_{PHL}.

[3] C_{PD} is used to determine the dynamic power dissipation (P_D in μW).

$P_D = C_{PD} \times V_{CC}^2 \times f_i \times N + \Sigma(C_L \times V_{CC}^2 \times f_o)$ where:

f_i = input frequency in MHz;

f_o = output frequency in MHz;

C_L = output load capacitance in pF;

V_{CC} = supply voltage in V;

N = number of inputs switching;

$\Sigma(C_L \times V_{CC}^2 \times f_o)$ = sum of the outputs.

All information provided in this document is subject to legal disclaimers.

© Nexperia B.V. 2017. All rights reserved

12. Waveforms

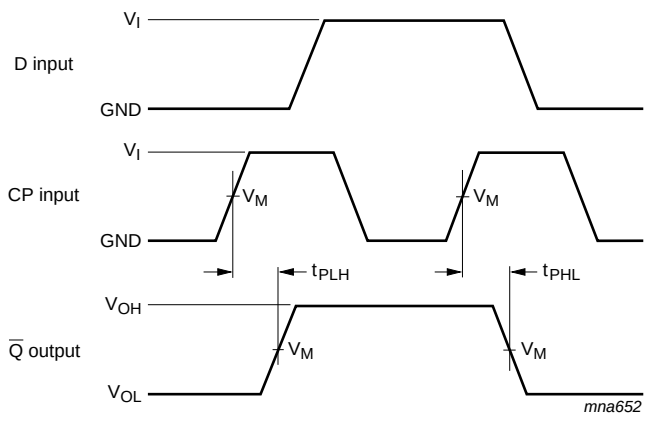

Measurement points are given in Table 9.

Logic levels: V_{OL} and V_{OH} are typical output voltage drop that occur with the output load.

Fig 8. The clock input (CP) to output ($\overline{Q}$) propagation delays

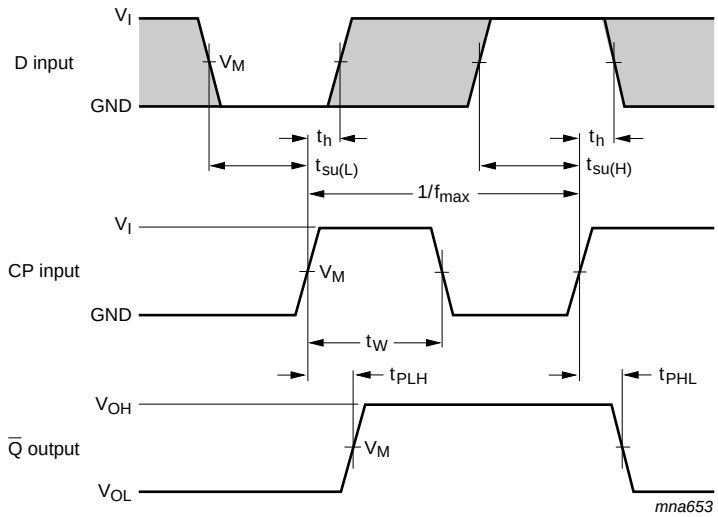

Measurement points are given in Table 9.

Logic levels: V_{OL} and V_{OH} are typical output voltage drop that occur with the output load.

Fig 9. The clock input (CP) to output ($\overline{Q}$) propagation delays, clock pulse width, D to CP set-up and hold times and the maximum input clock frequency

Table 9. Measurement points

Supply voltage	Output	Input		
V_{CC}	V_M	V_M	V_I	$t_r = t_f$
0.8 V to 3.6 V	$0.5 \times V_{CC}$	$0.5 \times V_{CC}$	V_{CC}	≤ 3.0 ns

All information provided in this document is subject to legal disclaimers.

© Nexperia B.V. 2017. All rights reserved

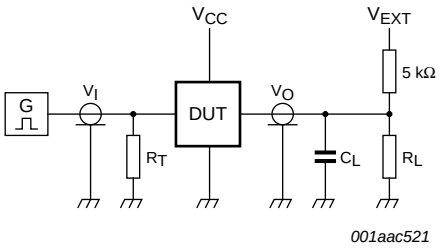

Test data is given in Table 10.

Definitions for test circuit:

R_L = Load resistance.

C_L = Load capacitance including jig and probe capacitance.

R_T = Termination resistance should be equal to the output impedance Z_o of the pulse generator.

V_{EXT} = External voltage for measuring switching times.

Fig 10. Test circuit for measuring switching times

Table 10. Test data

Supply voltage	Load		V_{EXT}		
V_{CC}	C_L	R_L [1]	t_{PLH}, t_{PHL}	t_{PZH}, t_{PHZ}	t_{PZL}, t_{PLZ}
0.8 V to 3.6 V	5 pF, 10 pF, 15 pF and 30 pF	5 kΩ or 1 MΩ	open	GND	$2 \times V_{CC}$

[1] For measuring enable and disable times R_L = 5 kΩ, for measuring propagation delays, setup and hold times and pulse width R_L = 1 MΩ.

All information provided in this document is subject to legal disclaimers.

© Nexperia B.V. 2017. All rights reserved

13. Package outline

TSSOP5: plastic thin shrink small outline package; 5 leads; body width 1.25 mm **SOT353-1**

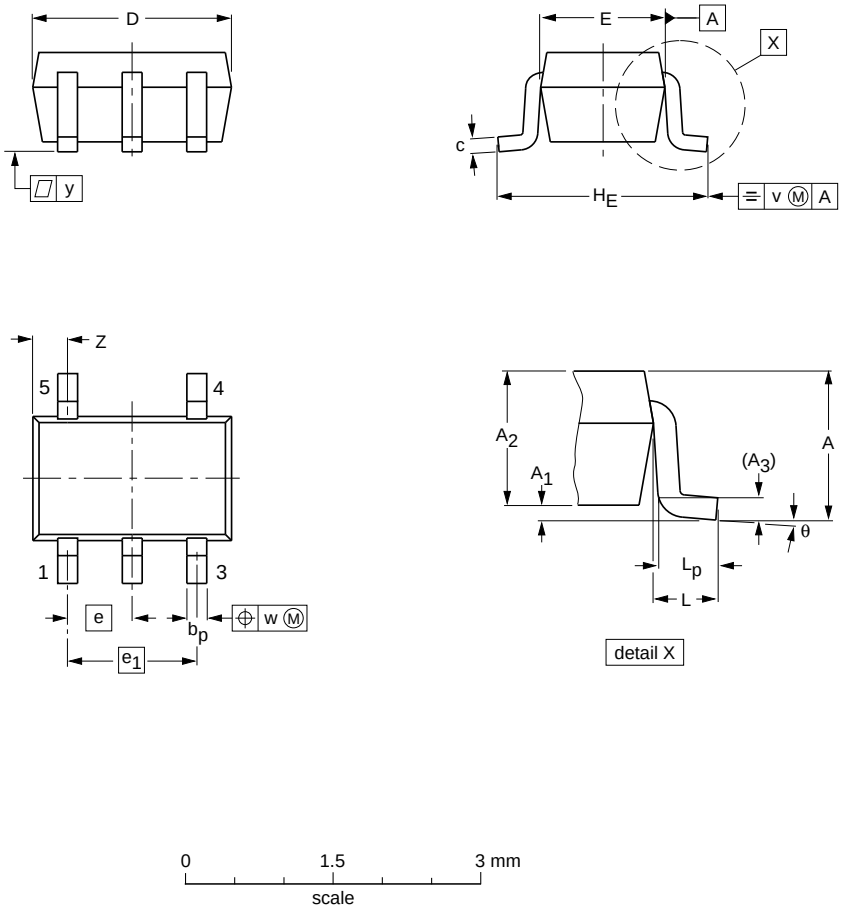

DIMENSIONS (mm are the original dimensions)

UNIT	A max.	A_1	A_2	A_3	b_p	c	D(1)	E(1)	e	e_1	H_E	L	L_p	v	w	y	Z(1)	θ
mm	1.1	0.1 0	1.0 0.8	0.15	0.30 0.15	0.25 0.08	2.25 1.85	1.35 1.15	0.65	1.3	2.25 2.0	0.425	0.46 0.21	0.3	0.1	0.1	0.60 0.15	7° 0°

Note

1. Plastic or metal protrusions of 0.15 mm maximum per side are not included.

OUTLINE VERSION	REFERENCES				EUROPEAN PROJECTION	ISSUE DATE
	IEC	JEDEC	JEITA			
SOT353-1		MO-203	SC-88A			~~00-09-01~~ 03-02-19

Fig 11. Package outline SOT353-1 (TSSOP5)

All information provided in this document is subject to legal disclaimers.

© Nexperia B.V. 2017. All rights reserved

XSON6: plastic extremely thin small outline package; no leads; 6 terminals; body 1 x 1.45 x 0.5 mm

SOT886

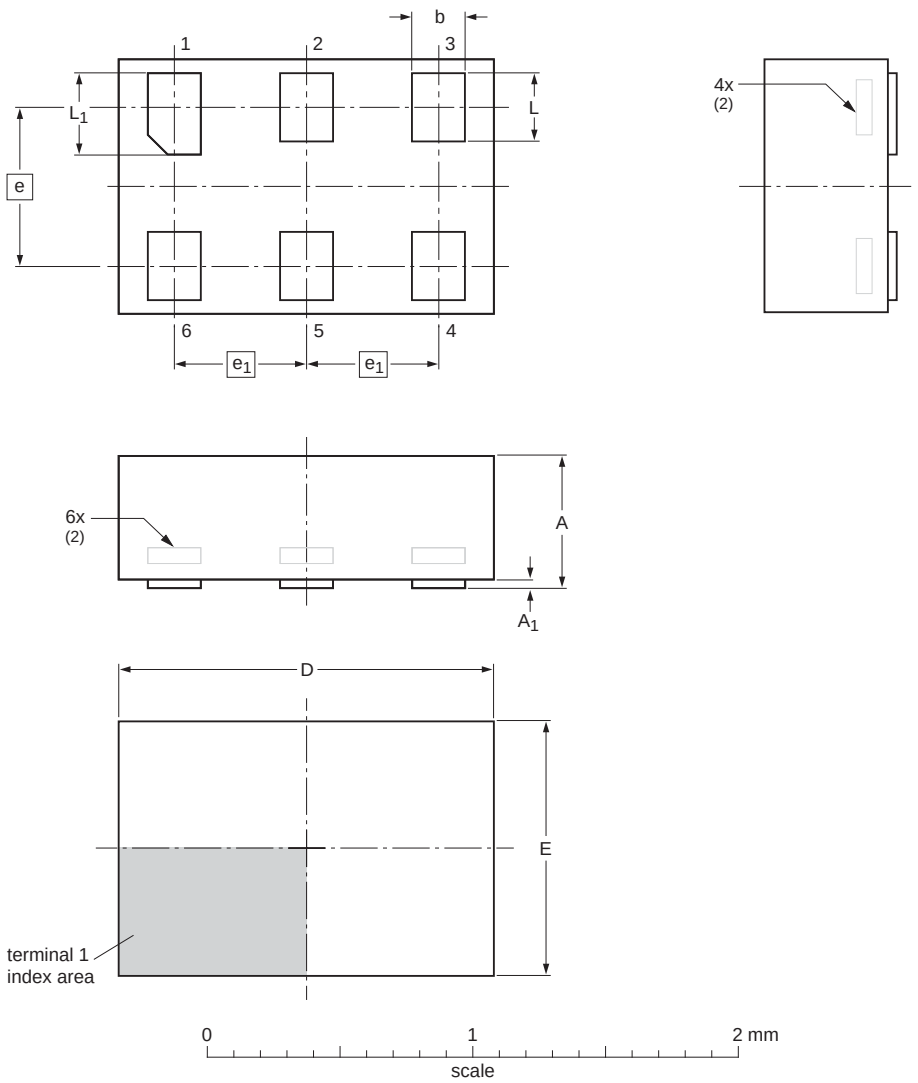

Dimensions (mm are the original dimensions)

Unit		A(1)	A_1	b	D	E	e	e_1	L	L_1
mm	max	0.5	0.04	0.25	1.50	1.05			0.35	0.40
	nom			0.20	1.45	1.00	0.6	0.5	0.30	0.35
	min			0.17	1.40	0.95			0.27	0.32

Notes
1. Including plating thickness.
2. Can be visible in some manufacturing processes.

sot886_po

Outline version	References				European projection	Issue date
	IEC	JEDEC	JEITA			
SOT886		MO-252				~~04-07-22~~ 12-01-05

Fig 12. Package outline SOT886 (XSON6)

All information provided in this document is subject to legal disclaimers.

© Nexperia B.V. 2017. All rights reserved

XSON6: plastic extremely thin small outline package; no leads; 6 terminals; body 1 x 1 x 0.5 mm **SOT891**

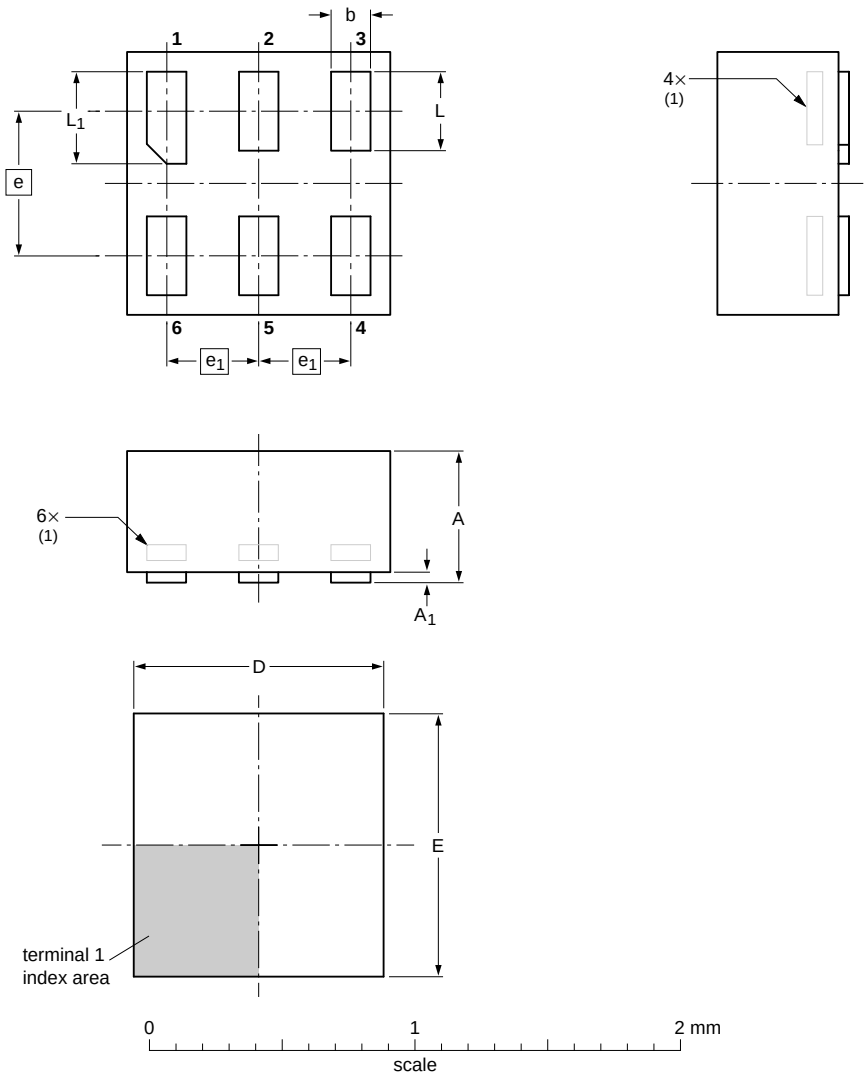

DIMENSIONS (mm are the original dimensions)

UNIT	A max	A_1 max	b	D	E	e	e_1	L	L_1
mm	0.5	0.04	0.20 0.12	1.05 0.95	1.05 0.95	0.55	0.35	0.35 0.27	0.40 0.32

Note

1. Can be visible in some manufacturing processes.

OUTLINE VERSION	REFERENCES				EUROPEAN PROJECTION	ISSUE DATE
	IEC	JEDEC	JEITA			
SOT891						~~05-04-06~~ 07-05-15

Fig 13. Package outline SOT891 (XSON6)

All information provided in this document is subject to legal disclaimers.

© Nexperia B.V. 2017. All rights reserved

XSON6: extremely thin small outline package; no leads; 6 terminals; body 0.9 x 1.0 x 0.35 mm **SOT1115**

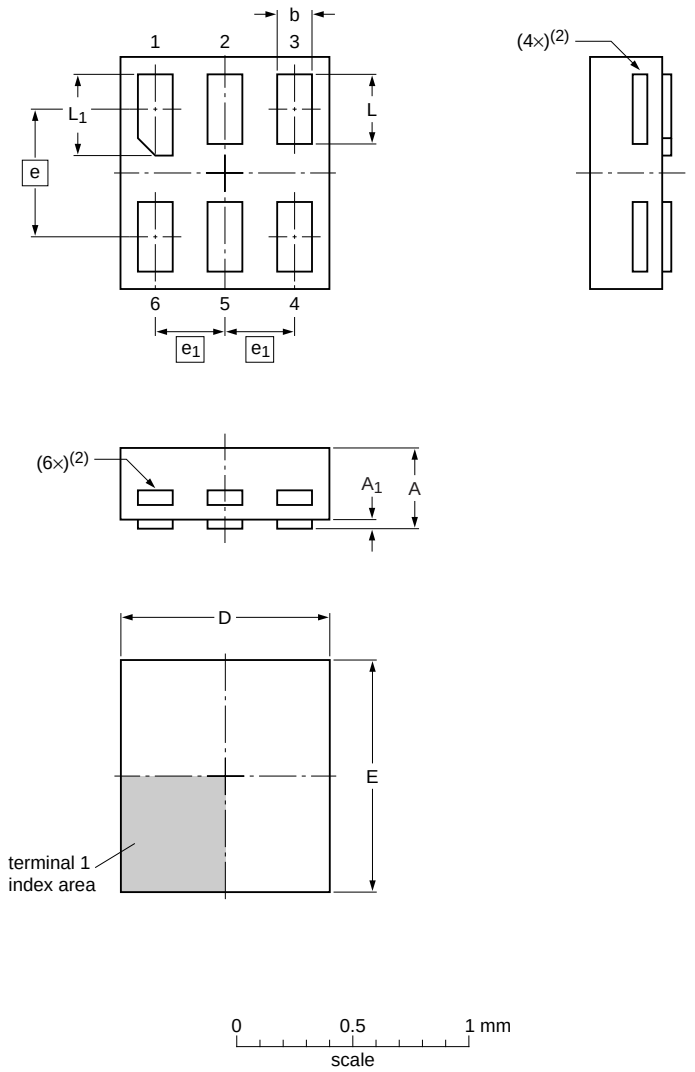

Dimensions

Unit		A(1)	A_1	b	D	E	e	e_1	L	L_1
mm	max	0.35	0.04	0.20	0.95	1.05			0.35	0.40
	nom			0.15	0.90	1.00	0.55	0.3	0.30	0.35
	min			0.12	0.85	0.95			0.27	0.32

Note
1. Including plating thickness.
2. Visible depending upon used manufacturing technology.

sot1115_po

Outline version	References				European projection	Issue date
	IEC	JEDEC	JEITA			
SOT1115						~~10-04-02~~ 10-04-07

Fig 14. Package outline SOT1115 (XSON6)

All information provided in this document is subject to legal disclaimers.

© Nexperia B.V. 2017. All rights reserved

XSON6: extremely thin small outline package; no leads; 6 terminals; body 1.0 x 1.0 x 0.35 mm **SOT1202**

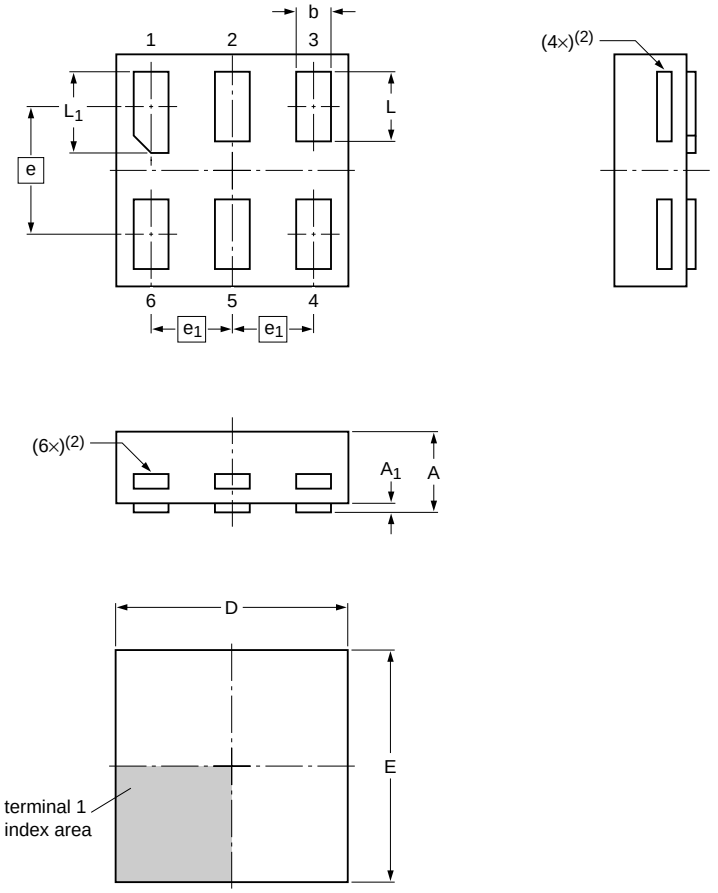

Dimensions

Unit		A(1)	A_1	b	D	E	e	e_1	L	L_1
mm	max	0.35	0.04	0.20	1.05	1.05			0.35	0.40
	nom			0.15	1.00	1.00	0.55	0.35	0.30	0.35
	min			0.12	0.95	0.95			0.27	0.32

Note
1. Including plating thickness.
2. Visible depending upon used manufacturing technology.

sot1202_po

Outline version	References				European projection	Issue date
	IEC	JEDEC	JEITA			
SOT1202						~~10-04-02~~ 10-04-06

Fig 15. Package outline SOT1202 (XSON6)

All information provided in this document is subject to legal disclaimers.

© Nexperia B.V. 2017. All rights reserved

X2SON5: plastic thermal enhanced extremely thin small outline package; no leads; 5 terminals; body 0.8 x 0.8 x 0.35 mm **SOT1226**

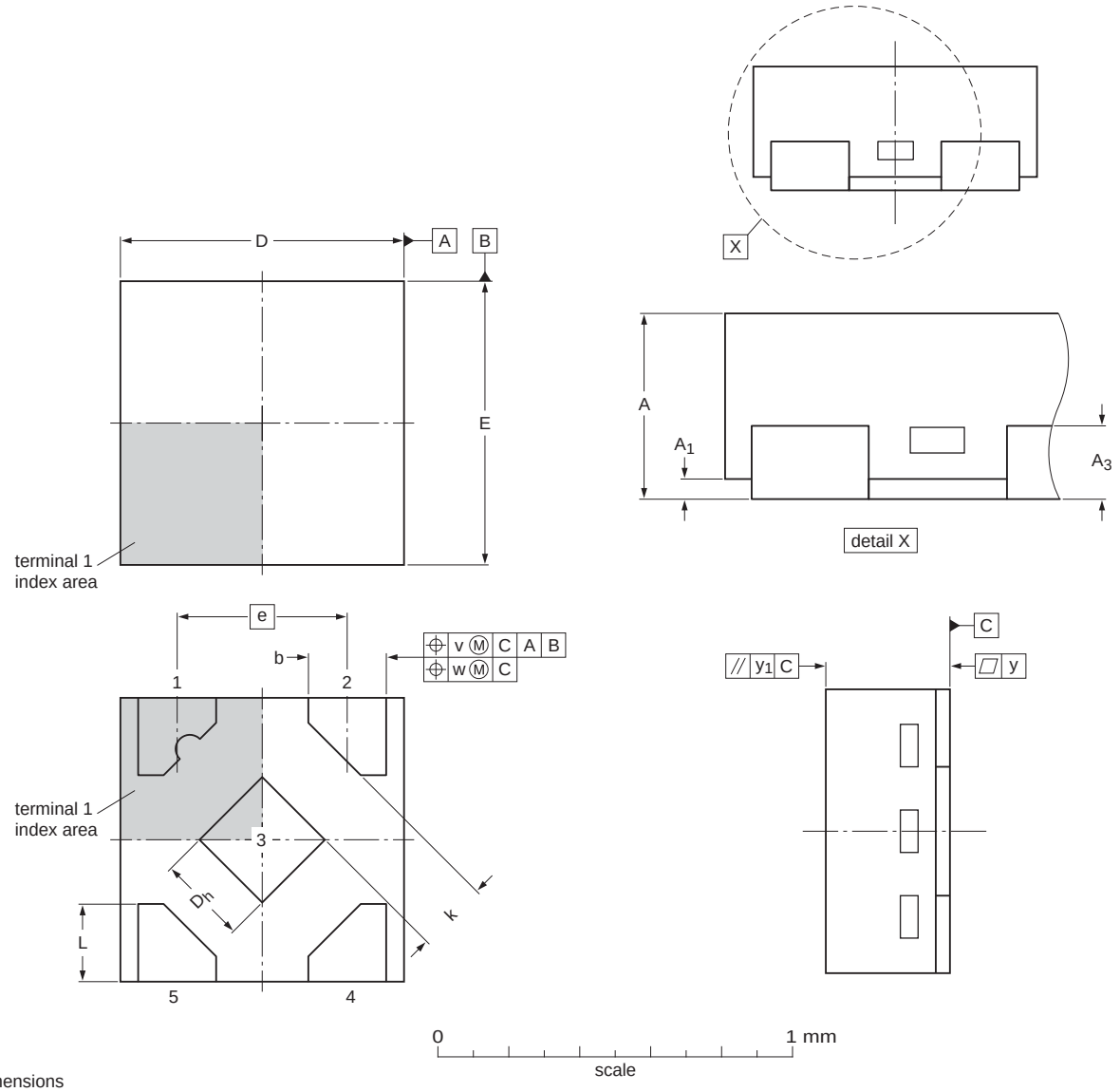

Dimensions

Unit		A(1)	A_1	A_3	D	D_h	E	b	e	k	L	v	w	y	y_1
mm	max	0.35	0.04	0.128	0.85	0.30	0.85	0.27			0.27				
	nom				0.80	0.25	0.80	0.22	0.48		0.22	0.1	0.05	0.05	0.05
	min			0.040	0.75	0.20	0.75	0.17		0.20	0.17				

Note
1. Dimension A is including plating thickness.
2. Plastic or metal protrusions of 0.075 mm maximum per side are not included.

sot1226_po

Outline version	References				European projection	Issue date
	IEC	JEDEC	EIAJ			
SOT1226						~~12-04-10~~ 12-04-25

Fig 16. Package outline SOT1226 (X2SON5)

All information provided in this document is subject to legal disclaimers.

© Nexperia B.V. 2017. All rights reserved

14. Abbreviations

Table 11. Abbreviations

Acronym	Description
CDM	Charged Device Model
DUT	Device Under Test
ESD	ElectroStatic Discharge
HBM	Human Body Model
MM	Machine Model

15. Revision history

Table 12. Revision history

Document ID	Release date	Data sheet status	Change notice	Supersedes
74AUP1G80 v.4	20120628	Product data sheet	-	74AUP1G80 v.3
Modifications:	• Added type number 74AUP1G80GX (SOT1226) • Package outline drawing of SOT886 (Figure 11) modified.			
74AUP1G80 v.3	20111129	Product data sheet	-	74AUP1G80 v.2
Modifications:	• Legal pages updated.			
74AUP1G80 v.2	20100915	Product data sheet	-	74AUP1G80 v.1
74AUP1G80 v.1	20061020	Product data sheet	-	-

All information provided in this document is subject to legal disclaimers.

© Nexperia B.V. 2017. All rights reserved

16. Legal information

16.1 Data sheet status

Document status[1][2]	Product status[3]	Definition
Objective [short] data sheet	Development	This document contains data from the objective specification for product development.
Preliminary [short] data sheet	Qualification	This document contains data from the preliminary specification.
Product [short] data sheet	Production	This document contains the product specification.

[1] Please consult the most recently issued document before initiating or completing a design.

[2] The term 'short data sheet' is explained in section "Definitions".

[3] The product status of device(s) described in this document may have changed since this document was published and may differ in case of multiple devices. The latest product status information is available on the Internet at URL http://www.nexperia.com.

16.2 Definitions

Draft — The document is a draft version only. The content is still under internal review and subject to formal approval, which may result in modifications or additions. Nexperia does not give any representations or warranties as to the accuracy or completeness of information included herein and shall have no liability for the consequences of use of such information.

Short data sheet — A short data sheet is an extract from a full data sheet with the same product type number(s) and title. A short data sheet is intended for quick reference only and should not be relied upon to contain detailed and full information. For detailed and full information see the relevant full data sheet, which is available on request via the local Nexperia sales office. In case of any inconsistency or conflict with the short data sheet, the full data sheet shall prevail.

Product specification — The information and data provided in a Product data sheet shall define the specification of the product as agreed between Nexperia and its customer, unless Nexperia and customer have explicitly agreed otherwise in writing. In no event however, shall an agreement be valid in which the Nexperia product is deemed to offer functions and qualities beyond those described in the Product data sheet.

16.3 Disclaimers

Limited warranty and liability — Information in this document is believed to be accurate and reliable. However, Nexperia does not give any representations or warranties, expressed or implied, as to the accuracy or completeness of such information and shall have no liability for the consequences of use of such information. Nexperia takes no responsibility for the content in this document if provided by an information source outside of Nexperia.

In no event shall Nexperia be liable for any indirect, incidental, punitive, special or consequential damages (including - without limitation - lost profits, lost savings, business interruption, costs related to the removal or replacement of any products or rework charges) whether or not such damages are based on tort (including negligence), warranty, breach of contract or any other legal theory.

Notwithstanding any damages that customer might incur for any reason whatsoever, Nexperia's aggregate and cumulative liability towards customer for the products described herein shall be limited in accordance with the *Terms and conditions of commercial sale* of Nexperia.

Right to make changes — Nexperia reserves the right to make changes to information published in this document, including without limitation specifications and product descriptions, at any time and without notice. This document supersedes and replaces all information supplied prior to the publication hereof.

Suitability for use — Nexperia products are not designed, authorized or warranted to be suitable for use in life support, life-critical or safety-critical systems or equipment, nor in applications where failure or malfunction of a Nexperia product can reasonably be expected to result in personal injury, death or severe property or environmental damage. Nexperia and its suppliers accept no liability for inclusion and/or use of Nexperia products in such equipment or applications and therefore such inclusion and/or use is at the customer's own risk.

Applications — Applications that are described herein for any of these products are for illustrative purposes only. Nexperia makes no representation or warranty that such applications will be suitable for the specified use without further testing or modification.

Customers are responsible for the design and operation of their applications and products using Nexperia products, and Nexperia accepts no liability for any assistance with applications or customer product design. It is customer's sole responsibility to determine whether the Nexperia product is suitable and fit for the customer's applications and products planned, as well as for the planned application and use of customer's third party customer(s). Customers should provide appropriate design and operating safeguards to minimize the risks associated with their applications and products.

Nexperia does not accept any liability related to any default, damage, costs or problem which is based on any weakness or default in the customer's applications or products, or the application or use by customer's third party customer(s). Customer is responsible for doing all necessary testing for the customer's applications and products using Nexperia products in order to avoid a default of the applications and the products or of the application or use by customer's third party customer(s). Nexperia does not accept any liability in this respect.

Limiting values — Stress above one or more limiting values (as defined in the Absolute Maximum Ratings System of IEC 60134) will cause permanent damage to the device. Limiting values are stress ratings only and (proper) operation of the device at these or any other conditions above those given in the Recommended operating conditions section (if present) or the Characteristics sections of this document is not warranted. Constant or repeated exposure to limiting values will permanently and irreversibly affect the quality and reliability of the device.

Terms and conditions of commercial sale — Nexperia products are sold subject to the general terms and conditions of commercial sale, as published at http://www.nexperia.com/profile/terms, unless otherwise agreed in a valid written individual agreement. In case an individual agreement is concluded only the terms and conditions of the respective agreement shall apply. Nexperia hereby expressly objects to applying the customer's general terms and conditions with regard to the purchase of Nexperia products by customer.

No offer to sell or license — Nothing in this document may be interpreted or construed as an offer to sell products that is open for acceptance or the grant, conveyance or implication of any license under any copyrights, patents or other industrial or intellectual property rights.

All information provided in this document is subject to legal disclaimers.

© Nexperia B.V. 2017. All rights reserved

Export control — This document as well as the item(s) described herein may be subject to export control regulations. Export might require a prior authorization from competent authorities.

Non-automotive qualified products — Unless this data sheet expressly states that this specific Nexperia product is automotive qualified, the product is not suitable for automotive use. It is neither qualified nor tested in accordance with automotive testing or application requirements. Nexperia accepts no liability for inclusion and/or use of non-automotive qualified products in automotive equipment or applications.

In the event that customer uses the product for design-in and use in automotive applications to automotive specifications and standards, customer (a) shall use the product without Nexperia's warranty of the product for such automotive applications, use and specifications, and (b) whenever customer uses the product for automotive applications beyond Nexperia's specifications such use shall be solely at customer's own risk, and (c) customer fully indemnifies Nexperia for any liability, damages or failed product claims resulting from customer design and use of the product for automotive applications beyond Nexperia's standard warranty and Nexperia's product specifications.

Translations — A non-English (translated) version of a document is for reference only. The English version shall prevail in case of any discrepancy between the translated and English versions.

16.4 Trademarks

Notice: All referenced brands, product names, service names and trademarks are the property of their respective owners.

17. Contact information

For more information, please visit: **http://www.nexperia.com**

For sales office addresses, please send an email to: **salesaddresses@nexperia.com**

All information provided in this document is subject to legal disclaimers.

© Nexperia B.V. 2017. All rights reserved

18. Contents

1 General description 1
2 Features and benefits 1
3 Ordering information 2
4 Marking 2
5 Functional diagram 2
6 Pinning information 3
6.1 Pinning 3
6.2 Pin description 4
7 Functional description 4
8 Limiting values 4
9 Recommended operating conditions 5
10 Static characteristics 5
11 Dynamic characteristics 8
12 Waveforms 11
13 Package outline 13
14 Abbreviations 19
15 Revision history 19
16 Legal information 20
16.1 Data sheet status 20
16.2 Definitions 20
16.3 Disclaimers 20
16.4 Trademarks 21
17 Contact information 21
18 Contents 22

© Nexperia B.V. 2017. All rights reserved

For more information, please visit: http://www.nexperia.com
For sales office addresses, please send an email to: salesaddresses@nexperia.com
Date of release: 28 June 2012