REV.	ECN NO.	DATE	SIGN	DESCRIPTION
C	LEN13C0107	2013/12/11	Sam	Change Dimension
D	LEN1630528	2016/03/17	Ruru	Change Logo
E	C190310	2019/03/08	Ruru	Modify Note

ALTW
CONFIDENTIAL
2019-03-08
R&D DEPT.

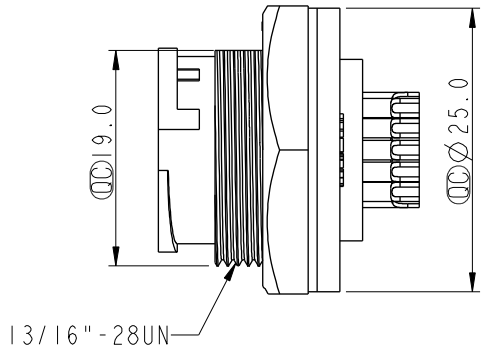

Note: E
* QC Important Dimension To Check.
* Waterproof Rate: IP67, Unmated
* Housing: Thermoplastic, Black
* Pin: Copper Alloy, Gold Plated
* Nut: Thermoplastic, Black
* Gasket: Rubber, Black
B * Use with waterproof cap or dust cap
  Panel Thickness Max: 3.0mm
B * Use without waterproof cap or dust cap
  Panel Thickness Max: 4.0mm
* Gasket and Nut are packed separately in PE bags.

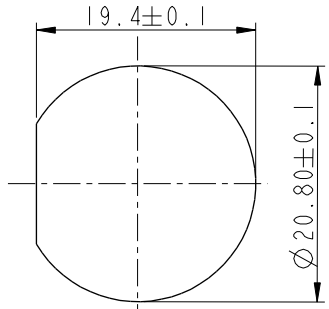

Recommended Panel Cut-Out

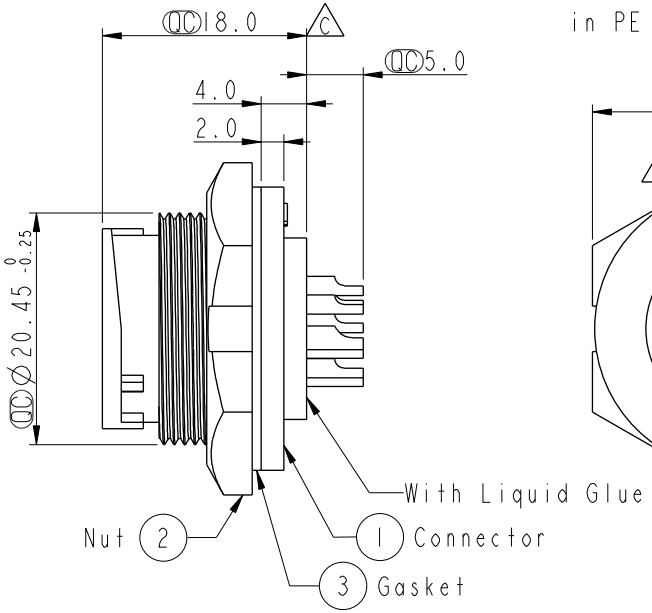

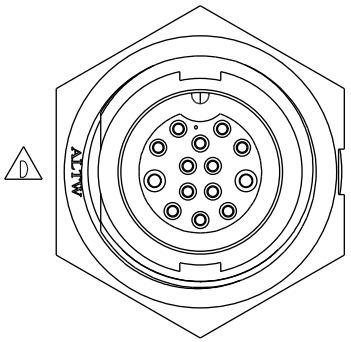

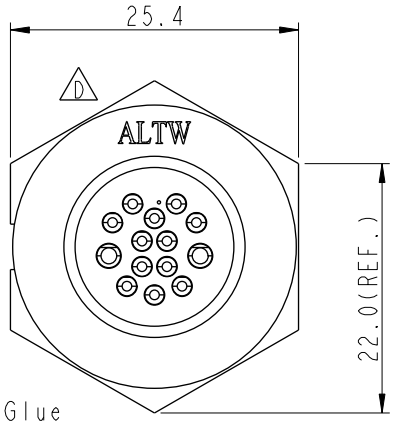

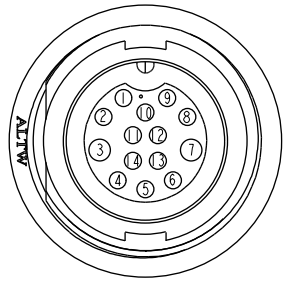

Pin Assignments
Front View

UNIT: mm

TOLERANCE
.X ±0.25
.XX ±0.1
.XXX ±0.05
ANGLES ±1°

TITLE	Middle Panel Lock 14Pin M Conn F Pin		
SCALE 1:1	SIZE A4	SHEET 1 OF 1	
REV. E	WC-REV. A.3	QC: Inspection item	

Amphenol LTW
安費諾亮泰企業股份有限公司

ITEM NO CDU-14PMFS-LC7001	DRAWN BY Ruru	DATE 2019-03-08
DWG NO CDU-14PMFS-LC7001	CHECKED BY Rita	DATE 2019-03-08
CUSTOMER ALTW	APPROVED BY Max	DATE 2019-03-08

W10814-03-RM01A2

THIS DOCUMENT IS SUBJECT TO CHANGE WITHOUT NOTICE. IT IS CONFIDENTIAL AND A PROPERTY OF Amphenol LTW. DISCLOSURE TO THIRD PARTY HAS TO BE AUTHORIZED BY Amphenol LTW.