E134345

HDMI(TM):KMDMIX Series
Mini Connector, Right Angle SMT HDMI(TM)

Product Features
Supports Deep Color over HDMI(TM)
19 Position Receptacle
Smaller, More Compact Form Than The Traditional HDMI(TM) Counterpart
Provides Low Impedance Mismatch

Performance Specifications
Materials and Finish
Housing
High Temp Thermoplastic, UL94V-0 Rated, Color Black
Contacts
Phosphor Bronze
Shield
Nickel Plated
Plating
Standard - 30µ" Gold in Front Contacts and
Gold Flash in Solder Area

Electrical Characteristics
Rated Voltage
40V AC (RMS)
Rated Current
0.5Amps Min.
Contact Resistance
10 milliohms Max.
Insulation Resistance
100 Megohms Min.
Dielectric Withstanding Voltage
500V AC RMS for 1 Min.

Mechanical Characteristics
Durability
10000 Mating Cycles Min.
Operating Temperature
-25°C to +85°C

2D Drawing	IGES	STEP	3D PDF
Solder Profile	CofC RoHS Compliant	CofC REACH Compliant	UL Plastic File
Certificate of Origin	Check Stock	Request a Sample	Send Us An Email

Generated Part Number

KMDMIX-NS3A-WS-BTR

Part Number Builder

KMDMIX	–	NS3	A	WS	B	TR
Series		Shield Option	Boardlock Option	Top Spring	Insulator Option	Packaging Option

Series
KMDMIX - HDMI(TM) Mini Connector

Shield Option
NS3 - Vertical SMT Shield Tabs, Flange

Boardlock Option
A - Standard Straight B - Indented

Top Spring
WS - With Top Spring

Insulator Option
B - Black

Packaging Option
TR - Tape and Reel

Contact Kycon for Other Options

KMDMIX-NS3
Dimensions in mm
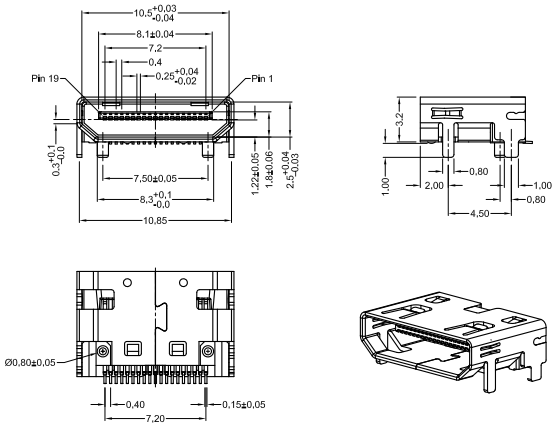
KMDMIX-NS3X-WS-BTR