447-426
EMI/RFI Non-Environmental Band-in-a-Can Backshell
with Cable Clamp Strain-Relief
Direct Coupling - Standard Profile

447 F S 426 NF 16 12-8 K P

- Product Series
- Connector Designator
- Angle and Profile
  - H = 45°
  - J = 90°
  - S = Straight
- Basic Part No.
- Finish (Table II)
- Polysulfide (Omit for none)
- B = Band
  K = Precoiled Band
  (Omit for none)
- Length: S only
  (1/2 inch increments,
  e.g. 8 = 4.000 inches)
- Cable Entry (Table V)
- Shell Size (Table I)

CONNECTOR DESIGNATORS

A-B*-C-D-E-F
G-H-J-K-L-S

*** Conn. Desig. B See Note 4**

DIRECT COUPLING

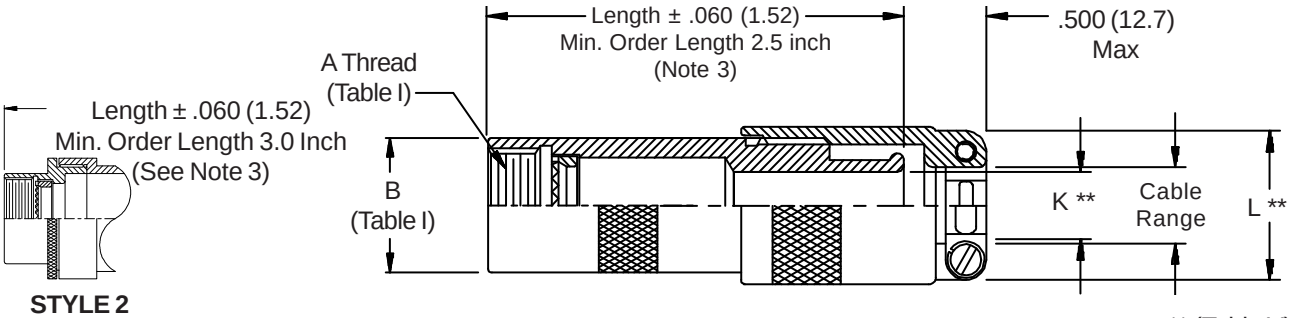

STYLE 2
(STRAIGHT
See Note 1)

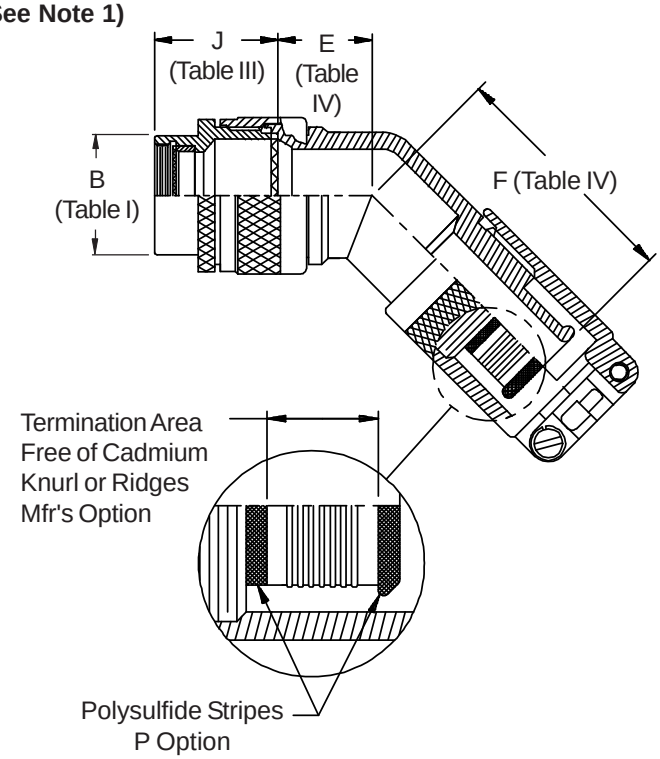

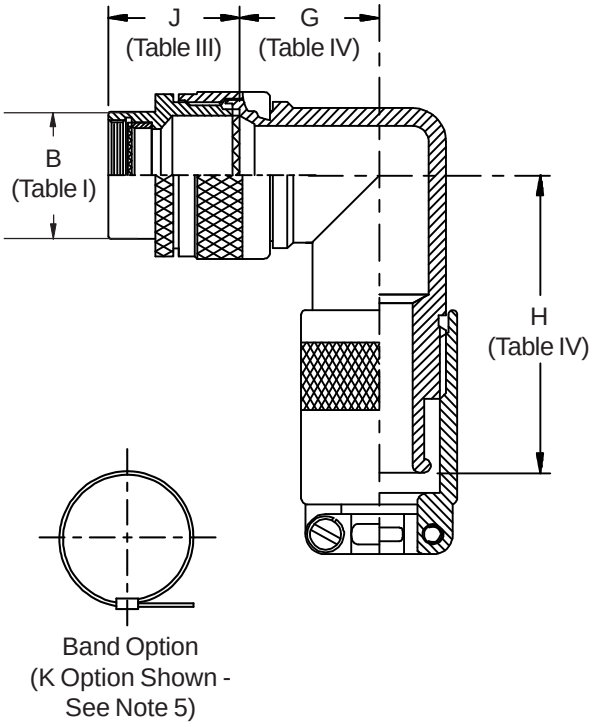

© 2005 Glenair, Inc. CAGE Code 06324 Printed in U.S.A.

447-426
EMI/RFI Non-Environmental Band-in-a-Can Backshell
with Cable Clamp Strain-Relief
Direct Coupling - Standard Profile

See inside back cover fold-out or
pages 13 and 14 for Tables I and II.

TABLE III: FRONT ADAPTER

Shell Size	J Max - Conn. Designator A-E-F J-H-L-S	D-B-G-K	C
08/09	1.180 (30.0)	1.250 (31.8)	
10/11	1.180 (30.0)	1.250 (31.8)	
12/13	1.180 (30.0)	1.250 (31.8)	1.735 (44.1)
14/15	1.180 (30.0)	1.250 (31.8)	1.915 (48.6)
16/17	1.380 (35.0)	1.560 (39.6)	1.915 (48.6)
18/19	1.380 (35.0)	1.560 (39.6)	1.915 (48.6)
20/21	1.380 (35.0)	1.560 (39.6)	1.915 (48.6)
22/23	1.380 (35.0)	1.560 (39.6)	1.915 (48.6)
24/25	1.380 (35.0)	1.560 (39.6)	1.915 (48.6)
28/29	1.610 (40.9)	1.560 (39.6)	1.915 (48.6)
32/33	1.610 (40.9)	1.750 (44.5)	1.915 (48.6)
36	1.610 (40.9)	1.750 (44.5)	1.915 (48.6)
40	1.610 (40.9)	2.190 (55.6)	1.915 (48.6)

TABLE IV: ELBOW DIMENSIONS

Elbow Size	E Max		F Max		G Max		H Max	
10/12	.664	(16.9)	1.410	(35.8)	.810	(20.6)	1.550	(39.4)
14	.688	(17.5)	1.430	(36.3)	.870	(22.1)	1.610	(40.9)
16/18	.732	(18.6)	1.480	(37.6)	.980	(24.9)	1.740	(44.2)
20	.748	(19.0)	1.490	(37.8)	1.020	(25.9)	1.760	(44.7)
22	.773	(19.6)	1.510	(38.4)	1.080	(27.4)	1.820	(46.2)
24	.800	(20.3)	1.550	(39.4)	1.140	(29.0)	1.900	(48.3)
28	.823	(20.9)	1.580	(40.1)	1.200	(30.5)	1.970	(50.0)
32	1.041	(26.4)	1.750	(44.5)	1.480	(37.6)	2.210	(56.1)

TABLE V: CABLE RANGE

Dash No.	K ±.030	±(.8)	L Max		Cable Range Min		Max	
10	.220	(5.6)	1.000	(25.4)	.130	(3.3)	.250	(6.4)
12	.310	(7.9)	1.250	(31.8)	.250	(6.4)	.380	(9.7)
14	.440	(11.2)	1.340	(34.0)	.310	(7.9)	.440	(11.2)
16	.560	(14.2)	1.470	(37.3)	.375	(9.5)	.630	(16.0)
18	.630	(16.0)	1.560	(39.6)	.560	(14.2)	.690	(17.5)
20	.750	(19.1)	1.620	(41.1)	.630	(16.0)	.750	(19.1)
22	.880	(22.4)	1.750	(44.5)	.750	(19.1)	.880	(22.4)
24	1.000	(25.4)	1.870	(47.5)	.880	(22.4)	1.000	(25.4)
28	1.060	(26.9)	1.970	(50.0)	1.000	(25.4)	1.130	(28.7)
32	1.190	(30.2)	2.090	(53.1)	1.130	(28.7)	1.250	(31.8)

1. When maximum cable entry (page 22) is exceeded, Style 2 will be supplied. (Function S only).
2. Metric dimensions (mm) are indicated in parentheses.
3. Consult factory for shorter lengths on straight backshells.
4. When using Connector Designator B refer to pages 18 and 19 for part number development.
5. Backshells supplied with 600-052-* band, see Glenair Series 600 Tool Catalog for installation.

© 2005 Glenair, Inc. CAGE Code 06324 Printed in U.S.A.