74AHC374; 74AHCT374

Octal D-type flip-flop; positive edge-trigger; 3-state

Rev. 03 — 12 June 2008 Product data sheet

1. General description

The 74AHC374; 74AHCT374 is a high-speed Si-gate CMOS device and is pin compatible with Low-power Schottky TTL (LSTTL). It is specified in compliance with JEDEC standard No. 7-A.

The 74AHC374; 74AHCT374 comprises eight D-type flip-flops featuring separate D-type inputs for each flip-flop and 3-state outputs for bus oriented applications. A clock input (CP) and an output enable input ($\overline{OE}$) are common to all flip-flops.

The eight flip-flops will store the state of their individual D inputs that meet the set-up and hold times requirements for the LOW-to-HIGH CP transition.

When $\overline{OE}$ is LOW the content of the eight flip-flops is available at the outputs. When $\overline{OE}$ is HIGH, the outputs go to the high-impedance OFF-state. Operation of the $\overline{OE}$ input does not affect the state of the flip-flops.

2. Features

- Balanced propagation delays
- All inputs have Schmitt-trigger actions
- Inputs accept voltages higher than V_{CC}
- Common 3-state output enable input
- Input levels:
  - For 74AHC374: CMOS level
  - For 74AHCT374: TTL level
- ESD protection:
  - HBM EIA/JESD22-A114E exceeds 2000 V
  - MM EIA/JESD22-A115-A exceeds 200 V
  - CDM EIA/JESD22-C101C exceeds 1000 V
- Multiple package options
- Specified from –40 °C to +85 °C and from –40 °C to +125 °C

3. Ordering information

Table 1. Ordering information

Type number	Package			
	Temperature range	Name	Description	Version
74AHC374				
74AHC374D	–40 °C to +125 °C	SO20	plastic small outline package; 20 leads; body width 7.5 mm	SOT163-1
74AHC374PW	–40 °C to +125 °C	TSSOP20	plastic thin shrink small outline package; 20 leads; body width 4.4 mm	SOT360-1
74AHCT374				
74AHCT374D	–40 °C to +125 °C	SO20	plastic small outline package; 20 leads; body width 7.5 mm	SOT163-1
74AHCT374PW	–40 °C to +125 °C	TSSOP20	plastic thin shrink small outline package; 20 leads; body width 4.4 mm	SOT360-1

4. Functional diagram

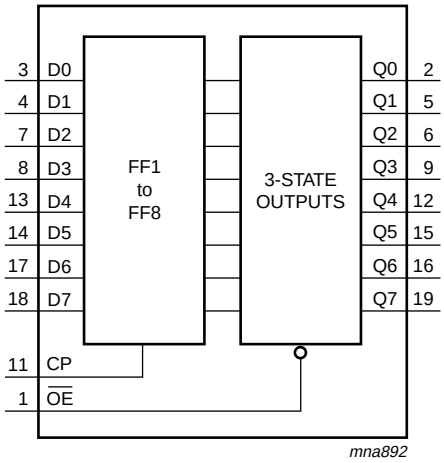

Fig 1. Functional diagram

© Nexperia B.V. 2017. All rights reserved

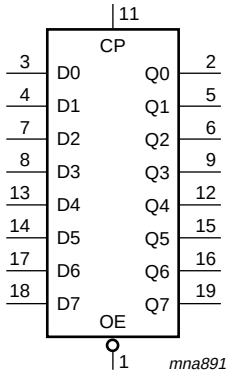

Fig 2. Logic symbol

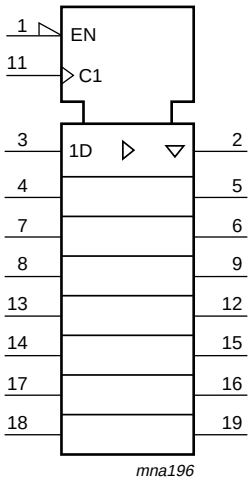

Fig 3. IEC logic symbol

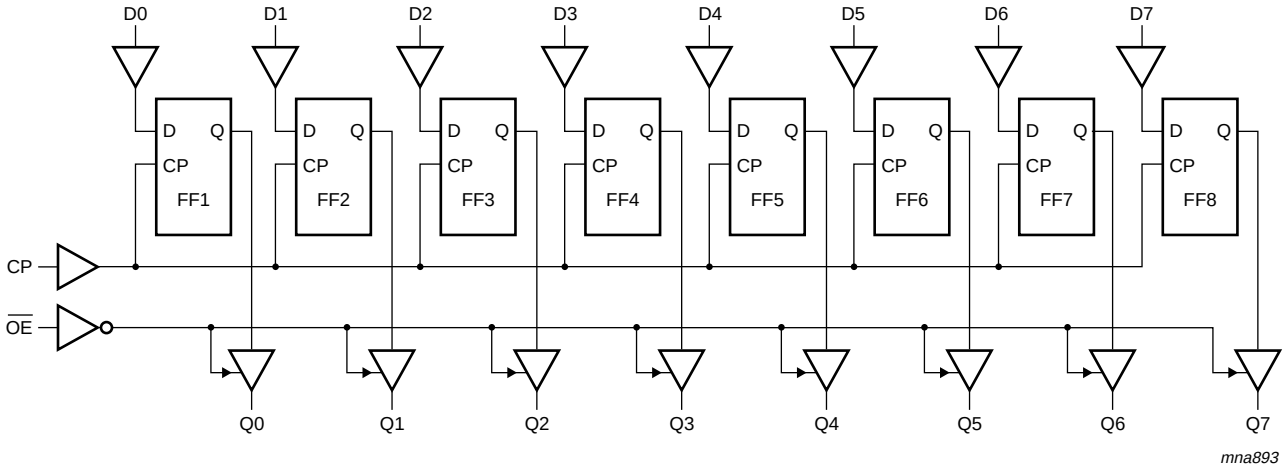

Fig 4. Logic diagram

© Nexperia B.V. 2017. All rights reserved

5. Pinning information

5.1 Pinning

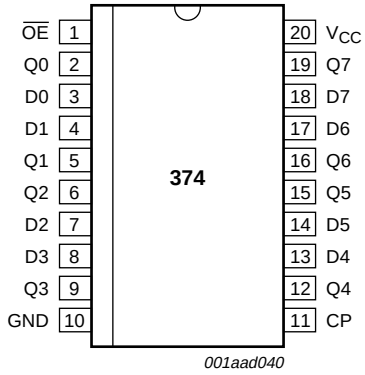

Fig 5. Pin configuration SO20 and TSSOP20

5.2 Pin description

Table 2. Pin description

Symbol	Pin	Description
$\overline{OE}$	1	3-state output enable input (active LOW)
Q0	2	3-state flip-flop output
D0	3	data input
D1	4	data input
Q1	5	3-state flip-flop output
Q2	6	3-state flip-flop output
D2	7	data input
D3	8	data input
Q3	9	3-state flip-flop output
GND	10	ground (0 V)
CP	11	clock input (LOW-to-HIGH, edge triggered)
Q4	12	3-state flip-flop output
D4	13	data input
D5	14	data input
Q5	15	3-state flip-flop output
Q6	16	3-state flip-flop output
D6	17	data input
D7	18	data input
Q7	19	3-state flip-flop output
V_{CC}	20	supply voltage

© Nexperia B.V. 2017. All rights reserved

6. Functional description

Table 3. Function table[1]

Operating mode	Control		Input	Internal flip-flop	Output
	$\overline{OE}$	CP	Dn		Q0 to Q7
Load and read register	L	↑	l	L	L
	L	↑	h	H	H
Load register and disable outputs	H	↑	l	L	Z
	H	↑	h	H	Z

[1] H = HIGH voltage level;
h = HIGH voltage level one setup time prior to the LOW-to-HIGH CP transition;
L = LOW voltage level;
l = LOW voltage level one setup time prior to the LOW-to-HIGH CP transition;
X = don't care;
↑ = LOW-to-HIGH CP transition;
Z = high-impedance OFF-state.

7. Limiting values

Table 4. Limiting values

In accordance with the Absolute Maximum Rating System (IEC 60134). Voltages are referenced to GND (ground = 0 V).

Symbol	Parameter	Conditions		Min	Max	Unit
V_{CC}	supply voltage			–0.5	+7.0	V
V_I	input voltage			–0.5	+7.0	V
I_{IK}	input clamping current	V_I < –0.5 V	[1]	–20	-	mA
I_{OK}	output clamping current	V_O < –0.5 V or V_O > V_{CC} + 0.5 V	[1]	–20	+20	mA
I_O	output current	V_O = –0.5 V to (V_{CC} + 0.5 V)		–25	+25	mA
I_{CC}	supply current			-	+75	mA
I_{GND}	ground current			–75	-	mA
T_{stg}	storage temperature			–65	+150	°C
P_{tot}	total power dissipation	T_{amb} = –40 °C to +125 °C	[2]	-	500	mW

[1] The input and output voltage ratings may be exceeded if the input and output current ratings are observed.

[2] For SO20 packages: above 70 °C the value of P_{tot} derates linearly at 8 mW/K.
For TSSOP20 packages: above 60 °C the value of P_{tot} derates linearly at 5.5 mW/K.

© Nexperia B.V. 2017. All rights reserved

8. Recommended operating conditions

Table 5. Operating conditions

Symbol	Parameter	Conditions	Min	Typ	Max	Unit
74AHC374						
V_{CC}	supply voltage		2.0	5.0	5.5	V
V_I	input voltage		0	-	5.5	V
V_O	output voltage		0	-	V_{CC}	V
T_{amb}	ambient temperature		–40	+25	+125	°C
$\Delta t/\Delta V$	input transition rise and fall rate	V_{CC} = 3.0 V to 3.6 V	-	-	100	ns/V
		V_{CC} = 4.5 V to 5.5 V	-	-	20	ns/V
74AHCT374						
V_{CC}	supply voltage		4.5	5.0	5.5	V
V_I	input voltage		0	-	5.5	V
V_O	output voltage		0	-	V_{CC}	V
T_{amb}	ambient temperature		–40	+25	+125	°C
$\Delta t/\Delta V$	input transition rise and fall rate	V_{CC} = 4.5 V to 5.5 V	-	-	20	ns/V

9. Static characteristics

Table 6. Static characteristics

At recommended operating conditions; voltages are referenced to GND (ground = 0 V).

Symbol	Parameter	Conditions	25 °C			–40 °C to +85 °C		–40 °C to +125 °C		Unit
			Min	Typ	Max	Min	Max	Min	Max	
74AHC374										
V_{IH}	HIGH-level input voltage	V_{CC} = 2.0 V	1.5	-	-	1.5	-	1.5	-	V
		V_{CC} = 3.0 V	2.1	-	-	2.1	-	2.1	-	V
		V_{CC} = 5.5 V	3.85	-	-	3.85	-	3.85	-	V
V_{IL}	LOW-level input voltage	V_{CC} = 2.0 V	-	-	0.5	-	0.5	-	0.5	V
		V_{CC} = 3.0 V	-	-	0.9	-	0.9	-	0.9	V
		V_{CC} = 5.5 V	-	-	1.65	-	1.65	-	1.65	V
V_{OH}	HIGH-level output voltage	$V_I = V_{IH}$ or V_{IL}								
		I_O = –50 μA; V_{CC} = 2.0 V	1.9	2.0	-	1.9	-	1.9	-	V
		I_O = –50 μA; V_{CC} = 3.0 V	2.9	3.0	-	2.9	-	2.9	-	V
		I_O = –50 μA; V_{CC} = 4.5 V	4.4	4.5	-	4.4	-	4.4	-	V
		I_O = –4.0 mA; V_{CC} = 3.0 V	2.58	-	-	2.48	-	2.40	-	V
		I_O = –8.0 mA; V_{CC} = 4.5 V	3.94	-	-	3.80	-	3.70	-	V
V_{OL}	LOW-level output voltage	$V_I = V_{IH}$ or V_{IL}								
		I_O = 50 μA; V_{CC} = 2.0 V	-	0	0.1	-	0.1	-	0.1	V
		I_O = 50 μA; V_{CC} = 3.0 V	-	0	0.1	-	0.1	-	0.1	V
		I_O = 50 μA; V_{CC} = 4.5 V	-	0	0.1	-	0.1	-	0.1	V
		I_O = 4.0 mA; V_{CC} = 3.0 V	-	-	0.36	-	0.44	-	0.55	V
		I_O = 8.0 mA; V_{CC} = 4.5 V	-	-	0.36	-	0.44	-	0.55	V

© Nexperia B.V. 2017. All rights reserved

Table 6. Static characteristics *...continued*

At recommended operating conditions; voltages are referenced to GND (ground = 0 V).

Symbol	Parameter	Conditions	25 °C			–40 °C to +85 °C		–40 °C to +125 °C		Unit
			Min	Typ	Max	Min	Max	Min	Max	
I_I	input leakage current	V_I = 5.5 V or GND; V_{CC} = 0 V to 5.5 V	-	-	0.1	-	1.0	-	2.0	μA
I_{OZ}	OFF-state output current	$V_I = V_{IH}$ or V_{IL}; $V_O = V_{CC}$ or GND; V_{CC} = 5.5 V	-	-	±0.25	-	±2.5	-	±10.0	μA
I_{CC}	supply current	$V_I = V_{CC}$ or GND; I_O = 0 A; V_{CC} = 5.5 V	-	-	4.0	-	40	-	80	μA
C_I	input capacitance	$V_I = V_{CC}$ or GND	-	3	10	-	10	-	10	pF
C_O	output capacitance		-	4	-	-	-	-	-	pF
74AHCT374										
V_{IH}	HIGH-level input voltage	V_{CC} = 4.5 V to 5.5 V	2.0	-	-	2.0	-	2.0	-	V
V_{IL}	LOW-level input voltage	V_{CC} = 4.5 V to 5.5 V	-	-	0.8	-	0.8	-	0.8	V
V_{OH}	HIGH-level output voltage	$V_I = V_{IH}$ or V_{IL}; V_{CC} = 4.5 V								
		I_O = –50 μA	4.4	4.5	-	4.4	-	4.4	-	V
		I_O = –8.0 mA	3.94	-	-	3.80	-	3.70	-	V
V_{OL}	LOW-level output voltage	$V_I = V_{IH}$ or V_{IL}; V_{CC} = 4.5 V								
		I_O = 50 μA	-	0	0.1	-	0.1	-	0.1	V
		I_O = 8.0 mA	-	-	0.36	-	0.44	-	0.55	V
I_I	input leakage current	V_I = 5.5 V or GND; V_{CC} = 0 V to 5.5 V	-	-	0.1	-	1.0	-	2.0	μA
I_{OZ}	OFF-state output current	$V_I = V_{IH}$ or V_{IL}; $V_O = V_{CC}$ or GND per input pin; other inputs at V_{CC} or GND; I_O = 0 A; V_{CC} = 5.5 V	-	-	±0.25	-	±2.5	-	±10.0	μA
I_{CC}	supply current	$V_I = V_{CC}$ or GND; I_O = 0 A; V_{CC} = 5.5 V	-	-	4.0	-	40	-	80	μA
ΔI_{CC}	additional supply current	per input pin; $V_I = V_{CC}$ – 2.1 V; other pins at V_{CC} or GND; I_O = 0 A; V_{CC} = 4.5 V to 5.5 V	-	-	1.35	-	1.5	-	1.5	mA
C_I	input capacitance	$V_I = V_{CC}$ or GND	-	3	10	-	10	-	10	pF
C_O	output capacitance		-	4	-	-	-	-	-	pF

© Nexperia B.V. 2017. All rights reserved

10. Dynamic characteristics

Table 7. Dynamic characteristics

Voltages are referenced to GND (ground = 0 V); for test circuit see Figure 9.

Symbol	Parameter	Conditions		25 °C			−40 °C to +85 °C		−40 °C to +125 °C		Unit
				Min	Typ[1]	Max	Min	Max	Min	Max	
74AHC374											
t_{pd}	propagation delay	CP to Qn; see Figure 6 and Figure 8	[2]								
		V_{CC} = 3.0 V to 3.6 V									
		C_L = 15 pF		-	6.4	12.7	1.0	15.0	1.0	16.0	ns
		C_L = 50 pF		-	8.4	16.2	1.0	18.5	1.0	20.5	ns
		V_{CC} = 4.5 V to 5.5 V									
		C_L = 15 pF		-	4.4	8.1	1.0	9.5	1.0	10.0	ns
		C_L = 50 pF		-	5.7	10.1	1.0	11.5	1.0	12.5	ns
t_{en}	enable time	$\overline{OE}$ to Qn; see Figure 7	[3]								
		V_{CC} = 3.0 V to 3.6 V									
		C_L = 15 pF		-	5.5	11.0	1.0	13.0	1.0	14.0	ns
		C_L = 50 pF		-	7.3	14.5	1.0	16.5	1.0	18.0	ns
		V_{CC} = 4.5 V to 5.5 V									
		C_L = 15 pF		-	3.9	7.6	1.0	9.0	1.0	9.5	ns
		C_L = 50 pF		-	5.2	9.6	1.0	11.0	1.0	12.0	ns
t_{dis}	disable time	$\overline{OE}$ to Qn; see Figure 7	[4]								
		V_{CC} = 3.0 V to 3.6 V									
		C_L = 15 pF		-	5.6	10.5	1.0	12.5	1.0	13.0	ns
		C_L = 50 pF		-	9.4	14.0	1.0	16.0	1.0	17.5	ns
		V_{CC} = 4.5 V to 5.5 V									
		C_L = 15 pF		-	4.2	6.8	1.0	8.0	1.0	8.5	ns
		C_L = 50 pF		-	6.4	8.8	1.0	10.0	1.0	11.0	ns
f_{max}	maximum frequency	see Figure 6									
		V_{CC} = 3.0 V to 3.6 V									
		C_L = 15 pF		80	130	-	70	-	70	-	MHz
		C_L = 50 pF		55	85	-	50	-	50	-	MHz
		V_{CC} = 4.5 V to 5.5 V									
		C_L = 15 pF		130	185	-	110	-	110	-	MHz
		C_L = 50 pF		85	120	-	75	-	75	-	MHz
t_W	pulse width	CP HIGH or LOW; see Figure 6									
		V_{CC} = 3.0 V to 3.6 V		5.0	-	-	5.5	-	5.5	-	ns
		V_{CC} = 4.5 V to 5.5 V		5.0	-	-	5.0	-	5.0	-	ns
t_{su}	set-up time	Dn to CP; see Figure 8									
		V_{CC} = 3.0 V to 3.6 V		4.5	-	-	4.0	-	4.0	-	ns
		V_{CC} = 4.5 V to 5.5 V		3.0	-	-	3.0	-	3.0	-	ns

© Nexperia B.V. 2017. All rights reserved

Table 7. Dynamic characteristics *...continued*

Voltages are referenced to GND (ground = 0 V); for test circuit see Figure 9.

Symbol	Parameter	Conditions		25 °C			–40 °C to +85 °C		–40 °C to +125 °C		Unit
				Min	Typ[1]	Max	Min	Max	Min	Max	
t_h	hold time	Dn to CP; see Figure 8									
		V_{CC} = 3.0 V to 3.6 V		2.0	-	-	2.0	-	2.0	-	ns
		V_{CC} = 4.5 V to 5.5 V		2.0	-	-	2.0	-	2.0	-	ns
C_{PD}	power dissipation capacitance	f_i = 1 MHz; V_I = GND to V_{CC}	[5]	-	10	-	-	-	-	-	pF
74AHCT374; V_{CC} = 4.5 V to 5.5 V											
t_{pd}	propagation delay	CP to Qn; see Figure 6 and Figure 8	[2]								
		C_L = 15 pF		-	4.3	9.4	1.0	10.5	1.0	12.0	ns
		C_L = 50 pF		-	5.6	10.4	1.0	11.5	1.0	13.0	ns
t_{en}	enable time	$\overline{OE}$ to Qn; see Figure 7	[3]								
		C_L = 15 pF		-	3.5	10.2	1.0	11.5	1.0	13.0	ns
		C_L = 50 pF		-	4.8	11.2	1.0	12.5	1.0	14.0	ns
t_{dis}	disable time	$\overline{OE}$ to Qn; see Figure 7	[4]								
		C_L = 15 pF		-	3.6	10.2	1.0	11.0	1.0	13.0	ns
		C_L = 50 pF		-	5.7	11.2	1.0	12.0	1.0	14.0	ns
f_{max}	maximum frequency	see Figure 6									
		C_L = 15 pF		90	140	-	80	-	80	-	MHz
		C_L = 50 pF		85	130	-	75	-	75	-	MHz
t_W	pulse width	CP HIGH or LOW; see Figure 6		6.5	-	-	6.5	-	6.5	-	ns
t_{su}	set-up time	Dn to CP; see Figure 8		2.5	-	-	2.5	-	2.5	-	ns
t_h	hold time	Dn to CP; see Figure 8		2.5	-	-	2.5	-	2.5	-	ns
C_{PD}	power dissipation capacitance	f_i = 1 MHz; V_I = GND to V_{CC}	[5]	-	12	-	-	-	-	-	pF

[1] Typical values are measured at nominal supply voltage (V_{CC} = 3.3 V and V_{CC} = 5.0 V).

[2] t_{pd} is the same as t_{PLH} and t_{PHL}.

[3] t_{en} is the same as t_{PZH} and t_{PZL}.

[4] t_{dis} is the same as t_{PHZ} and t_{PLZ}.

[5] C_{PD} is used to determine the dynamic power dissipation (P_D in μW).
$P_D = C_{PD} \times V_{CC}^2 \times f_i \times N + \Sigma(C_L \times V_{CC}^2 \times f_o)$ where:
f_i = input frequency in MHz;
f_o = output frequency in MHz;
C_L = output load capacitance in pF;
V_{CC} = supply voltage in V;
N = number of inputs switching;
$\Sigma(C_L \times V_{CC}^2 \times f_o)$ = sum of the outputs.

© Nexperia B.V. 2017. All rights reserved

10.1 Waveforms

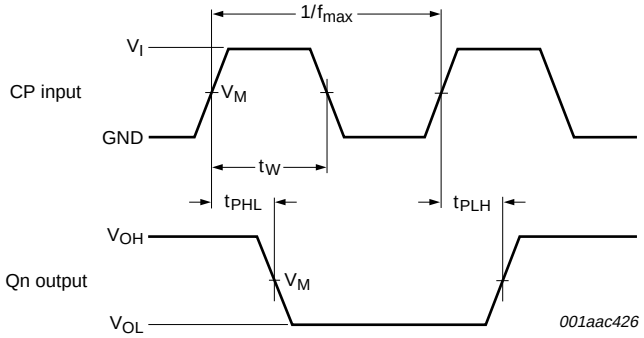

Measurement points are given in Table 8.

V_{OL} and V_{OH} are typical voltage output levels that occur with the output load.

Fig 6. Clock pulse width, maximum frequency and input to output propagation delays

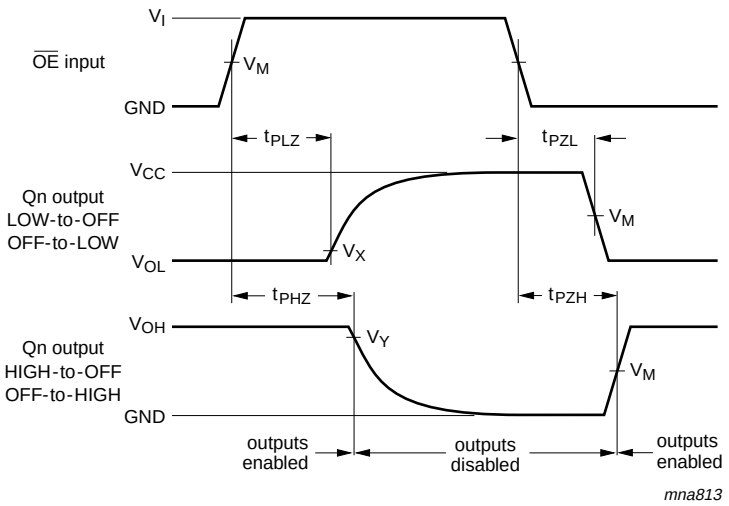

Measurement points are given in Table 8.

V_{OL} and V_{OH} are typical voltage output levels that occur with the output load.

Fig 7. Enable and disable times

© Nexperia B.V. 2017. All rights reserved

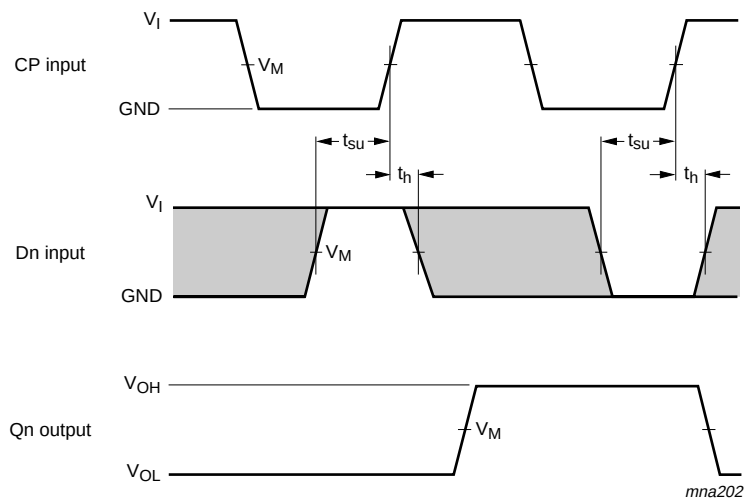

Measurement points are given in Table 8.

The shaded areas indicate when the input is permitted to change for predictable output performance.

V_{OL} and V_{OH} are typical voltage output levels that occur with the output load.

Fig 8. Data set-up and hold times

Table 8. Measurement points

Type	Input	Output		
	V_M	V_M	V_X	V_Y
74AHC374	$0.5 \times V_{CC}$	$0.5 \times V_{CC}$	V_{OL} + 0.3 V	V_{OH} – 0.3 V
74AHCT374	1.5 V	$0.5 \times V_{CC}$	V_{OL} + 0.3 V	V_{OH} – 0.3 V

© Nexperia B.V. 2017. All rights reserved

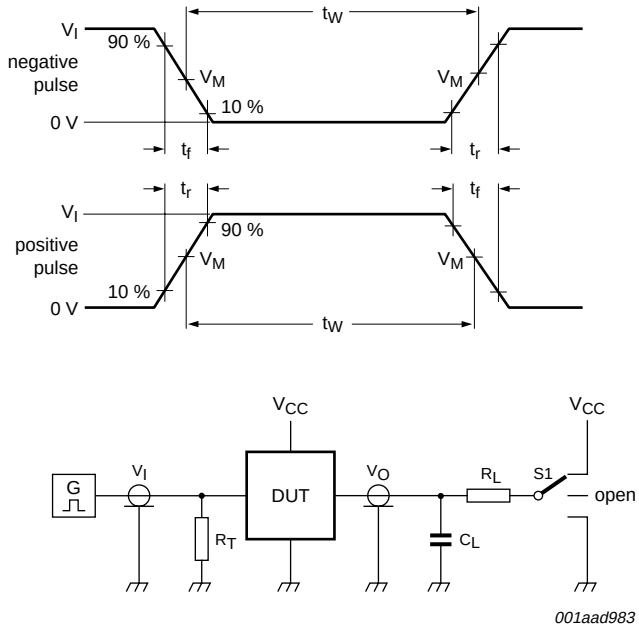

Test data is given in Table 9.

Definitions test circuit:

R_T = termination resistance should be equal to output impedance Z_o of the pulse generator.

C_L = load capacitance including jig and probe capacitance.

R_L = load resistance.

S1 = test selection switch.

Fig 9. Test circuitry for measuring switching times

Table 9. Test data

Type	Input		Load		S1 position		
	V_I	t_r, t_f	C_L	R_L	t_{PHL}, t_{PLH}	t_{PZH}, t_{PHZ}	t_{PZL}, t_{PLZ}
74AHC374	V_{CC}	≤ 3.0 ns	15 pF, 50 pF	1 kΩ	open	GND	V_{CC}
74AHCT374	3.0 V	≤ 3.0 ns	15 pF, 50 pF	1 kΩ	open	GND	V_{CC}

© Nexperia B.V. 2017. All rights reserved

11. Package outline

SO20: plastic small outline package; 20 leads; body width 7.5 mm **SOT163-1**

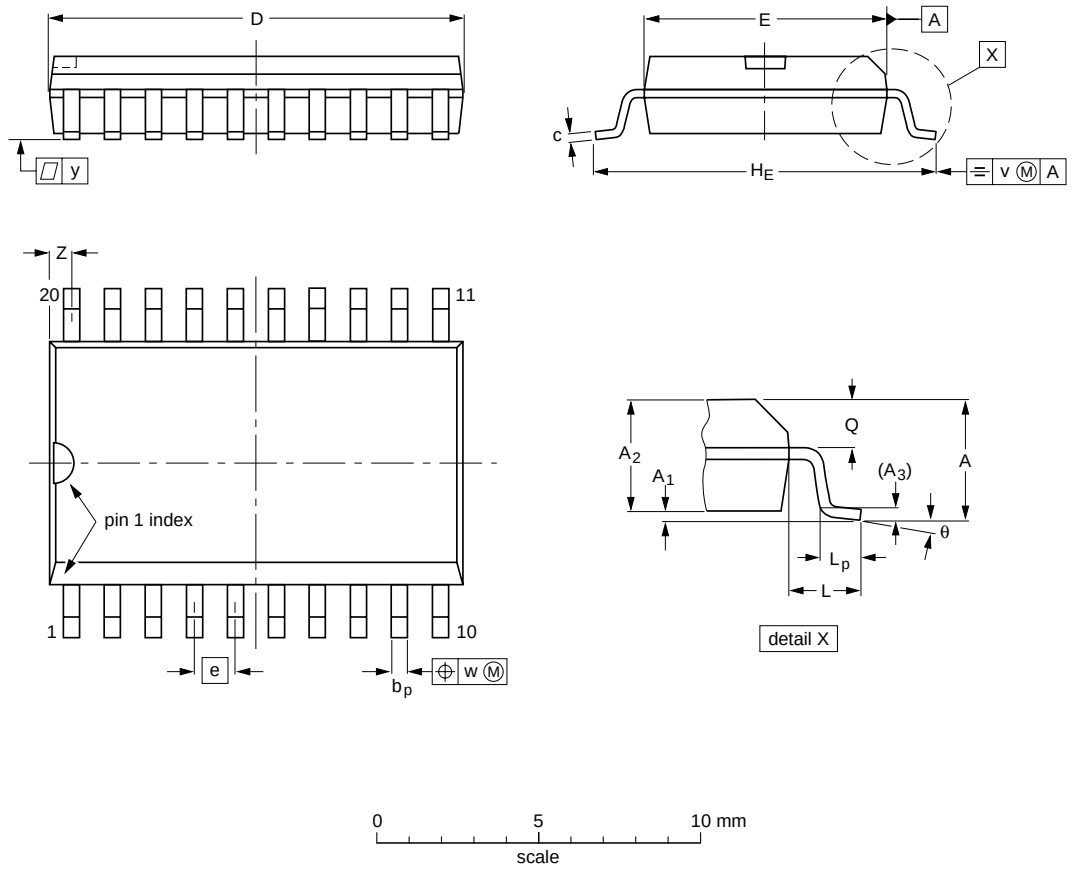

DIMENSIONS (inch dimensions are derived from the original mm dimensions)

UNIT	A max.	A_1	A_2	A_3	b_p	c	D (1)	E (1)	e	H_E	L	L_p	Q	v	w	y	Z (1)	θ
mm	2.65	0.3 0.1	2.45 2.25	0.25	0.49 0.36	0.32 0.23	13.0 12.6	7.6 7.4	1.27	10.65 10.00	1.4	1.1 0.4	1.1 1.0	0.25	0.25	0.1	0.9 0.4	8° 0°
inches	0.1	0.012 0.004	0.096 0.089	0.01	0.019 0.014	0.013 0.009	0.51 0.49	0.30 0.29	0.05	0.419 0.394	0.055	0.043 0.016	0.043 0.039	0.01	0.01	0.004	0.035 0.016	

Note

1. Plastic or metal protrusions of 0.15 mm (0.006 inch) maximum per side are not included.

OUTLINE VERSION	REFERENCES				EUROPEAN PROJECTION	ISSUE DATE
	IEC	JEDEC	JEITA			
SOT163-1	075E04	MS-013				~~99-12-27~~ 03-02-19

Fig 10. Package outline SOT163-1 (SO20)

© Nexperia B.V. 2017. All rights reserved

TSSOP20: plastic thin shrink small outline package; 20 leads; body width 4.4 mm **SOT360-1**

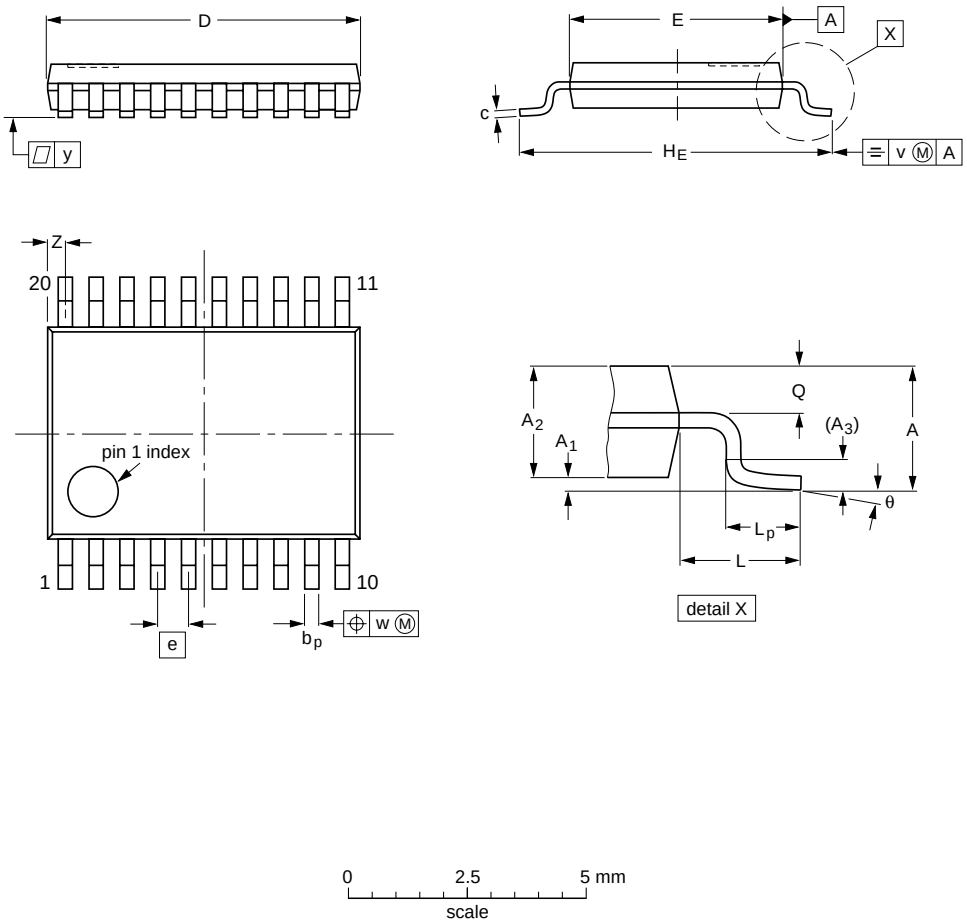

DIMENSIONS (mm are the original dimensions)

UNIT	A max.	A_1	A_2	A_3	b_p	c	D (1)	E (2)	e	H_E	L	L_p	Q	v	w	y	Z (1)	θ
mm	1.1	0.15 0.05	0.95 0.80	0.25	0.30 0.19	0.2 0.1	6.6 6.4	4.5 4.3	0.65	6.6 6.2	1	0.75 0.50	0.4 0.3	0.2	0.13	0.1	0.5 0.2	8° 0°

Notes

1. Plastic or metal protrusions of 0.15 mm maximum per side are not included.
2. Plastic interlead protrusions of 0.25 mm maximum per side are not included.

OUTLINE VERSION	REFERENCES				EUROPEAN PROJECTION	ISSUE DATE
	IEC	JEDEC	JEITA			
SOT360-1		MO-153				~~99-12-27~~ 03-02-19

Fig 11. Package outline SOT360-1 (TSSOP20)

© Nexperia B.V. 2017. All rights reserved

12. Abbreviations

Table 10. Abbreviations

Acronym	Description
CDM	Charged Device Model
CMOS	Complementary Metal-Oxide Semiconductor
DUT	Device Under Test
ESD	ElectroStatic Discharge
HBM	Human Body Model
LSTTL	Low-power Schottky Transistor-Transistor Logic
MM	Machine Model

13. Revision history

Table 11. Revision history

Document ID	Release date	Data sheet status	Change notice	Supersedes
74AHC_AHCT374_3	20080612	Product data sheet	-	74AHC_AHCT374_2
Modifications:	• The format of this data sheet has been redesigned to comply with the new identity guidelines of NXP Semiconductors. • Legal texts have been adapted to the new company name where appropriate. • Table 6: the conditions for input leakage current have been changed.			
74AHC_AHCT374_2	19990928	Product specification	-	74AHC_AHCT374_1
74AHC_AHCT374_1	19981211	Product specification	-	-

© Nexperia B.V. 2017. All rights reserved

14. Legal information

14.1 Data sheet status

Document status[1][2]	Product status[3]	Definition
Objective [short] data sheet	Development	This document contains data from the objective specification for product development.
Preliminary [short] data sheet	Qualification	This document contains data from the preliminary specification.
Product [short] data sheet	Production	This document contains the product specification.

[1] Please consult the most recently issued document before initiating or completing a design.

[2] The term 'short data sheet' is explained in section "Definitions".

[3] The product status of device(s) described in this document may have changed since this document was published and may differ in case of multiple devices. The latest product status information is available on the Internet at URL http://www.nexperia.com.

14.2 Definitions

Draft — The document is a draft version only. The content is still under internal review and subject to formal approval, which may result in modifications or additions. Nexperia does not give any representations or warranties as to the accuracy or completeness of information included herein and shall have no liability for the consequences of use of such information.

Short data sheet — A short data sheet is an extract from a full data sheet with the same product type number(s) and title. A short data sheet is intended for quick reference only and should not be relied upon to contain detailed and full information. For detailed and full information see the relevant full data sheet, which is available on request via the local Nexperia sales office. In case of any inconsistency or conflict with the short data sheet, the full data sheet shall prevail.

14.3 Disclaimers

General — Information in this document is believed to be accurate and reliable. However, Nexperia does not give any representations or warranties, expressed or implied, as to the accuracy or completeness of such information and shall have no liability for the consequences of use of such information.

Right to make changes — Nexperia reserves the right to make changes to information published in this document, including without limitation specifications and product descriptions, at any time and without notice. This document supersedes and replaces all information supplied prior to the publication hereof.

Suitability for use — Nexperia products are not designed, authorized or warranted to be suitable for use in medical, military, aircraft, space or life support equipment, nor in applications where failure or malfunction of a Nexperia product can reasonably be expected to result in personal injury, death or severe property or environmental damage. Nexperia accepts no liability for inclusion and/or use of Nexperia products in such equipment or applications and therefore such inclusion and/or use is at the customer's own risk.

Applications — Applications that are described herein for any of these products are for illustrative purposes only. Nexperia makes no representation or warranty that such applications will be suitable for the specified use without further testing or modification.

Limiting values — Stress above one or more limiting values (as defined in the Absolute Maximum Ratings System of IEC 60134) may cause permanent damage to the device. Limiting values are stress ratings only and operation of the device at these or any other conditions above those given in the Characteristics sections of this document is not implied. Exposure to limiting values for extended periods may affect device reliability.

Terms and conditions of sale — Nexperia products are sold subject to the general terms and conditions of commercial sale, as published at http://www.nexperia.com/profile/terms, including those pertaining to warranty, intellectual property rights infringement and limitation of liability, unless explicitly otherwise agreed to in writing by Nexperia. In case of any inconsistency or conflict between information in this document and such terms and conditions, the latter will prevail.

No offer to sell or license — Nothing in this document may be interpreted or construed as an offer to sell products that is open for acceptance or the grant, conveyance or implication of any license under any copyrights, patents or other industrial or intellectual property rights.

14.4 Trademarks

Notice: All referenced brands, product names, service names and trademarks are the property of their respective owners.

15. Contact information

For more information, please visit: **http://www.nexperia.com**

For sales office addresses, please send an email to: **salesaddresses@nexperia.com**

© Nexperia B.V. 2017. All rights reserved

16. Contents

1 General description 1
2 Features 1
3 Ordering information 2
4 Functional diagram 2
5 Pinning information 4
5.1 Pinning 4
5.2 Pin description 4
6 Functional description 5
7 Limiting values 5
8 Recommended operating conditions 6
9 Static characteristics 6
10 Dynamic characteristics 8
10.1 Waveforms 10
11 Package outline 13
12 Abbreviations 15
13 Revision history 15
14 Legal information 16
14.1 Data sheet status 16
14.2 Definitions 16
14.3 Disclaimers 16
14.4 Trademarks 16
15 Contact information 16
16 Contents 17

© Nexperia B.V. 2017. All rights reserved

For more information, please visit: http://www.nexperia.com
For sales office addresses, please send an email to: salesaddresses@nexperia.com
Date of release: 12 June 2008