Jul.1.2019 Copyright 2019 HIROSE ELECTRIC CO., LTD. All Rights Reserved.
In case of consideration for using Automotive equipment / device which demand high reliability, kindly contact our sales window correspondents.

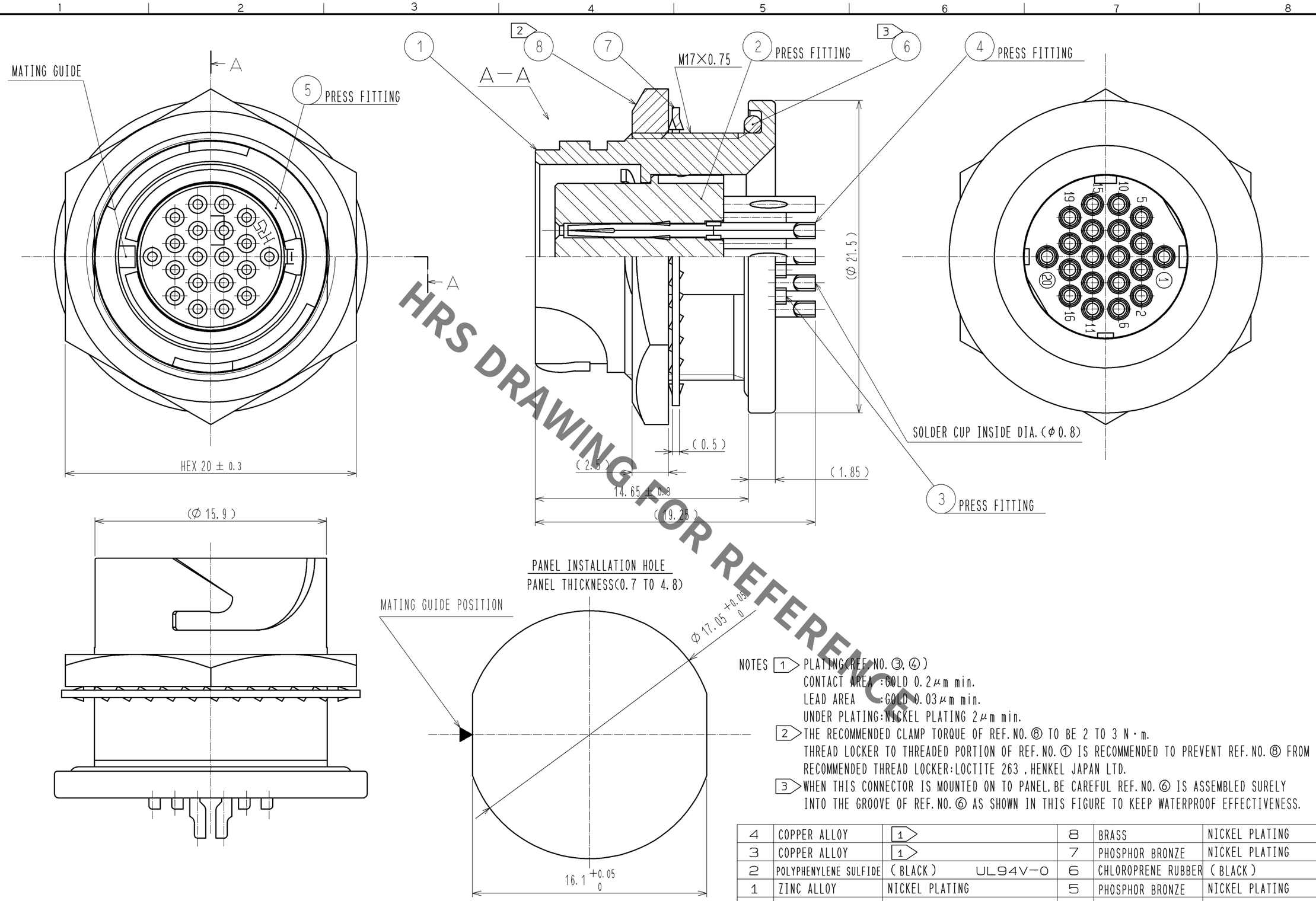

HRS DRAWING FOR REFERENCE

NOTES 1 PLATING(REF.NO.③,④)
CONTACT AREA :GOLD 0.2μm min.
LEAD AREA :GOLD 0.03μm min.
UNDER PLATING:NICKEL PLATING 2μm min.

2 THE RECOMMENDED CLAMP TORQUE OF REF.NO.⑧ TO BE 2 TO 3 N・m.
THREAD LOCKER TO THREADED PORTION OF REF.NO.① IS RECOMMENDED TO PREVENT REF.NO.⑧ FROM LOOSING.
RECOMMENDED THREAD LOCKER:LOCTITE 263 , HENKEL JAPAN LTD.

3 WHEN THIS CONNECTOR IS MOUNTED ON TO PANEL, BE CAREFUL REF.NO.⑥ IS ASSEMBLED SURELY INTO THE GROOVE OF REF.NO.⑥ AS SHOWN IN THIS FIGURE TO KEEP WATERPROOF EFFECTIVENESS.

NO.	MATERIAL	FINISH , REMARKS	NO.	MATERIAL	FINISH , REMARKS
4	COPPER ALLOY	1	8	BRASS	NICKEL PLATING
3	COPPER ALLOY	1	7	PHOSPHOR BRONZE	NICKEL PLATING
2	POLYPHENYLENE SULFIDE	(BLACK) UL94V-0	6	CHLOROPRENE RUBBER	(BLACK)
1	ZINC ALLOY	NICKEL PLATING	5	PHOSPHOR BRONZE	NICKEL PLATING

UNITS	SCALE	COUNT	DESCRIPTION OF REVISIONS	DESIGNED	CHECKED	DATE
mm	4 : 1	△				

HRS HIROSE ELECTRIC CO., LTD.

APPROVED	: SU. OBARA	12. 06. 27	DRAWING NO.	EDC3-117933-00
CHECKED	: TP. KOMATSU	12. 06. 27	PART NO.	LF13WBRB-20S
DESIGNED	: WR. AJIRO	12. 06. 27	CODE NO.	CL136-1018-0-00
DRAWN	: WR. AJIRO	12. 06. 27		△ 1/1

FORM HC0011-5-7