3M™ Color Coded Flat Cable

.050" 28 AWG Stranded, PVC

3302 Series

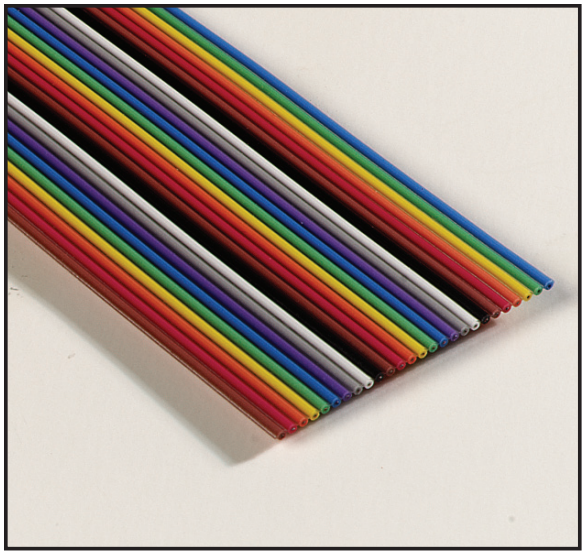

- 28 AWG wire on .050 inch centers permits mass termination to a broad line of IDC connectors
- Stranded wire provides flexibility and extended product life
- Zippable for branching or discrete termination
- Color coded for wire identification
- RoHS Compliant. See the Regulatory Information Appendix (RIA) in the "RoHS compliance" section of www.3Mconnectors.com for compliance information (RIA E1 & C1 apply)

Date Modified: May 1, 2012

TS-0123-C
Sheet 1 of 2

Physical

Insulation:

Material: Polyvinyl Chloride (PVC)

Color: 10 Color Repeat, Clear Carrier

Marking:

Standard: None

Canadian Option: AWM 20462 105C 300V VW1 3M NU C AWM IA 80C 150V FT1 EU <50V

Conductors: 28 AWG, 7 × 36 AWG [7 × Ø 0.127] Tinned Stranded Copper

Electrical

Voltage Rating: USA: 300V Canada: 150V EU: <50V

Insulation Resistance: > 1×10^9 Ω/10 ft. [3 m]

Characteristic Impedance: **Unbalanced**
105 Ω

Capacitance: 14.1 pF/ft [46.3 pF/m]

Inductance: 0.15 µH/ft [0.49 µH/m]

Propagation Delay: 1.47 ns/ft [4.82 ns/m]

Velocity of Propagation: 69%

Note: Unbalanced is measured between ground-signal-ground conductors.

Environmental

Temperature Rating: USA: -20°C to +105°C Canada: -20°C to +80°C

Flammability Rating: USA: VW-1 Canada: FT1

UL File No.: E42769, Style No: 20462

3M is a trademark of 3M Company.

3M™ Color Coded Flat Cable

.050" 28 AWG Stranded, PVC

3302 Series

(OPTIONAL)

Number of Conductors	3M Part Number	Dimension A	Dimension B
09	3302/09	0.450 ± .015 [11.43]	0.400 ± .010 [10.18]
10	3302/10	0.500 ± .015 [12.70]	0.450 ± .010 [11.43]
14	3302/14	0.700 ± .015 [17.78]	0.650 ± .010 [16.51]
15	3302/15	0.750 ± .015 [19.05]	0.700 ± .010 [17.78]
16	3302/16	0.800 ± .020 [20.32]	0.750 ± .015 [19.05]
18	3302/18	0.900 ± .020 [22.86]	0.850 ± .015 [21.59]
20	3302/20	1.000 ± .020 [25.40]	0.950 ± .015 [24.13]
24	3302/24	1.200 ± .020 [30.48]	1.150 ± .015 [29.21]
25	3302/25	1.250 ± .020 [31.75]	1.200 ± .015 [30.48]
26	3302/26	1.300 ± .020 [33.02]	1.250 ± .015 [31.75]
30	3302/30	1.500 ± .025 [38.10]	1.450 ± .020 [36.83]
34	3302/34	1.700 ± .025 [43.18]	1.650 ± .020 [41.91]
36	3302/36	1.800 ± .025 [45.72]	1.750 ± .020 [44.45]
37	3302/37	1.850 ± .025 [46.99]	1.800 ± .020 [45.72]
40	3302/40	2.000 ± .025 [50.80]	1.950 ± .020 [49.53]
50	3302/50	2.500 ± .025 [63.50]	2.450 ± .020 [62.23]
60	3302/60	3.000 ± .025 [76.20]	2.950 ± .020 [74.93]
64	3302/64	3.200 ± .025 [81.28]	3.150 ± .020 [80.01]

Inch
[mm]

Tolerance Unless Noted			
	.0	.00	.000
Inch	±.1	±.01	±.005

[ ] Dimensions for Reference Only

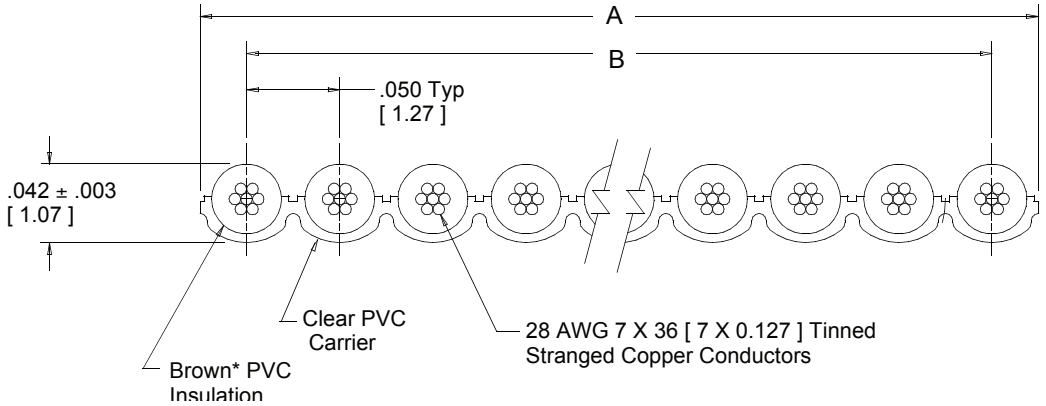

* 10 Color Repeat
Brown
Red
Orange
Yellow
Green
Blue
Violet
Gray
White
Black

Ordering Information

3302/XX XXC

Blank = Standard
C = Canadian Certified Version

Number of Conductors
(See Table)

Blank = Standard
SF = Splice Free

Note:
Available in standard lengths of 100 feet or 300 feet per roll, please specify when ordering..

TS-0123-C
Sheet 2 of 2

Important Notice

All statements, technical information, and recommendations related to 3M's products are based on information believed to be reliable, but the accuracy or completeness is not guaranteed. Before using this product, you must evaluate it and determine if it is suitable for your intended application. You assume all risks and liability associated with such use. Any statements related to the product which are not contained in 3M's current publications, or any contrary statements contained on your purchase order shall have no force or effect unless expressly agreed upon, in writing, by an authorized officer of 3M.

Warranty; Limited Remedy; Limited Liability.

This product will be free from defects in material and manufacture for a period of one (1) year from the time of purchase. **3M MAKES NO OTHER WARRANTIES INCLUDING, BUT NOT LIMITED TO, ANY IMPLIED WARRANTY OF MERCHANTABILITY OR FITNESS FOR A PARTICULAR PURPOSE.** If this product is defective within the warranty period stated above, your exclusive remedy shall be, at 3M's option, to replace or repair the 3M product or refund the purchase price of the 3M product. **Except where prohibited by law, 3M will not be liable for any indirect, special, incidental or consequential loss or damage arising from this 3M product, regardless of the legal theory asserted.**

3M Electronics Solutions Division
6801 River Place Blvd.
Austin, TX 78726-9000
U.S.A.
1-800-225-5373
www.3Mconnectors.com

3M is a trademark of 3M Company.

Please recycle. Printed in USA.
© 3M 2012. All rights reserved.
RIA-2217B-E