THIS COPY IS PROVIDED ON A RESTRICTED BASIS AND IS NOT TO BE USED IN ANY WAY DETRIMENTAL TO THE INTERESTS OF PANDUIT CORP.

| | |
|---|---|
| Material | High Conductivity Seamless Copper Tube |
| Plating | Electro-Tin |
| Wire Size & Type | Stranded Copper Flex Cable; 313.1 kcmil (775/24) Diesel Locomotive, 300 kcmil Class K & Class M |
| Wire Strip Length | 1-3/4 in. |
| Stud Size | 5/8 in. |
| UL Listed Wire Connector | Yes, for applications up to 35kv. Consult cable manufacturer for voltage stress relief instructions with applications greater than 2000 volts. |
| UL Temperature Rating | 90° C |
| C.S.A Certified Wire Connector | Yes |
| Panduit Color Code on Barrel | RED |
| Panduit Die Index No. on Barrel | P71 |
| Alternate Industry Die Index No. ( ) on Barrel | (18) |

CERTIFIED

LISTED
Wire Connector

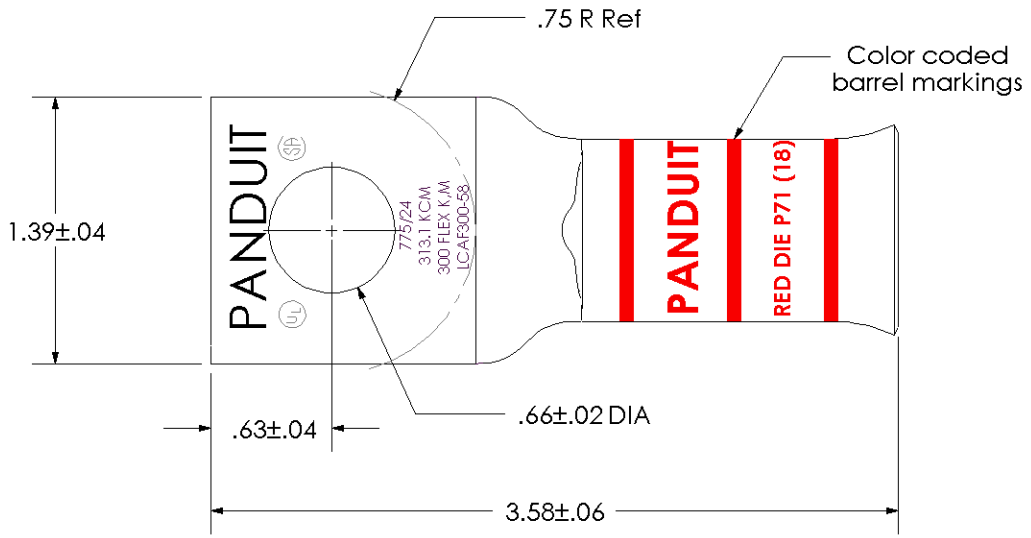


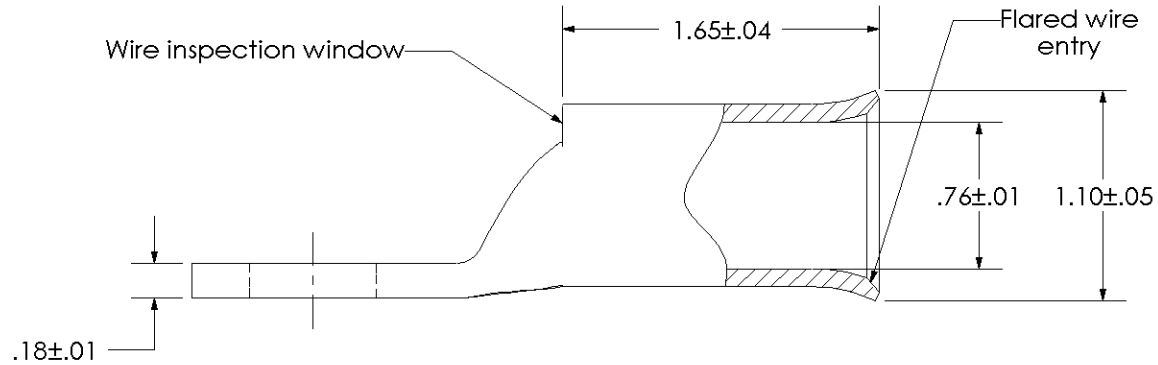


| REV | DATE | BY | CHK | DESCRIPTION | ECN |
|---|---|---|---|---|---|
| 00 | 9/02 | SAB | DRL | RELEASED | 10321 |

PANDUIT CORP. TINLEY PARK, ILLINOIS

LCAF300-58-6
Copper Lug - One-Hole, Flared Barrel

SCALE N/A

DRAWING NO / CAD FILE LCAF300-58-CUST