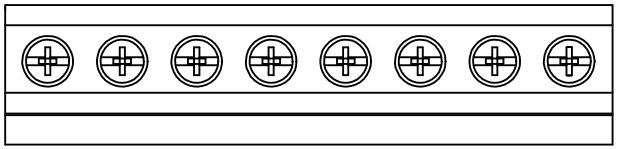

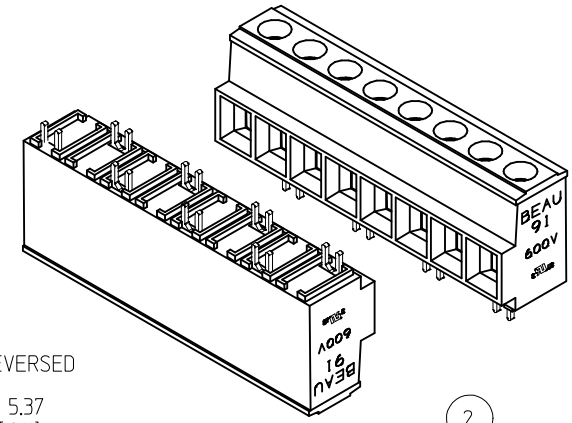

RECOMMENDED PTH PATTERN

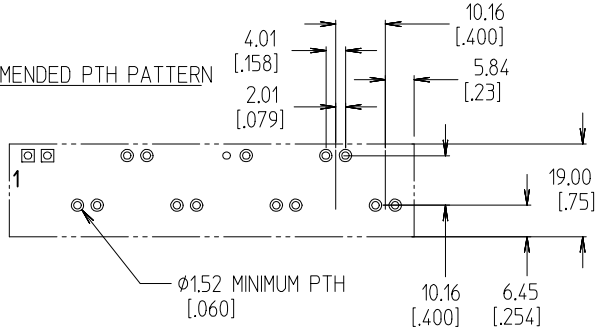

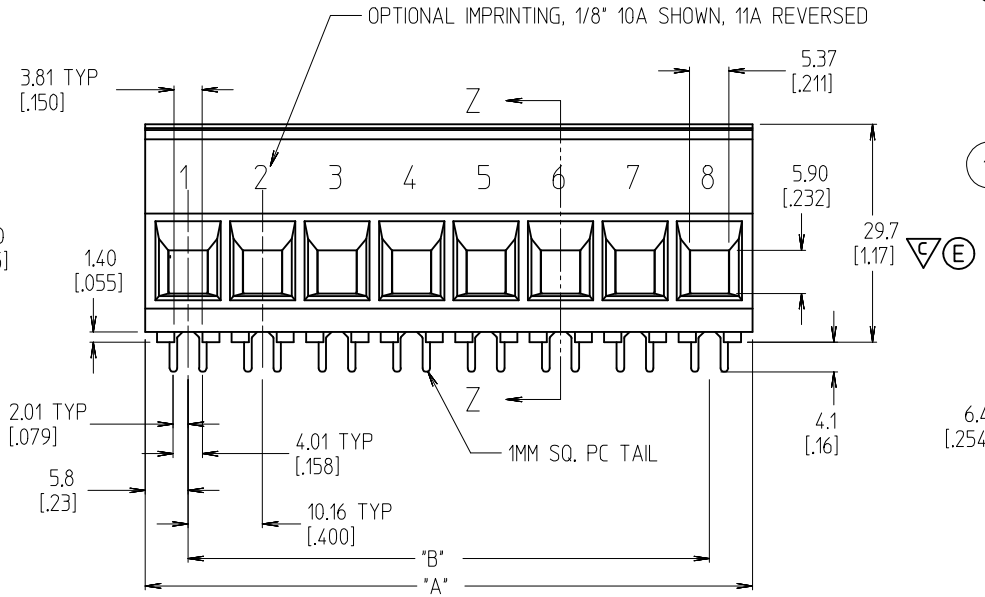

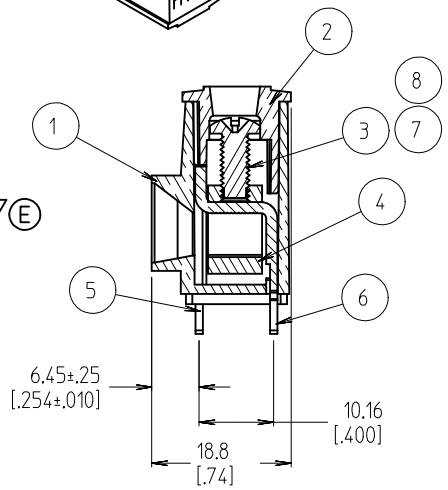

SECTION Z-Z

NOTES:

1. MATERIAL: SEE TABLE
2. FINISHES: SEE TABLE
3. PART IS DESIGNED TO MEET UL 1059 CLASS C 600V, 60A
4. STAGGERED PC TAIL POSITION ON ALTERNATE CIRCUITS
5. "XX" REFERS TO NUMBER OF CIRCUITS
6. FOR OPTIONAL IMPRINTING, REFER TO SD-38120-005.
7. ASSEMBLY IS ROHS COMPLIANT BY EXEMPTION.
   COMPONENTES MARKED WITH AN ASTERISK (*) ARE ROHS COMPLIANT BY EXEMPTION, ALL OTHER ARE ROHS COMPLIANT.

ITEM	QTY.	DESCRIPTION	MATERIAL	FINISH
8	XX	SCREW, M4 X 0.7 POZI-SLOT	ST. STEEL	PASSIVATED
7	XX	SCREW, M4 X 0.7 SLOTTED	BRONZE	TIN
6	A/R	REAR TERMINAL	COPPER	TIN
5	A/R	FRONT TERMINAL	COPPER	TIN
4	XX	CAGE (*)	BRASS	NICKEL
3	XX	SCREW, M4 X 0.7 POZI-SLOT	BRONZE	TIN
2	1	COVER	THERMOPLASTIC	BLACK
1	1	BODY	THERMOPLASTIC	BLACK

REV	DESCRIPTION
E	ADD CTQ. DIM. EC NO: IPG2013-1881 DRWN: ENC INAS 2013/09/19 CH'KD: JMACNEIL 2013/09/19 APPR: JMACNEIL 2013/09/24

QUALITY SYMBOLS
▼=0
C=1

GENERAL TOLERANCES (UNLESS SPECIFIED)

	mm	INCH
4 PLACES	± ---	± ---
3 PLACES	± ---	± .005
2 PLACES	± 0.13	± .01
1 PLACE	± 0.3	± ---
ANGULAR ± 2 °		

DRAFT WHERE APPLICABLE MUST REMAIN WITHIN DIMENSIONS

DIMENSION STYLE: MM/IN
SCALE: 3:2
DESIGN UNITS: INCH
THIRD ANGLE PROJECTION

DRAWN BY: GHR DATE: 2000/09/13
CHECKED BY: R. KEMP DATE: 2002/09/13
APPROVED BY: L. ROTHAUS DATE: 2002/09/27

TITLE: SR BTS 6 AWG, 600V 60A

MOLEX INCORPORATED

MATERIAL NO.: SEE SHT. 2
DOCUMENT NO.: SD-39910-001
SHEET NO.: 1 OF 2
SIZE: B

THIS DRAWING CONTAINS INFORMATION THAT IS PROPRIETARY TO MOLEX INCORPORATED AND SHOULD NOT BE USED WITHOUT WRITTEN PERMISSION

NO. OF CIRCUITS	DIM. "A" mm	DIM. "A" in	DIM. "B" mm	DIM. "B" in	MATERIAL NUMBER STANDARD	OPTIONAL 10A IMPRINT	OPTIONAL 11A IMPRINT	OPTIONAL SLOTTED SCREW	OPTIONAL SLOTTED SCREW W/10A IMPRINT	OPTIONAL SLOTTED SCREW W/11A IMPRINT	OPTIONAL STAINLESS STEEL SCREW
02	21.8	0.86	10.16	0.400	399100102	399120102	399130102	399100402	399120402	399130402	399100702
03	32.0	1.26	20.32	0.800	399100103	399120103	399130103	399100403	399120403	399130403	399100703
04	42.2	1.66	30.48	1.200	399100104	399120104	399130104	399100404	399120404	399130404	399100704
05	52.3	2.06	40.64	1.600	399100105	399120105	399130105	399100405	399120405	399130405	399100705
06	62.5	2.46	50.80	2.000	399100106	399120106	399130106	399100406	399120406	399130406	399100706
07	72.6	2.86	60.96	2.400	399100107	399120107	399130107	399100407	399120407	399130407	399100707
08	82.8	3.26	71.12	2.800	399100108	399120108	399130108	399100408	399120408	399130408	399100708
09	93.0	3.66	81.28	3.200	399100109	399120109	399130109	399100409	399120409	399130409	399100709
10	103.1	4.06	91.44	3.600	399100110	399120110	399130110	399100410	399120410	399130410	399100710
11	113.3	4.46	101.60	4.000	399100111	399120111	399130111	399100411	399120411	399130411	399100711
12	123.4	4.86	111.76	4.400	399100112	399120112	399130112	399100412	399120412	399130412	399100712
13	133.6	5.26	121.92	4.800	399100113	399120113	399130113	399100413	399120413	399130413	399100713
14	143.8	5.66	132.08	5.200	399100114	399120114	399130114	399100414	399120414	399130414	399100714

SEE SHEET 1
EC NO: IPG2013-1881
DRWN: ENCINAS 2013/09/19
CH'KD: JMACNEIL 2013/09/19
APPR: JMACNEIL 2013/09/24
DESCRIPTION
E
REV

QUALITY SYMBOLS
▼=0
▽=0

GENERAL TOLERANCES (UNLESS SPECIFIED)

	mm	INCH
4 PLACES	± ---	± ---
3 PLACES	± ---	± .005
2 PLACES	± 0.13	± .01
1 PLACE	± 0.3	± ---
ANGULAR ± 2 °		

DRAFT WHERE APPLICABLE MUST REMAIN WITHIN DIMENSIONS

DIMENSION STYLE: MM/IN
SCALE: 3:2
DESIGN UNITS: INCH
THIRD ANGLE PROJECTION

DRAWN BY: GHR DATE: 2000/09/13
CHECKED BY: R. KEMP DATE: 2002/09/13
APPROVED BY: L. ROTHAUS DATE: 2002/09/27

TITLE: SR BTS 6 AWG, 600V 60A

molex MOLEX INCORPORATED

MATERIAL NO.: SEE CHART
DOCUMENT NO.: SD-39910-001
SHEET NO.: 2 OF 2
SIZE: B

THIS DRAWING CONTAINS INFORMATION THAT IS PROPRIETARY TO MOLEX INCORPORATED AND SHOULD NOT BE USED WITHOUT WRITTEN PERMISSION